GALT JOINT UNION ELEMENTARY SCHOOL DISTRICT
VERNON E. GREER ELEMENTARY SCHOOL
RELOCATABLE BUILDINGS
02-122533
FILE NO.34-25
PROJECT TRACKING NO. 67348-26

AGENCY APPROVAL DSA# 02-122533
FILE NO. 39-24

IDENTIFICATION STAMP
DIV. OF THE STATE ARCHITECT
APP: 02-122533 INC:
REVIEWED FOR
SS ☑ FLS ☑ ACS ☑
DATE: 05/22/2024

1715 R STREET, SUITE 200
SACRAMENTO, CA 95811
TEL (916) 786-8178

CONSULTANTS

CIVIL ENGINEER
WARREN CONSULTING ENGINEERING, INC.
1117 Windfield Way, Suite 110
El Dorado Hills, CA 95762
TEL (916)-985-1870

PLUMBING ENGINEER
WESTON & ASSOCIATES MECHANICAL ENGINEERS, INC.
601 University Avenue, Suite 260
Sacramento, CA 95825
TEL (916)-482-0820

ELECTRICAL ENGINEER
THE ENGINEERING ENTERPRISE
1305 Marina Village Parkway
Alameda, CA 94501
TEL (530)-927-5793

BUILDING MANUFACTURER
AMERICAN MODULAR SYSTEMS
787 Spreckels Avenue
Manteca, CA 95336
TEL (209)-825-1921

SYMBOLS

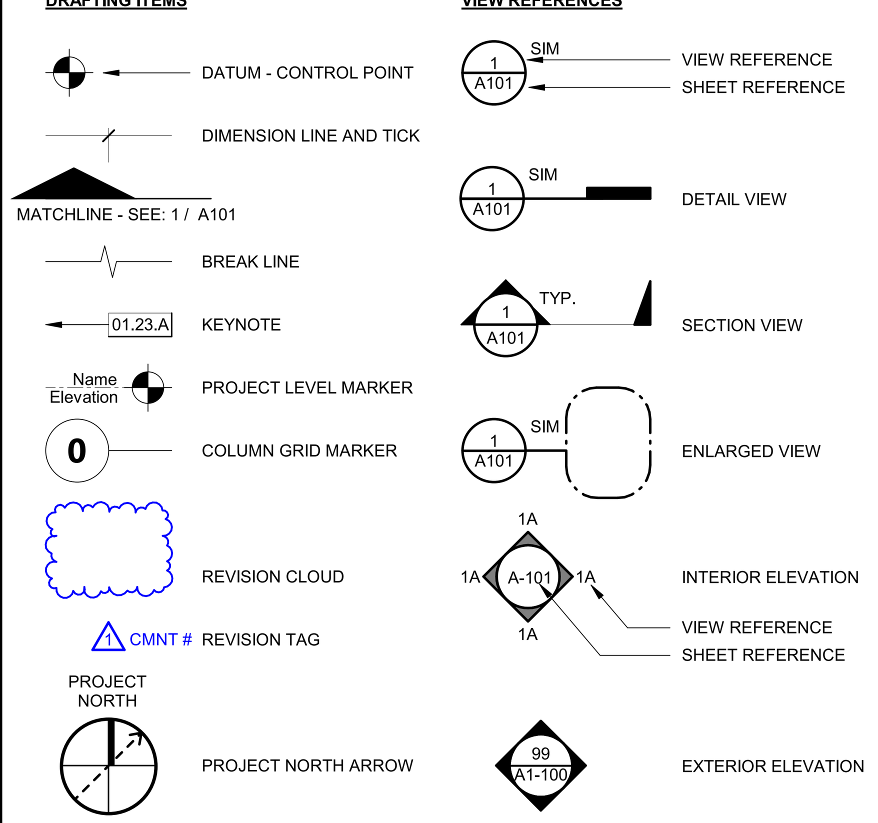

ABBREVIATIONS

@	AT
℄	CENTER LINE
d	PENNY
0#	POUND
⊥	PERPENDICULAR
∠	ANGLE
AB	ANCHOR BOLT
AC	ASPHALTIC CONCRETE
ACT	ACOUSTICAL CEILING TILE
AFF	ABOVE FINISH FLOOR
ALT	ALTERNATE
ALUM	ALUMINUM
ANOD	ANODIZED
APPROX	APPROXIMATE
ARCH	ARCHITECT OR ARCHITECTURAL
BD	BOARD
BLDG	BUILDING
BLK(G)	BLOCK(ING)
BOB	BOTTOM OF BEAM
BM	BEAM
CB	CATCH BASIN
CI	CAST IRON
CJ	CONSTRUCTION JOINT
CLG	CEILING
CLR	CLEAR
CMU	CONCRETE MASONRY UNIT
CO	CLEAN OUT
COL	COLUMN
CONC	CONCRETE
CONT	CONTINUOUS
CSK	COUNTERSINK
CW	COLD WATER
⊏	CHANNEL
DBL	DOUBLE
DEPT	DEPARTMENT
DET	DETAIL
DF	DRINKING FOUNTAIN
DIA	DIAMETER
DIAG	DIAGONAL
DN	DOWN
DS	DOWNSPOUT
DWG	DRAWING
E	EAST
(E)	EXISTING
EB	EXPANSION BOLT
EJ	EXPANSION JOINT
ELEV	ELEVATION
ELEC	ELECTRIC(AL)
EP	EDGE OF PAVING
EQ	EQUAL
EQUIP	EQUIPMENT
FD	FLOOR DRAIN
FE(C)	FIRE EXTINGUISHER (& CABINET)
FF	FINISHED FLOOR
FG	FINISHED GRADE
FH	FLAT HEAD OR FIRE HYDRANT
FIN	FINISH
FL	FLOW LINE
FLG	FLASHING
FLR	FLOOR
FOC	FACE OF CONCRETE
FOF	FACE OF FINISH
FOM	FACE OF MASONRY
FOS	FACE OF STUD
FRP	FIBERGLASS REINFORCED PANEL
FT	FOOT OR FEET
FTG	FOOTING
GA	GAUGE
GALV	GALVANIZED
GB	GRAB BAR, GRADE BREAK
GL	GLASS
GLB	GLUE LAMINATED BEAM
GYP	GYPSUM
GWB	GYPSUM WALL BOARD
HB	HOSE BIBB
HDR	HEADER
HGT	HEIGHT
HORIZ	HORIZONTAL
HTR	HEATER
HVAC	HEATING/VENTILATING/AIR CONDITIONING

ID	INSIDE DIAMETER
INSUL	INSULATION OR INSULATED
INV	INVERT
LAV	LAVATORY
MATL	MATERIAL
MAX	MAXIMUM
MB	MACHINE BOLT
MECH	MECHANICAL
MFR	MANUFACTURE OR MANUFACTURER
MH	MAN HOLE
MIN	MINIMUM
MISC	MISCELLANEOUS
MO	MASONRY OPENING
N	NORTH
(N)	NEW
NIC	NOT IN CONTRACT
NO OR #	NUMBER
NTS	NOT TO SCALE
OC	ON CENTER
OD	OUTSIDE DIAMETER
OPNG	OPENING
PL	PLATE OR PROPERTY LINE
PLAM	PLASTIC LAMINATE
PLAS	PLASTER (NUMBER - SEE SPECS)
PLYWD	PLYWOOD
PNT	PAINT (NUMBER - SEE SPECS)
PTDF	PRESSURE TREATED DOUGLAS FUR
QT	QUARRY TILE
RD	ROOF DRAIN
REF	REFRIGERATOR
REINF	REINFORCE OR REINFORCING
RH	ROUND HEAD
RM	ROOM
RO	ROUGH OPENING
RWD	REDWOOD
S	SOUTH
SCH	SCHEDULE
SD	STORM DRAIN
SHR	SHOWER
SHT	SHEET
SHTHG	SHEATHING
SIM	SIMILAR
SMACNA	THE ARCH SHEET METAL MANUAL
SPEC	SPECIFICATION
SQ	SQUARE
SSTL	STAINLESS STEEL
STD	STANDARD
STL	STEEL
SUSP	SUSPENDED
SYM	SYMMETRICAL
TOB	TOP OF BEAM
TOC	TOP OF CURB OR TOP OF CONCRETE
TCB	TOP OF CATCH BASIN
TEL	TELEPHONE
TEMP	TEMPERATURE OR TEMPERED
T&G	TONGUE & GROOVE
TP	TOP OF PAVING
TS	STRUCTURAL TUBING
TV	TELEVISION
TOW	TOP OF WALL
TYP	TYPICAL (ITEMS TYPICAL UNLESS SHOWN OR NOTED OTHERWISE)
UON	UNLESS OTHERWISE NOTED
VCT	VINYL COMPOSITION TILE
VERT	VERTICAL
VGDF	VERTICAL GRAIN DOUGLAS FIR
VTR	VENT THRU ROOF
W	WEST
WC	WATER CLOSET
W.C.	WHEELCHAIR ACCESSIBLE
WD	WOOD
WF	WIDE FLANGE
WH	WATER HEATER
WP	WATERPROOF
WS	WOOD SCREW
WSCT	WAINSCOT
WWF	WELDED WIRE FABRIC
W/	WITH
W/O	WITHOUT

GENERAL PROJECT NOTES

1. ALL WORK SHALL CONFORM TO 2022 TITLE 24 CALIFORNIA CODE OF REGULATIONS (CCR).
2. THE PROJECT MANUAL AND SPECIFICATIONS IN CONJUNCTION WITH THESE DRAWINGS AND REFERENCES SHALL FORM A PART OF THE CONTRACT AND SHALL BE REFERRED TO AS THE "DOCUMENTS." THE DOCUMENTS DEFINE THE WORK TO BE PERFORMED AS AGREED TO IN THE CONTRACT
3. CHANGES TO APPROVED DRAWINGS AND SPECIFICATIONS SHALL BE MADE BY AN ADDENDUM OR A CONSTRUCTION CHANGE DOCUMENT (CCD) APPROVED BY THE DIVISION OF THE STATE ARCHITECT AS REQUIRED BY SECTION 4-338, PART 1, T24 CCR.
4. A DSA CERTIFIED **INSPECTOR CLASS 3** SHALL BE EMPLOYED BY THE DISTRICT AND SHALL PROVIDE CONTINUOUS INSPECTION OF THE WORK. THE DUTIES OF THE INSPECTION ARE DEFINED IN SECTION 4-342, PART 1, T24, CCR.
5. APPARENT DISCREPANCIES ON DRAWINGS AND/OR SPECIFICATIONS SHALL BE REPORTED TO THE ARCHITECT BEFORE PROCEEDING WITH THE WORK.
6. ANY DIFFERENCE BETWEEN THE EXISTING CONSTRUCTION AS OBSERVED IN THE FIELD AND AS SHOWN ON THE DRAWING SHALL BE REPORTED TO THE ARCHITECT BEFORE PROCEEDING WITH THE WORK.
7. THE CONTRACTOR SHALL VERIFY ALL DIMENSIONS PRIOR TO STARTING WORK. THE ARCHITECT SHALL BE NOTIFIED OF ANY DISCREPANCIES OR INCONSISTENCIES. THE CONTRACTOR IS RESPONSIBLE FOR CHECKING AND COORDINATING DIMENSIONS.
8. IT SHALL BE THE RESPONSIBILITY OF THE GENERAL CONTRACTOR TO ENSURE THAT ALL APPLICABLE SAFETY LAWS ARE STRICTLY ENFORCED AND TO MAINTAIN A SAFE CONSTRUCTION PROJECT.
9. IT SHALL BE THE RESPONSIBILITY OF THE GENERAL CONTRACTOR TO PROVIDE SUPERVISION OF THE CONSTRUCTION WORK TO ENSURE THAT IT IS BUILT IN CONFORMANCE WITH THE APPROVED PLANS AND SPECIFICATIONS. THE ARCHITECT WILL PROVIDE ONLY PERIODIC OBSERVATION OF THE WORK. SEE NOTE 4 FOR DSA INSPECTION REQUIREMENTS.
10. ANY DAMAGE DONE TO THE EXISTING CONSTRUCTION DURING THE COURSE OF THIS WORK SHALL BE REPLACED BY THE CONTRACTOR AT THE CONTRACTOR'S EXPENSE WITH NO ADDITIONAL COST TO THE OWNER.
11. GRADING PLANS, DRAINAGE IMPROVEMENTS, ROAD & ACCESS REQUIREMENTS AND ENVIRONMENTAL HEALTH CONSIDERATIONS SHALL COMPLY WITH ALL LOCAL ORDINANCES.
12. THE SEISMIC ANCHORAGE OF MECHANICAL AND ELECTRICAL EQUIPMENT SHALL CONFORM TO CCR TITLE 24, 2022 CBC SECTION 1616A.1.18 AND ASCE-7-16 SECTION 13.6 ANCHORAGE DETAILS FOR ROOF/FLOOR MOUNTED EQUIPMENT SHALL BE SHOWN ON PLANS.
13. CUTTING, BORING, SAW CUTTING OR DRILLING THROUGH THE NEW OR EXISTING STRUCTURAL ELEMENTS TO BE DONE ONLY WHEN SO DETAILED IN THE DRAWINGS OR ACCEPTED BY THE ARCHITECT AND THE STRUCTURAL ENGINEER WITH THE APPROVAL OF DSA REPRESENTATIVE. ALL WELDING SHALL BE SPECIALLY INSPECTED BY AN AWS-CWI QUALIFIED INSPECTOR APPROVED BY DSA. ALL BRACING OF DUCTS AND PIPING SHALL BE INSTALLED AS APPROVED BY DSA. WHERE BRACING DETAILS ARE NOT SHOWN ON THE DRAWINGS, THE FIELD INSTALLATION SHALL BE SUBJECT TO THE APPROVAL OF THE ARCHITECT, MECHANICAL ENGINEER AND FIELD ENGINEER. A COPY OF THE DRAWINGS APPROVED BY DSA SHALL BE PROVIDED BY THE CONTRACTOR AND KEPT ON THE JOB AT ALL TIMES.
14. THE INTENT OF THESE DRAWINGS AND SPECIFICATIONS IS THAT THE WORK OF THE ALTERATION, REHABILITATION OR RECONSTRUCTION IS TO BE IN ACCORDANCE WITH TITLE 24, CALIFORNIA CODE OF REGULATIONS. SHOULD ANY EXISTING CONDITIONS SUCH AS DETERIORATION OR NON-COMPLYING CONSTRUCTION BE DISCOVERED WHICH IS NOT COVERED BY THE CONTRACT DOCUMENTS WHEREIN THE FINISHED WORK WILL NOT COMPLY WITH TITLE 24, CALIFORNIA CODE OF REGULATIONS, A CONSTRUCTION CHANGE DOCUMENT, OR A SEPARATE SET OF PLANS AND SPECIFICATIONS, DETAILING AND SPECIFYING THE REQUIRED WORK SHALL BE SUBMITTED TO AND APPROVED BY THE DIVISION OF THE STATE ARCHITECT BEFORE PROCEEDING WITH THE WORK.
15. A DSA ACCEPTED TESTING LABORATORY DIRECTLY EMPLOYED BY THE SCHOOL DISTRICT (OWNER) SHALL CONDUCT ALL THE REQUIRED TESTS AND INSPECTIONS FOR THE PROJECT.
16. IT SHALL BE THE RESPONSIBILITY OF THE GENERAL CONTRACTOR TO COMPLY WITH CFC CHAPTER 33 - FIRE SAFETY DURING CONSTRUCTION AND DEMOLITION.
17. DO NOT SCALE DRAWINGS, DIMENSIONS SHOWN SHALL TAKE PRECEDENCE OVER DRAWING SCALE. WHENEVER DSA FINDS ANY CONSTRUCTION WORK IS BEING PERFORMED IN A MANNER CONTRARY TO THE PROVISIONS OF THE CALIFORNIA BUILDING CODE AND THAT WOULD COMPROMISE THE STRUCTURAL INTEGRITY OF THE BUILDING, THE DEPARTMENT OF GENERAL SERVICES, STATE OF CALIFORNIA, IS AUTHORIZED TO ISSUE A STOP WORK ORDER PER SECTION 4-334.1 CALIFORNIA ADMINISTRATIVE CODE (PART 1, TITLE 24, CCR).
18. TITLE 24 PARTS 1-5 AND 9 MUST BE KEPT ON SITE DURING CONSTRUCTION
19. ALL STRUCTURAL, ARCHITECTURAL, MECHANICAL, ELECTRICAL, AND PLUMBING MATERIALS INSTALLATION TO COMPLY WITH APPLICABLE CODES, STANDARDS, AND MANUFACTURER'S RECOMMENDATIONS.
20. PROJECT INSPECTION (PI) SHALL WITNESS AND VERIFY GROUNDING.
21. **DETERIORATION OR EXISTING NON-COMPLIANT CONSTRUCTION:** IF ANY CONDITION IS DISCOVERED WHICH, IF LEFT UNCORRECTED, WOULD MAKE THE BUILDING NON-COMPLIANT WITH THE REQUIREMENTS OF THE EDITION OF CBC IN FORCE AT THE TIME OF ORIGINAL CONSTRUCTION, THE CONDITION MUST BE CORRECTED IN ACCORDANCE WITH CURRENT CODE REQUIREMENTS. A CONSTRUCTION CHANGE DOCUMENT (CCD-TYPE A), OR A SEPARATE SET OF PLANS AND SPECIFICATIONS DETAILING AND SPECIFYING THE REQUIRED REPAIR WORK SHALL BE SUBMITTED TO AND APPROVED BY DSA BEFORE PROCEEDING WITH THE REPAIR WORK.
22. NEW BUILDINGS SHALL BE PROVIDED WITH EMERGENCY RESPONDER RADIO COVERAGE IN ACCORDANCE WITH CALIFORNIA FIRE CODE SECTION 510. THE PROJECT ARCHITECT (AOR) SHALL CONTACT THE LOCAL FIRE DEPARTMENT AND/OR EMERGENCY COMMUNICATIONS AUTHORITY TO OBTAIN DESIGN, EQUIPMENT SPECIFICATIONS, TESTING AND ACCEPTANCE CRITERIA. PLANS AND REQUESTED DOCUMENTATION SHALL BE SUBMITTED TO THE LOCAL AUTHORITY HAVING JURISDICTION FOR REVIEW AND APPROVAL. UPON COMPLETION, COPIES OF THE APPROVED PLANS, EQUIPMENT DATE SHEETS, TESTING AND ACCEPTANCE DOCUMENTATION SHALL BE PROVIDED TO THE SCHOOL DISTRICT.
23. THE CALIFORNIA ENERGY CODE SECTION 10-103 REQUIRES ACCEPTANCE TESTING ON ALL NEWLY INSTALLED LIGHTING CONTROLS, MECHANICAL SYSTEMS, ENVELOPES, AND PROCESSES EQUIPMENT AFTER INSTALLATION AND BEFORE PROJECT COMPLETION. AN ACCEPTANCE TEST IS A FUNCTIONAL PERFORMANCE TEST TO HELP ENSURE THAT NEWLY INSTALLED EQUIPMENT IS OPERATING AND IN COMPLIANCE WITH THE ENERGY CODE.
24. LIGHTING CONTROLS ACCEPTANCE TESTS MUST BE PERFORMED BY A CERTIFIED LIGHTING CONTROLS ACCEPTANCE TEST TECHNICIAN (ATT).
25. MECHANICAL SYSTEM ACCEPTANCE TESTS MUST BE PERFORMED BY A CERTIFIED MECHANICAL ATT FOR PROJECTS SUBMITTED ON OR AFTER OCTOBER 1, 2021
26. ENVELOPE AND PROCESS EQUIPMENT ACCEPTANCE TESTS SHALL BE PERFORMED BY THE INSTALLING CONTRACTOR, ENGINEER/ARCHITECT OF RECORD, OR THE OWNER'S AGENT
27. A LISTING OF ATT CAN BE FOUND AT: HTTPS://WWW.ENERGY.CA.GOV/PROGRAMS-AND-TOPICS/PROGRAMS/ACCEPTANCE-TEST-TECHNICIAN-CERTIFICATION-PROVIDER-PROGRAM/ACCEPTANCE.
28. THE ACCEPTANCE TESTING PROCEDURES MUST BE REPEATED, AND DEFICIENCIES MUST BE CORRECTED BY THE BUILDER OR INSTALLING CONTRACTOR UNTIL THE CONSTRUCTION/INSTALLATION OF THE SPECIFIED SYSTEMS CONFORM AND PASS THE REQUIRED ACCEPTANCE CRITERIA.
29. PROJECT INSPECTORS WILL COLLECT THE FORMS TO CONFIRM THAT THE REQUIRED ACCEPTANCE TESTS HAVE BEEN COMPLETED.

PROJECT DESCRIPTION

THE PROPOSED PROJECT CONSISTS OF THE DEMOLITION AND OFF-HAULING OF TWO (2) EXISTING PORTABLE CLASSROOM BUILDINGS AND THEIR ASSOCIATED RAMPS AND WOOD FOUNDATIONS; THE INSTALLATION OF TWO (2) NEW 30X32 PC PORTABLE CLASSROOM BUILDINGS AND RAMPS AT THE SAME LOCATION WITH THE ASSOCIATED UTILITIES AND SITE WORK.

GENERAL BUILDING AREAS:

BLDG #	NAME			AREA
19	PC PORTABLE CLASSROOM BUILDING	DSA #04-122041 SERIAL #:	24-212-002 A 24-212-002 B 24-212-002 C	1126 SF
20	PC PORTABLE CLASSROOM BUILDING	DSA #04-122041 SERIAL #:	24-212-001 A 24-212-001 B 24-212-001 C	1126 SF

DEFERRED APPROVALS

NONE

APPLICABLE CODES AND STANDARDS

PARTIAL LIST OF APPLICABLE 2022 CODES AS OF JANUARY 1, 2023
ALL PARTS OF THE TITLE 24 CODE SHOWN BELOW HAVE AN EFFECTIVE DATE OF **JANUARY 1, 2023**
EXCEPT:
- CALIFORNIA ADMINISTRATIVE CODE - EFFECTIVE **MARCH 5, 2022**

CALIFORNIA ADMINISTRATIVE CODE (CAC) - CCR, TITLE 24, PART 1

CALIFORNIA BUILDING CODE (CBC) - CCR, TITLE 24, PART 2
(2021 INTERNATIONAL BUILDING CODE, VOL. 1 & 2, AND 2022 CALIFORNIA AMENDMENTS)

CALIFORNIA ELECTRICAL CODE (CEC) - CCR, TITLE 24, PART 3
(2021 NATIONAL ELECTRICAL CODE AND 2022 CALIFORNIA AMENDMENTS)

CALIFORNIA MECHANICAL CODE (CMC) - CCR, TITLE 24, PART 4
(2021 IAPMO UNIFORM MECHANICAL CODE AND 2022 CALIFORNIA AMENDMENTS

CALIFORNIA PLUMBING CODE (CPC) - CCR, TITLE 24, PART 5
(2021 IAPMO UNIFORM PLUMBING CODE AND 2022 CALIFORNIA AMENDMENTS)

CALIFORNIA ENERGY CODE (CEC) - CCR, TITLE 24, PART 6

CALIFORNIA FIRE CODE (CFC) - CCR, TITLE 24, PART 9
(2021 INTERNATIONAL FIRE CODE AND 2022 CALIFORNIA AMENDMENTS)

CALIFORNIA EXISTING BUILDING CODE (CEBC) - CCR, TITLE 24, PART 10

CALIFORNIA GREEN BUILDING STANDARDS CODE (CALGREEN) - CCR, TITLE 24, PART 11

CALIFORNIA REFERENCED STANDARDS CODE - CCR, TITLE 24, PART 12
(PUBLIC SAFETY, STATE FIRE MARSHAL REGULATIONS)

ASME A17.1/CSA B44-13 SAFETY CODE FOR ELEVATORS AND ESCALATORS *PER 2022 CBC PART 2 CH 35) - CAL/OSHA ELEVATOR UNIT ENFORCES CCR TITLE 8 AND USES THE 2004 ASME A17.1 BY ADOPTION*

PARTIAL LIST OF APPLICABLE STANDARDS AS OF JANUARY 1, 2023*

FOR A COMPLETE LIST OF APPLICABLE NFPA STANDARDS REFER TO 2022 CBC (SFM) CHAPTER 35 AND CALIFORNIA FIRE CODE CHAPTER 80. SEE CALIFORNIA BUILDING CODE CHAPTER 35 FOR STATE OF CALIFORNIA AMENDMENTS TO THE NFPA STANDARDS.

NFPA 10-21 - STANDARD FOR PORTABLE FIRE EXTINGUISHERS

NFPA 12-15 - STANDARD ON CARBON DIOXIDE EXTINGUISHING SYSTEMS

NFPA 12A-18 - STANDARD ON HALON 1301 FIRE EXTINGUISHING SYSTEMS

NFPA 13-22 - STANDARD FOR THE INSTALLATION OF SPRINKLER SYSTEMS (AS AMENDED)

NFPA 14-19 - STANDARD FOR THE INSTALLATION OF STANDPIPE AND HOSE SYSTEMS

NFPA 17-21 - STANDARD FOR DRY CHEMICAL EXTINGUISHING SYSTEMS

NFPA 17A-21 - STANDARD FOR WET CHEMICAL EXTINGUISHING SYSTEMS

NFPA 20-19 - STANDARD FOR THE INSTALLATION OF STATIONARY PUMPS FOR FIRE PROTECTION

NFPA 24-19 - STANDARD FOR THE INSTALLATION OF PRIVATE FIRE SERVICE MAINS AND THEIR APPURTENANCES (AS AMENDED)

NFPA 72-22 - NATIONAL FIRE ALARM AND SIGNALING CODE (AS AMENDED)

NFPA 80-19 - STANDARD FOR FIRE DOORS AND OTHER OPENING PROTECTIVES

ICC 300-17 - STANDARD FOR BLEACHERS, FOLDING AND TELESCOPIC SEATING, AND GRANDSTANDS

UL 300-2005(R2010) - STANDARD FOR FIRE TESTING OF FIRE EXTINGUISHING SYSTEMS FOR PROTECTION OF COMMERCIAL COOKING EQUIPMENT

UL 464-03 - AUDIBLE SIGNALING DEVICES FOR FIRE ALARM AND SIGNALING SYSTEMS, INCLUDING ACCESSORIES

UL 521-99 - STANDARD FOR HEAT DETECTORS FOR FIRE PROTECTIVE SIGNALING SYSTEMS

UL 1971-2002(R2010) - STANDARD FOR SIGNALING DEVICES FOR THE HEARING IMPAIRED

SHEET INDEX

SHEET # **SHEET NAME** **REV #** **DATE**

1. OVERALL GENERAL INFORMATION
G-001 TITLE SHEET
G-002 FIRE AUTHORITY SITE PLAN
GENERAL SHEETS TOTAL: 2

2. CIVIL ENGINEERING
C0.1 CIVIL GENERAL NOTES AND ABBREVIATIONS
C0.2 TOPOGRAPHIC SURVEY
C1.1 DEMOLITION PLAN PLAN
C1.2 ENGINEERED FILL PLAN
C2.1 GRADING PLAN
C3.1 UTILITY PLAN
C4.1 PAVING AND STRIPING PLAN
C5.1 DETAILS AND SECTIONS
CIVIL SHEETS TOTAL: 8

3. ARCHITECTURAL DRAWINGS
A-021 DEMOLITION FENCE PLAN AND ELEVATIONS
A-101 OVERALL SITE PLAN
A-102 ENLARGED SITE PLAN
A-111 DETAILS
A-301 EXTERIOR ELEVATIONS
ARCHITECTURAL SHEETS TOTAL: 5

4. ELECTRICAL ENGINEERING
E0.1 SYMBOLS LIST & SHEET INDEX
E0.2 POWER ONE-LINE DIAGRAM, RISERS & SCHEDULES
E1.1 ELECTRICAL SITE PLAN
E2.1 ELECTRICAL PLAN
E3.1 FIRE ALARM PLAN & RISER DIAGRAM
E3.2 FIRE ALARM DETAILS, SCHEDULES & NOTES
E4.1 ELECTRICAL DETAILS
ELECTRICAL SHEETS TOTAL: 7

5. PLUMBING ENGINEERING
P-001 PLUMBING LEGENDS SCHEDULES AND NOTES
P-101 PLUMBING SITE PLAN
P-201 PLUMBING FLOOR PLAN
PLUMBING SHEETS TOTAL: 3

6. PC DRAWINGS 04-122041
TS TITLE SHEET
TS2 SHEET INDEX
D1 FORM DSA-103
N1.0 GENERAL NOTES & SPECIFICATIONS
N2.0 GENERAL NOTES & SPECIFICATIONS
N3.0 TYPICAL SCHEDULES DOORS WINDOWS & FINISHES
N4.0 ACCESSIBILITY STANDARDS AND DETAILS
N5.0 MULTIPLE FLOOR PLAN CONFIGURATIONS
EN.1A ENERGY CALCULATIONS SUMMATION SHEET
EN.1B ENERGY CALCULATIONS SUMMATION SHEET
EN.1C ENERGY CALCULATIONS SUMMATION SHEET
EN.6 ENERGY CALCULATIONS 30x32 BUILDING - GROUP C
EN.7 ENERGY CALCULATIONS 30x32 BUILDING - GROUP C
EN.35 ENERGY CALCULATIONS - SUPPLEMENTAL SHEETS
EN.36 ENERGY CALCULATIONS - SUPPLEMENTAL SHEETS
EN.37 ENERGY CALCULATIONS - SUPPLEMENTAL SHEETS
EN.38 ENERGY CALCULATIONS - SUPPLEMENTAL SHEETS
EN.39 ENERGY CALCULATIONS - SUPPLEMENTAL SHEETS
A1.0 CLASSROOM FLOOR PLAN
A2.0 TYPICAL ROOF PLAN METAL STANDING SEAM
A2.2 TYPICAL ROOF DETAILS METAL STANDING SEAM
A4.0 INTERIOR ELEVATIONS TYPICAL CLASSROOM
A5.0 TYPICAL EXTERIOR ELECATION - DURATEMP VERTICAL GROOVE SIDING
A5.1 TYP. ARCHITECTURAL DETAILS - DURATEMP 303 SIDING OPTION
A6.0 TYPICAL LONGITUDINAL AND TRANSVERSE BUILDING SECTIONS
A7.1 MISCELLANEOUS ARCHITECTURAL DETAILS
S0.0 LIGHT GUAGE STEEL MEMBER PROPERTIES
S2.1 WOOD FOUNDATION PLAN 50 PSF LIVE LOAD + 15 PSF PARTITION LOAD
S2.4 WOOD FOUNDATION DETAILS
S3.0 FLOOR FRAMING PLAN & DETAILS FOR PLYWOOD FLOOR
S4.0 FLOOR FRAMING PLAN & DETAILS
S4.2 ROOF FRAMING DETAILS
S5.0 MOMENT FRAME ELEVATIONS & DETAILS
S5.1 MOMENT FRAME CONNECTION DETAILS
S8.0 WALL FRAMING ELEVATIONS & SCHEDULES - WOOD STUDS
S8.1 WALL FRAMING DETAILS - WOOD STUDS
S10.0 TYPICAL RAMP PLANS & NOTES
S10.1 RAMP DETAILS
M1.0 TYPICAL REFLECTED CEILING PLAN
M1.1 TYPICAL MECHANICAL PLAN OPTIONS
M1.4 MECHANICAL AND CEILING DETAILS
M1.5 MECHANICAL & CEILING DETAILS
M1.7 CEILING NOTES & SPECIFICATIONS
M1.7A MECHANICAL NOTES & SCHEDULES
E1.0 TYPICAL ELECTRICAL PLAN
E1.2 ELECTRICAL NOTES & DETAILS
P1.0 RESTROOM OPTION PLUMBING PLANS & FIXTURE SCHEDULE
P2.0 PLUMBING DETAILS & ACCESSIBLE DETAILS
PC DRAWINGS SHEETS TOTAL: 48
OVERALL SHEET TOTAL: 73

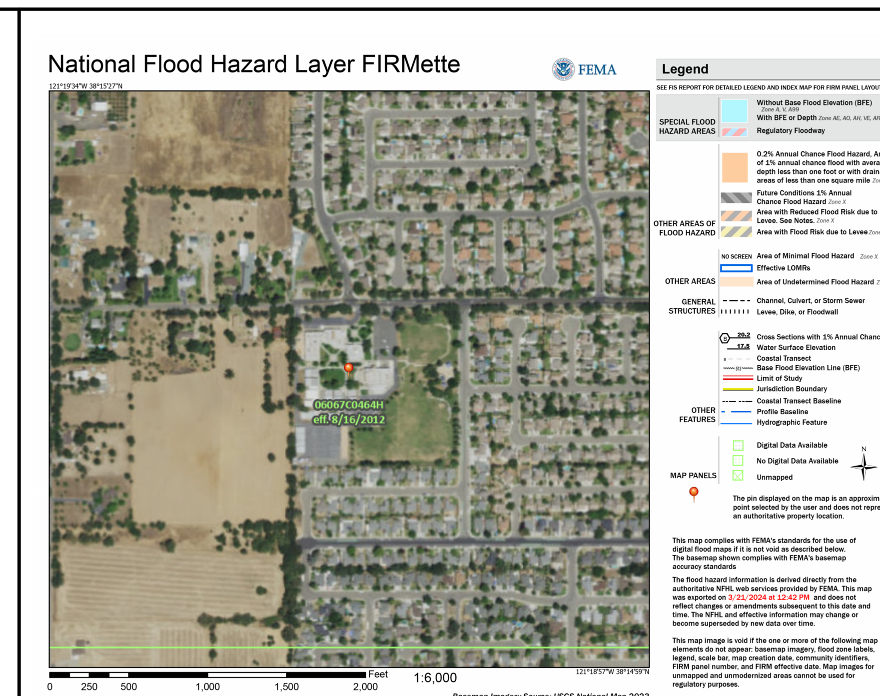

SITE SPECIFIC PROJECT INFORMATION

SITE FLOOD HAZARD
FEMA FIRM PANEL 06067C0464H
EFFECTIVE DATE 08/16/2012
ZONE: X

WIND DESIGN DATA PER CBC 1603A.1.A: 95MPH
WIND EXPOSURE: C

SEISMIC DESIGN CRITERIA
Ss = 0.582
S1 = 0.251
SDS = 0.518
SITE CLASS = D-DEFAULT
RISK CATAGORY II

PROJECT IS IN COMPLIANCE WITH CAL GREEN CODE

VICINITY MAP

PROJECT LOCATION
VERNON E. GREER ELEMENTARY SCHOOL

STATEMENT OF GENERAL CONFORMANCE

THE PC DRAWINGS SHEETS LISTED BELOW ON THE SHEET INDEX OF THIS COVER HAVE BEEN PREPARED BY OTHER DESIGN PROFESSIONALS OR CONSULTANTS WHO ARE LICENSED AND/OR AUTHORIZED TO PREPARE SUCH DRAWINGS IN THIS STATE. IT HAS BEEN EXAMINED BY ME FOR:

1) DESIGN INTENT, AND IT APPEARS TO MEET THE APPROPRIATE REQUIREMENTS OF TITLE 24, CALIFORNIA CODE OF REGULATIONS, AND THE PROJECT SPECIFICATIONS PREPARED BY ME, AND
2) COORDINATION WITH MY PLANS AND SPECIFICATIONS, AND IS ACCEPTABLE FOR INCORPORATION INTO THE CONSTRUCTION OF THIS PROJECT.

THE STATEMENT OF GENERAL CONFORMANCE "SHALL NOT BE CONSTRUED AS RELIEVING ME OF MY RIGHTS, DUTIES, AND RESPONSIBILITIES UNDER SECTIONS 17302 AND 81138 OF EDUCATION CODE, AND SECTIONS 4-336, 4-341 AND 4-334 OF TITLE 24, PART 1 (*TITLE 24, PART 1, SECTION 4-317 (B)*).

I FIND THAT: ■ ALL DRAWINGS OR SHEETS LISTED ON THE COVER OR INDEX SHEET
☐ THIS DRAWING OR PAGE
☐ IS/ARE IN GENERAL CONFORMANCE WITH THE PROJECT DESIGN, AND
■ HAS/HAVE BEEN COORDINATED WITH THE PROJECT PLANS AND SPECIFICATIONS.

SIGNATURE: [signature] DATE: 5/19/24
ARCHITECT OR ENGINEER DESIGNATED TO BE IN GENERAL RESPONSIBLE CHARGE
PRINT NAME: **MARIANA ALVAREZ-PARGA**
LICENSE NUMBER: C-36107 EXPIRATION DATE: 01-31-25

PROFESSIONAL STAMP

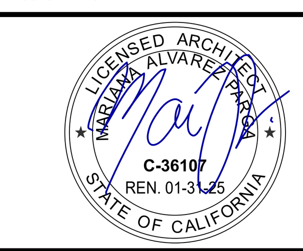

REVISIONS

NO.	DATE	DESCRIPTION

THE ARCHITECT DOES NOT REPRESENT THAT THESE PLANS OR THE SPECIFICATIONS ARE SUITABLE FOR ANY SITE OTHER THAN THE ONE FOR WHICH THEY WERE SPECIFICALLY PREPARED. THE ARCHITECT DISCLAIMS RESPONSIBILITY FOR THESE PLANS AND SPECIFICATIONS IF THEY ARE USED IN WHOLE OR IN PART AT ANY OTHER SITE. WRITTEN DIMENSIONS ON THESE DRAWINGS SHALL HAVE PRECEDENCE OVER SCALED DIMENSIONS.

PROJECT OWNER & TITLE
GALT JOINT UNION ELEMENTARY SCHOOL DISTRICT
1018 C Street, Suite 210
Galt, CA 95632

VERNON E. GREER ELEMENTARY SCHOOL RELOCATABLE BUILDINGS
248 West A Street
Galt, CA 95632

SHEET TITLE
TITLE SHEET

DRAWN BY: BI JOB NUMBER: 23544.01

SHEET NO.
G-001

DATE: MAY 15, 2024

FILE LOCATION: Autodesk Docs://23544 Greer Portable Classrooms/23544.01_Greer ES New Relocatable Blgs_A24.rvt
DATE PLOTTED: 5/9/2024 1:24:13 PM

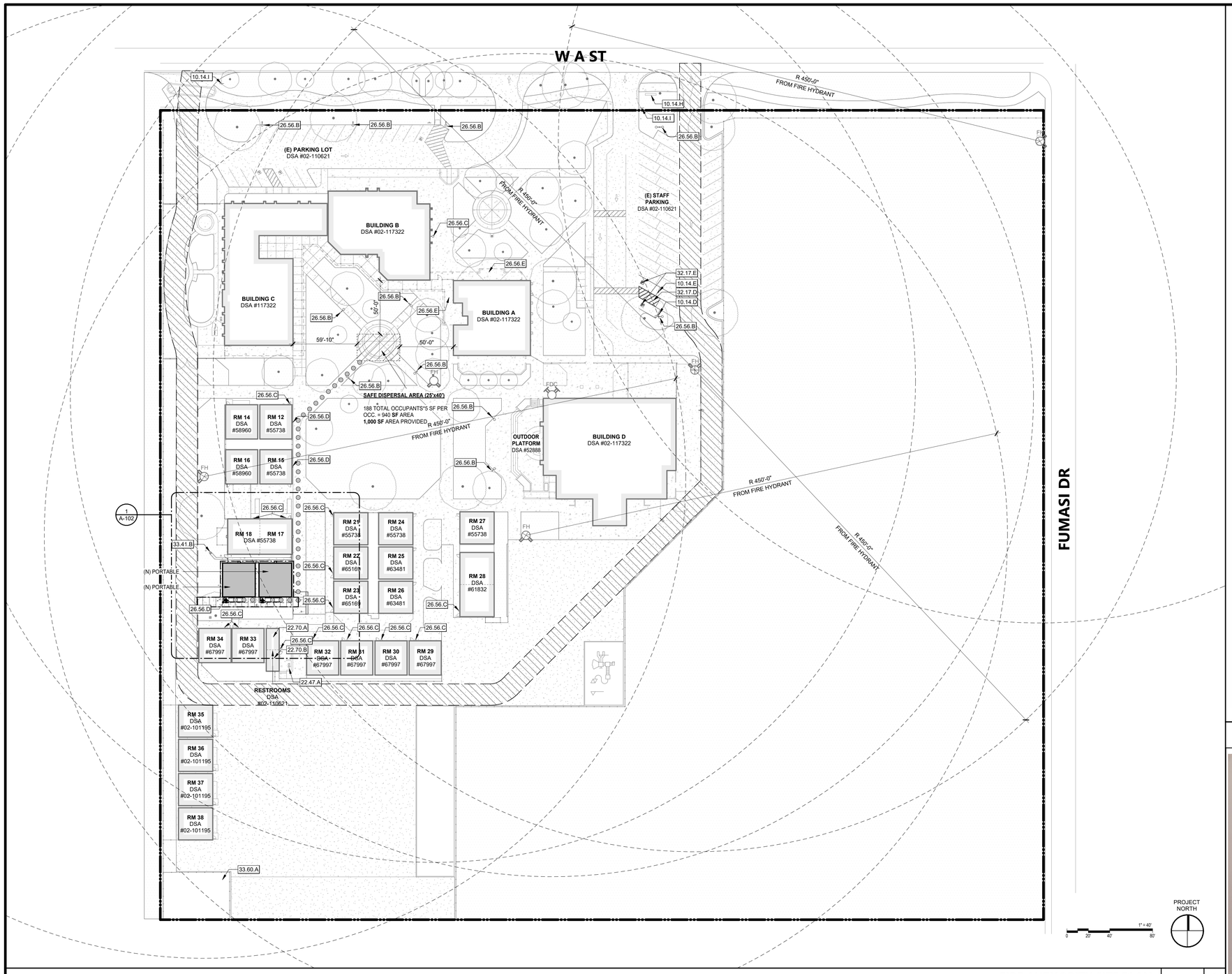

FIRE AUTHORITY SITE PLAN | 1" = 40'-0" | 1

KEYNOTES

10.14.D	(N) REGULAR ACCESSIBLE STALL SIGN. SEE B/C4.1
10.14.E	(N) VAN ACCESSIBLE STALL SIGN. SEE B/C4.1
10.14.H	(E) SCHOOL SIGN
10.14.I	(E) TOW AWAY SIGN. SEE DETAIL 9/A-111
22.47.A	(E) HI-LOW DRINKING FOUNTAIN
22.70.A	(E) GIRLS RESTROOM DSA #02-110621.
22.70.B	(E) BOYS RESTROOM DSA #02-110621.
26.56.B	(E) LIGHT STANDARD
26.56.C	(E) EXTERIOR LIGHT FIXTURE
26.56.D	(N) EXTERIOR LIGHT FIXTURE. SEE ELECTRICAL DRAWINGS
26.56.E	(E) EXTERIOR LIGHTING ALONG (E) COVERED WALKWAY
32.17.D	(N) 4" WIDE BLUE STRIPING. BLUE 15090 FEDERAL STANDARD 595A. SEE B/C4.1
32.17.E	(N) 36" X 36" INTERNATIONAL SYMBOL OF ACCESSIBILITY. SEE B/C4.1
33.41.B	(E) DROP INLET
33.60.A	(E) UTILITY ENCLOSURE

FIRE ACCESS LEGEND

- ASSUMED PROPERTY LINE
- LIMITS OF WORK
- PROJECT BUILDING
- (E) BUILDING
- (E) LANDSCAPING
- (E) FIRE ACCESS ROUTE - ALL WEATHER SURFACE (OR BETTER) MAINTAINED TO SUPPORT FIRE APPARATUS WEIGHING 60,000 LBS, HAVING A 15% MAXIMUM GRADE 20'-0" MIN WIDTH PER 2019 CFC 505.2.1
- (E) ASPHALT
- (E) FENCE LINE
- (E) ACCESSIBLE EGRESS PATH TO PUBLIC RIGHT OF WAY AND/OR SAFE DISPERSAL AREA
- FH (E) FIRE HYDRANT
- FDC (E) FIRE DEPARTMENT CONNECTION
- BUILDING ENTRANCE
- OVERHANG
- (E) TREE

BUILDING ANALYSIS

BUILDING	OCC. GROUP	CONST. TYPE	SPRINKLERS	HEIGHT	AREA (SF)	ROOF OVERHANG (SF)	TOTAL AREA (SF)	ALLOWABLE AREA 2022 CBC TABLE 506.2	ALLOWABLE HEIGHT
17	E	VB	NO	13	960	180			
18	E	VB	NO	13	960	180			
19	E	VB	NO	13	916	210			
20	E	VB	NO	13	916	210			
					3,752	780	4,435	9,500	40'

DSA 810

FIRE & LIFE SAFETY SITE CONDITIONS SUBMITTAL

Division of the State Architect (DSA) documents referenced within this publication are available on the DSA Forms or DSA Publications webpages.

To facilitate the Division of the State Architect's (DSA) fire and life safety plan review of project site conditions, DSA requires the design professional to provide the following information at time of project submittal for projects consisting of construction of a new campus, construction of new building(s), additions to existing buildings, and for site alternate design means for fire department emergency vehicle access, and fire suppression water supply.

Information associated with compliance items 1 through 3 below is to be provided for all project types indicated above. Information associated with items 4 through 7 is to be completed when an alternate means is utilized. Acknowledgement by the school district and signature from the Local Fire Authority (LFA) is only required when an alternate design means is being requested.

The Project Information and Fire & Life Safety Information sections are to be completed for all projects and imaged onto the fire access site plan. When an alternate design/means is proposed, all sections on pages 1 and 2 are to be completed and imaged on the fire access site plan.

For additional information refer to the instructions at the end of this form and DSA Policy *PL 09-01: Fire Flow for Buildings*.

PROJECT INFORMATION	
School District/Owner:	Galt Joint Union Elementary School District
Project Name/School:	Vernon E. Greer Elementary School
Project Address:	248 W A St, Galt, CA 95632

FIRE & LIFE SAFETY INFORMATION				
1.	Has a fire hydrant flow test been performed within the past 12 months? *(If yes, provide a copy of the test data.)*	Yes ☑		No ☐
2.	Was the fire hydrant water flow test performed as part of this LFA *review?*	Yes ☑		No ☐
3.	Is the project located within a designated fire hazard severity zone (FHSZ) as established by Cal-Fire? *(If yes, indicate FHSZ classification below.)*	Yes ☐		No ☑
	Refer to the following website for FHSZ locations: http://egis.fire.ca.gov/FHSZ/	Moderate ☐	High ☐	Very High ☐
	Wildland Interface Area (WIFA) *(If any designations are checked, project design must meet the requirements of CBC Chapter 7A.)*			WIFA ☐

DSA 810
FIRE & LIFE SAFETY SITE CONDITIONS SUBMITTAL

CONDITION MEANS AND METHODS RESOLUTION		ALTERNATE ACCEPTED			
		Yes	No	N/A	N/R
4.	Emergency vehicle access roadways do not meet CFC requirements.			✓	
4a.	**Acceptable Alternate:** Emergency vehicle and personnel access as proposed by the project architect is acceptable for providing fire suppression and protection of life and property.				
5.	**Fire Hydrants:** Number and spacing does not meet CFC requirements.			✓	
5a.	**Acceptable Alternate:** Number of fire hydrants and spacing as proposed by the project architect is acceptable for fire suppression and protection of life and property.				
6.	**Fire Hydrants:** Water flow and pressure are less than CFC minimum.			✓	
6a.	**Acceptable Alternate:** The available flow and pressure is acceptable for providing fire suppression and protection of life and property.				
7.	Location of fire department connection(s) serving fire sprinkler systems or standpipe systems does not meet CFC requirements.			✓	
7a.	**Acceptable Alternate:** The location of fire department connection serving the fire sprinkler system and/or standpipe system is acceptable for providing fire suppression and protection of life and property.				

School District Acceptance of Acceptable Design Alternates

By signing this form, the school district acknowledges and accepts the proposed design as an alternative to California Building Code (CBC) and California Fire Code (CFC) minimum requirements, as indicated by one or more of the conditions indicated at items 4a, 5a, 6a or 7a, for providing fire and life safety protection of life and property.

Accepted by: _____ Title: _____

Signature: _____ Date: _____

LOCAL FIRE AUTHORITY (LFA) INFORMATION	
LFA Agency Name:	
LFA Review Official:	
Title:	Work Phone:
Work Email:	

LFA Reviewer's Signature: _____ Date: _____

FIRE FLOW - 2022 CFC APPENDIX BB - TABLE 105.1

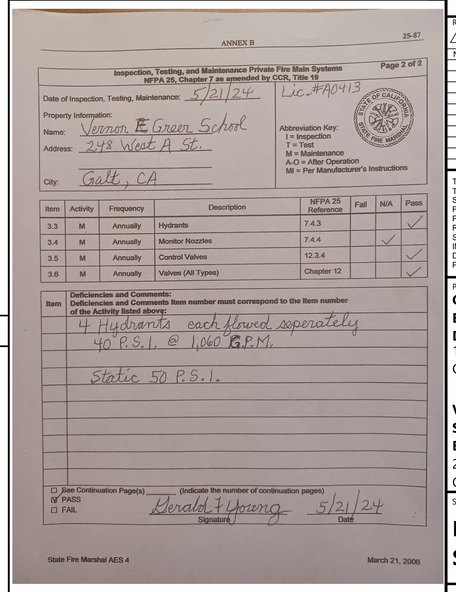

ANNEX B 25-87

Inspection, Testing, and Maintenance Private Fire Main Systems
NFPA 25, Chapter 7 as amended by CCR, Title 19
Page 2 of 2

Date of Inspection, Testing, Maintenance: 5/21/24
Lic.#A0413
Property Information:
Name: Vernon E Greer School
Address: 248 West A St.
City: Galt, CA
Abbreviation Key:
I = Inspection
T = Test
M = Maintenance
A-O = After Operation
MI = Per Manufacturer's Instructions

Item	Activity	Frequency	Description	NFPA 25 Reference	Fail	N/A	Pass
3.3	M	Annually	Hydrants	7.4.3			✓
3.4	M	Annually	Monitor Nozzles	7.4.4		✓	
3.5	M	Annually	Control Valves	12.3.4			✓
3.6	M	Annually	Valves (All Types)	Chapter 12			✓

Item — Deficiencies and Comments: Deficiencies and Comments Item number must correspond to the Item number of the Activity listed above:
4 Hydrants each flowed seperately
40 P.S.I. @ 1,060 G.P.M.
Static 50 P.S.I.

☐ See Continuation Page(s) _____ (indicate the number of continuation pages)
☑ PASS
☐ FAIL
Gerald Young 5/21/24
Signature Date

State Fire Marshal AES 4 March 21, 2006

FIRE HYDRANT LOCATIONS AND DISTRIBUTION
2022 CFC APPENDIX CC - TABLE CC105.1

FIRE FLOW REQUIREMENT (gpm)	MIN. HYDRANTS	SPACING	MAX DIST. FROM ROAD
2,000-2,250	2	450'	250'

AGENCY APPROVAL DSA# 02-122533
FILE NO. 39-24

IDENTIFICATION STAMP
DIV. OF THE STATE ARCHITECT
APP: 02-122533 INC:
REVIEWED FOR
SS ☑ FLS ☑ ACS ☑
DATE: 05/22/2024

196
1715 R STREET, SUITE 200
SACRAMENTO, CA 95811
TEL (916) 786-8178

CONSULTANTS

CIVIL ENGINEER
WARREN CONSULTING ENGINEERING, INC.
1117 Windfield Way, Suite 110
El Dorado Hills, CA 95762
TEL (916)-985-1870

PLUMBING ENGINEER
WESTON & ASSOCIATES MECHANICAL ENGINEERS, INC.
601 University Avenue, Suite 260
Sacramento, CA 95825
TEL (916)-482-0820

ELECTRICAL ENGINEER
THE ENGINEERING ENTERPRISE
1305 Marina Village Parkway
Alameda, CA 94501
TEL (530)-927-5793

BUILDING MANUFACTURER
AMERICAN MODULAR SYSTEMS
787 Spreckels Avenue
Manteca, CA 95336
TEL (209)-825-1921

PROFESSIONAL STAMP

LICENSED ARCHITECT
MARIANA ALVAREZ BEGA
C-36107
REN. 01-31-25
STATE OF CALIFORNIA

REVISIONS

NO.	DATE	DESCRIPTION

THE ARCHITECT DOES NOT REPRESENT THAT THESE PLANS OR THE SPECIFICATIONS ARE SUITABLE FOR ANY SITE OTHER THAN THE ONE FOR WHICH THEY WERE SPECIFICALLY PREPARED. THE ARCHITECT DISCLAIMS RESPONSIBILITY FOR THESE PLANS AND SPECIFICATIONS IF THEY ARE USED IN WHOLE OR IN PART AT ANY OTHER SITE. WRITTEN DIMENSIONS ON THESE DRAWINGS SHALL HAVE PRECEDENCE OVER SCALED DIMENSIONS.

PROJECT OWNER & TITLE
GALT JOINT UNION ELEMENTARY SCHOOL DISTRICT
1018 C Street, Suite 210
Galt, CA 95632

VERNON E. GREER ELEMENTARY SCHOOL RELOCATABLE BUILDINGS
248 West A Street
Galt, CA 95632

SHEET TITLE
FIRE AUTHORITY SITE PLAN

DRAWN BY: BI JOB NUMBER: 23544.01

SHEET NO.
G-002

DATE: MAY 15, 2024

FILE LOCATION: Autodesk Docs://23544 Greer Portable Classrooms/23544.01_Greer ES New Relocatable Blgs_A24.rvt
DATE PLOTTED: 5/9/2024 1:33:15 PM

SYMBOLS LEGEND TOPOGRAPHIC

BASIS OF BEARINGS:
ASSUMED

F.E.M.A. INFORMATION:
THE SUBJECT PROPERTY IS LOCATED IN "ZONE X--AREA OF MINIMAL FLOOD HAZARD PER FLOOD INSURANCE RATE MAP 06067C0464H DATED AUGUST 16, 2012.

NOTE:
EXISTING UTILITIES BASED ON VISIBLE SURFACE STRUCTURES AND RECORD INFORMATION.

- = PROPERTY LINE
- = CENTERLINE
- = EASEMENT
- = PROPERTY CORNER FOUND AS NOTED
- = PROPERTY CORNER NOTHING FOUND OR SET
- 123 = TEMPORARY BENCHMARK (SEE TBM LIST FOR INFO)
- = SWALE OR DRAINAGE FLOW
- = DRAINAGE FLOW
- = FENCE (TYPE NOTED)
- = TREE (SIZE/TYPE INDICATED)
- = SLOPE
- 100 = CONTOUR
- = CONCRETE SURFACE
- = EDGE OF ASPHALT
- = EDGE OF BUILDING
- = SIGN
- = POST OR BOLLARD
- 99.9 = GROUND ELEVATION
- 99.99 = HARD SURFACE ELEVATION

EXISTING UTILITIES

- 12"SD = STORM DRAIN LINE (SIZE & DIRECTION OF FLOW)
- 12"SD = STORM DRAIN LINE (RECORD INFORMATION)
- 12"SD = STORM DRAIN LINE (UNDERGROUND LOCATING)
- SD = STORM DRAIN MANHOLE
- = STORM DRAIN CLEANOUT
- = DROP INLET
- = AREA DRAIN
- RWL = RAIN WATER LEADER
- DS = DOWNSPOUT
- 12"SS = SANITARY SEWER LINE (SIZE & DIRECTION OF FLOW)
- 12"SS = SANITARY SEWER LINE (RECORD INFORMATION)
- 12"SS = SANITARY SEWER LINE (UNDERGROUND LOCATING)
- SS = SANITARY SEWER MANHOLE
- = SANITARY SEWER CLEANOUT
- W = WATER LINE (SIZE INDICATED)
- W = WATER LINE (RECORD INFORMATION)
- W = WATER LINE (UNDERGROUND LOCATING)
- W = WATER MANHOLE
- = WATER VALVE
- WM = WATER METER
- = WATER BOX
- = IRRIGATION CONTROL VALVE
- = FIRE HYDRANT
- = BACKFLOW PREVENTER
- = SPRINKLER
- = HOSE BIBB
- OH-E = OVERHEAD ELECTRIC LINE
- E = UNDERGROUND ELECTRIC LINE
- E = UNDERGROUND ELECTRIC LINE (RECORD INFORMATION)
- E = UNDERGROUND ELECTRIC LINE (UNDERGROUND LOCATING)
- E = ELECTRIC MANHOLE
- = UTILITY POLE (WITH GUY WIRE)
- E = ELECTRIC METER
- E = ELECTRIC BOX
- = STREET LIGHTING BOX
- OR = LIGHT STANDARD
- = SIGNAL LIGHT
- = FLOOD LIGHT
- = ELECTRICAL OUTLET
- G = GAS LINE (SIZE INDICATED)
- G = GAS LINE (RECORD INFORMATION)
- G = GAS LINE (UNDERGROUND LOCATING)
- G = GAS MANHOLE
- = GAS VALVE
- GM = GAS METER
- t = TELEPHONE LINE
- t = TELEPHONE LINE (RECORD INFORMATION)
- t = TELEPHONE LINE (UNDERGROUND LOCATING)
- = STORM DRAIN BOX
- = TRAFFIC SIGNAL BOX

TBM LIST

NUMBER	DESCRIPTION	NORTHING	EASTING	ELEVATION
5	CPS CHISELED "+"	9904.22	9900.68	42.49
13	CPS PK+WASHER	9803.43	9769.29	42.36
14	CPS CHISELED "+"	10157.85	10148.61	42.22
15	CPS CHISELED "+"	10050.07	10227.17	41.43

A.P.N. 148-0510-001

BENCHMARK NO. X584 (NAVD 88) ELEV. 42.84

FND. DISK STAMPED "X 584 1939" SET IN TOP OF CONC. POST PROJ'G 0.6' ABOVE GRND; 1.3 MI. W. FROM GALT; 0.2 MI. S. ALONG SP RR FROM STA. AT GALT; THENCE 1.1 MI. W. ALONG NEW HOPE RD.--F ST. IN R6E T5N S28, 23.5' S.E. OF C/L OF RD; 32' S.E. OF C/L INTX OF SARGENT AVE., 23' E. OF C/L OF THE AVE; 1.5' S.E. OF PP 21-124; 1.5' N. OF FNC COR. POST; 1.0' S. OF A WITNESS POST; AND ABOUT 1' HIGHER THAN RD.

ABBREVIATIONS TOPOGRAPHIC

AC	ASPHALTIC CONCRETE
ACC	ACCESSIBLE
ACU	AIR CONDITIONING UNIT
AD	AREA DRAIN
APN	ASSESSOR'S PARCEL NUMBER
APP	APPARATUS
BBALL	BASKETBALL POLE
BCM	BRASS CAP MONUMENT
BFP	BACK FLOW PREVENTER
BL	BLOCK
BLDG	BUILDING
BOL	BOLLARD
BOV	BLOW-OFF VALVE
BR.	BRICK
B.W.F.	BARBED WIRE FENCE
C	COMMUNICATION
C/L	CENTERLINE
CATV	CABLE TELEVISION
CIP	CAPPED IRON PIPE
C.L.F.	CHAIN LINK FENCE
CMP	CORRUGATED METAL PIPE
CO	CLEANOUT
COL	COLUMN
CONC.	CONCRETE
COND.	CONDENSATE
CPF	CONTROL POINT FOUND
CPS	CONTROL POINT SET
CS	CONCRETE SURFACE
D	DEPTH
DF	DRINKING FOUNTAIN
DG	DECOMPOSED GRANITE
DI	DROP INLET
DIA	DIAMETER
DRWY	DRIVEWAY
DS	DOWNSPOUT
DWG	DRAWING
E	ELECTRIC
EP	EDGE OF PAVEMENT
ESMT	EASEMENT
FA	FIRE ALARM
FDC	FIRE DEPARTMENT CONNECTION
FFE	FINISHED FLOOR ELEVATION
FH	FIRE HYDRANT
FL	FLOWLINE
FO	FIBER OPTIC
FS	FIRE SERVICE
G	GAS
GB	GRADE BREAK
GR	GRATE
GRB	GROUND ROD BOX
GROD	GROUND ROD
GV	GAS VALVE
HB	HOSE BIBB
HBD	HEADER BOARD
HP	HIGH PRESSURE
HR	HANDRAIL
HVE	HIGH VOLTAGE ELECTRIC
HWF	HOG WIRE FENCE
IC	IN CONCRETE
ICP	IRRIGATION CONTROL PANEL
ICV	IRRIGATION CONTROL VALVE
INV	PIPE INVERT ELEVATION
IRR	IRRIGATION
JP	JOINT UTILITY POLE
JT	JOINT TRENCH
LNDG	LANDING
LVE	LOW VOLTAGE ELECTRIC
M	METAL
MH	MANHOLE
MS	MOW STRIP
MSC	METAL STORAGE CONTAINER
NTS	NOT TO SCALE
OH	OVERHEAD
OHANG	OVERHANG
OIP	OPEN IRON PIPE
OSPH	OLD STEEL POST HOLE
P/L	PROPERTY LINE
PA	PLANTER AREA
PB	PARKING BUMPER
PH	POSTHOLE
PIV	POST INDICATOR VALVE
PP	POWER POLE
PRKG	PARKING
PUE	PUBLIC UTILITY EASEMENT
PV	PAVERS
PVC	POLYVINYL CHLORIDE
R	RUBBER
RG	ROLLING GATE
RIM	MANHOLE RIM ELEVATION
ROW	RIGHT OF WAY
RW	RETAINING WALL
RWD	REDWOOD
RWL	RAIN WATER LEADER
SD	STORM DRAIN
SDMH	STORM DRAIN MANHOLE
SIG	SIGNAL
SL	STREET LIGHT
SLB	STREET LIGHT BOX
SS	SANITARY SEWER
SSCO	SANITARY SEWER CLEANOUT
SSMH	SANITARY SEWER MANHOLE
STL.	STEEL
T	TELEPHONE
TBALL	TETHER BALL POLE
TBM	TEMPORARY BENCHMARK
TC	TOP OF CURB
TOW	TOP OF WALL
TP	TELEPHONE POLE
TRW	TOP OF RETAINING WALL
UG	UNDERGROUND
UNK	UNKNOWN
V	VENT
VBALL	VOLLEYBALL
W	WATER
W/	WITH
WD.	WOOD
WF	WOOD FENCE
W.I.F.	WROUGHT IRON FENCE
W.R.F.	WOOD RAIL FENCE
XF	TRANSFORMER
XWALK	CROSSWALK

SYMBOLS LEGEND

NOT ALL SYMBOLS MAY BE USED ON THESE PLANS.

PROPOSED GRADING & DRAINAGE SYMBOLS:

- 8" SD = STORM DRAIN LINE (SIZE AND FLOW SHOWN)
- = STORM DRAIN MANHOLE (SDMH)
- = CATCH BASIN (CB)
- = DROP INLET (DI)
- = AREA DRAIN (AD)
- = PLANTER DRAIN (PD) OR FLOOR DRAIN (FD)
- CO = STORM DRAIN CLEANOUT
- 99.99 = ELEVATION
- FF=100.00 = FINISHED FLOOR ELEVATION
- PAD=99.33 = BUILDING PAD ELEVATION
- = CONCRETE SIDEWALK
- = GRADED DIRECTION FOR DRAINAGE FLOW
- = SWALE
- = SLOPE
- = TREE TO BE REMOVED
- = RETAINING WALL

PROPOSED SANITARY SEWER SYMBOLS:

- 6" SS = SANITARY SEWER LINE (SIZE AND FLOW SHOWN)
- 2" FM = SANITARY FORCE MAIN (SIZE AND FLOW SHOWN)
- = SANITARY SEWER MANHOLE (SSMH)
- CO = SEWER CLEANOUT FLUSHER BRANCH

PROPOSED WATER SYMBOLS:

- 8" W = WATER LINE & SIZE
- 8" FS = FIRE LINE & SIZE
- 8" DW = DOMESTIC WATER LINE & SIZE
- 8" RW = RECLAIMED WATER LINE & SIZE
- 8" IRR = IRRIGATION SERVICE LINE & SIZE
- 8" NP = NON POTABLE WATER LINE & SIZE
- 8" SP = FIRE SPRINKLER SERVICE LINE & SIZE
- = GATE VALVE
- M = WATER METER
- FH = FIRE HYDRANT ASSEMBLY
- FDC = FIRE DEPARTMENT CONNECTION
- DC = DETECTOR CHECK VALVE
- DDC = DOUBLE DETECTOR CHECK VALVE
- RP = REDUCED PRESSURE BACKFLOW PREVENTER
- = BUTTERFLY VALVE
- 1" = AIR RELEASE VALVE + SIZE
- 1" = BLOW-OFF VALVE + SIZE
- PIV = POST INDICATOR VALVE

ABBREVIATIONS

NOT ALL SYMBOLS MAY BE USED ON THESE PLANS.

AB	AGGREGATE BASE
AC	ASPHALTIC CONCRETE
AD	AREA DRAIN
APN	ASSESSOR'S PARCEL NUMBER
ARV	AIR RELEASE VALVE
ASB	AGGREGATE SUB-BASE
BO	BLOW-OFF VALVE
BV	BUTTERFLY VALVE
BW	BACK OF WALK
C/L	CENTERLINE
CB	CATCH BASIN
CL	CLASS
CMP	CORRUGATED METAL PIPE
CATV	CABLE TELEVISION
CO	CLEANOUT
COMM	COMMUNICATION
CONC.	CONCRETE
CONST.	CONSTRUCT
CR	CURB RETURN
CS	CONCRETE SURFACE
DC	DOUBLE CHECK VALVE
DDC	DOUBLE DETECTOR CHECK VALVE
DG	DECOMPOSED GRANITE
DI	DROP INLET
DIA	DIAMETER
DIP	DUCTILE IRON PIPE
DWG	DRAWING
DS	DOWNSPOUT
E	ELECTRIC
EP	EDGE OF PAVEMENT
ESMT	EASEMENT
EX	EXISTING
FS	FIRE SERVICE LINE
FDC	FIRE DEPARTMENT CONNECTION
FL	FLOWLINE
FM	SANITARY SEWER FORCE MAIN
FF	FINISHED FLOOR ELEVATION
FH	FIRE HYDRANT
G	GAS
GR	GRATE ELEVATION
GRD	GRADE ELEVATION
GV	GATE VALVE
HB	HOSE BIBB
HBD	HEADER BOARD
HDPE	HIGH DENSITY POLYETHYLENE PIPE
HP	HIGH POINT
INV	PIPE INVERT ELEVATION
JP	JOINT UTILITY POLE
LF	LINEAL FEET
LIP	LIP OF GUTTER
LT	LEFT
MS	MOWSTRIP
NTS	NOT TO SCALE
OH	OVERHEAD
PCC	PORTLAND CEMENT CONCRETE
PD	PLANTER DRAIN
PIV	POST INDICATOR VALVE
P/L	PROPERTY LINE
PP	POWER POLE
PUE	PUBLIC UTILITY EASEMENT
PVC	POLYVINYL CHLORIDE
RCP	REINFORCED CONCRETE PIPE
R	RADIUS
RIM	MANHOLE RIM ELEVATION
RP	REDUCED PRESSURE BACKFLOW PREVENTER
RW	RIGHT OF WAY
SCH	SCHEDULE
SD	STORM DRAIN
SDMH	STORM DRAIN MANHOLE
SG	SUBGRADE ELEVATION
SI	SIDE INLET
SS	SANITARY SEWER
SSMH	SANITARY SEWER MANHOLE
STD	STANDARD
S/W	SIDEWALK
T	TELEPHONE
TC	TOP OF CURB
TD	TRENCH DRAIN
TDCB	TRENCH DRAIN CATCH BASIN
TP	TELEPHONE POLE
TR	TOP OF RAMP
TRW	TOP OF RETAINING WALL
TSW	TOP OF SEAT WALK
TW	TOP OF WALK ELEVATION
U	UTILITY
UG	UNDERGROUND
UON	UNLESS OTHERWISE NOTED
VCP	VITRIFIED CLAY PIPE
W	WATER
W/	WITH
W/O	WITHOUT
WV	WATER VALVE

GENERAL NOTES

811 Know what's below. Call before you dig.

1. THE TYPES, LOCATIONS, SIZES, AND/OR DEPTHS OF EXISTING UNDERGROUND UTILITIES AS SHOWN ON THESE PLANS WERE OBTAINED FROM SOURCES OF VARYING RELIABILITY. THE CONTRACTOR IS CAUTIONED THAT ONLY ACTUAL EXCAVATION WILL REVEAL THE TYPES, EXTENT, SIZES, LOCATIONS AND DEPTHS OF SUCH UNDERGROUND UTILITIES. A REASONABLE EFFORT HAS BEEN MADE TO LOCATE AND DELINEATE ALL KNOWN UNDERGROUND UTILITIES. HOWEVER, WARREN CONSULTING ENGINEERS CAN ASSUME NO RESPONSIBILITY FOR THE COMPLETENESS OR ACCURACY OF ITS DELINEATION OF SUCH UNDERGROUND UTILITIES, NOR FOR THE EXISTENCE OF OTHER BURIED OBJECTS OR UTILITIES WHICH MAY BE ENCOUNTERED BUT WHICH ARE NOT SHOWN ON THESE PLANS. THE CONTRACTOR OR ANY SUBCONTRACTOR FOR THIS CONTRACT SHALL NOTIFY MEMBERS OF UNDERGROUND SERVICE ALERT (USA) TWO (2) WORKING DAYS IN ADVANCE OF PERFORMING ANY EXCAVATION WORK BY CALLING TOLL FREE 1-800-227-2600, OR 811.
2. WARREN CONSULTING ENGINEERS, INC. (WCE) ASSUMES NO RESPONSIBILITY FOR ERRORS IN PHYSICAL LOCATION OF IMPROVEMENTS, HORIZONTAL OR VERTICAL, IF STAKED BY OTHERS. IN ADDITION, ANY SUCH ERRORS IN PHYSICAL LOCATION MAY AFFECT THE INTENDED DESIGN OF SUCH IMPROVEMENTS AND WCE CANNOT BE HELD RESPONSIBLE FOR SUCH CONDITIONS WHICH ARE A RESULT OF ERRORS IN SURVEYING, OR IMPROPER CONSTRUCTION.
3. IF SUBSURFACE CULTURAL RESOURCES, REMAINS, AND/OR ARTIFACTS ARE UNCOVERED DURING PROJECT CONSTRUCTION, ALL WORK IN THE VICINITY SHALL BE STOPPED UNTIL SUCH ITEMS CAN BE ASSESSED BY AN APPROPRIATE MEMBER OF THE COUNTY ENVIRONMENTAL IMPACT SECTION STAFF.
4. CONTRACTOR AGREES THAT HE/SHE SHALL ASSUME SOLE AND COMPLETE RESPONSIBILITY FOR JOB SITE CONDITIONS DURING THE COURSE OF CONSTRUCTION OF THIS PROJECT, INCLUDING SAFETY OF ALL PERSONS AND PROPERTY: THAT THIS REQUIREMENT SHALL APPLY CONTINUOUSLY AND SHALL NOT BE LIMITED TO NORMAL WORKING HOURS: AND THAT THE CONTRACTOR SHALL DEFEND, INDEMNIFY AND HOLD THE OWNER AND ENGINEER HARMLESS FROM ANY AND ALL LIABILITY, REAL OR ALLEGED, IN CONNECTION WITH THE PERFORMANCE OF WORK ON THIS PROJECT, EXCEPTING FOR LIABILITY ARISING FROM THE SOLE NEGLIGENCE OF THE OWNER OR ENGINEER.
5. THE CONTRACTOR SHALL OBTAIN AN EXCAVATION PERMIT FROM THE STATE OF CALIFORNIA DEPARTMENT OF INDUSTRIAL SAFETY FOR ALL EXCAVATIONS OF 5 FEET OR MORE IN DEPTH.
6. IT SHALL BE THE CONTRACTOR'S RESPONSIBILITY TO MAKE ALL NECESSARY PRE-BID AND PRE-CONSTRUCTION SITE INSPECTION, AND/OR OBSERVATIONS ON THE SITE TO PRE-DETERMINE ALL HIS/HER MEANS AND METHODS NECESSARY TO COMPLETE THE IMPROVEMENTS SHOWN ON THESE PLANS AND PER THE PROJECT SPECIFICATIONS. IT IS THE CONTRACTORS RESPONSIBILITY TO DETERMINE, AND INCLUDE IN HIS/HER CONTRACT, ALL MEANS AND METHODS NECESSARY TO PERFORM A COMPLETE AND ACCEPTABLE JOB.
7. WHERE IMPROVEMENTS LIE WITHIN AN EXISTING DEVELOPED AREA, CONTRACTOR SHALL USE CAUTION WHEN ACCESSING THE SITE THROUGH THESE EXISTING IMPROVEMENTS. IT IS THE CONTRACTORS RESPONSIBILITY TO PROTECT ANY SUCH EXISTING IMPROVEMENTS OUTSIDE THE PROJECT BOUNDARY, OR EXISTING IMPROVEMENTS WITHIN THE BOUNDARY WHICH ARE TO REMAIN. PROPER PRECAUTIONS SHALL BE PROVIDED AND MAINTAINED THROUGHOUT CONSTRUCTION. ANY DAMAGE SHALL BE REPAIRED OR REPLACED TO THE SATISFACTION OF THE OWNER.
8. IT IS THE RESPONSIBILITY OF THE CONTRACTOR TO KEEP DETAILED RECORDS OF MINOR CHANGES OR ADJUSTMENTS MADE DURING CONSTRUCTION (WHICH WERE NOT FORMALLY ISSUED). UPON PROJECT COMPLETION, THESE RECORDS AND/OR INFORMATION SHALL BE PROVIDED TO THE OWNER AND WARREN CONSULTING ENGINEERS, INC. UNLESS AN OFFICIAL "AS-BUILT" SET OF PLANS IS A REQUIREMENT OF THE CONTRACT. IF AS-BUILT PLANS ARE A REQUIREMENT OF THE CONTRACT, REFER TO SPECIFICATIONS FOR AS-BUILT DELIVERABLE REQUIREMENTS.
9. IN VEHICULAR PATHWAYS, EXISTING ASPHALTIC AND/OR CONCRETE SURFACES SHALL BE CUT TO A NEAT AND STRAIGHT LINE, PARALLEL OR PERPENDICULAR TO THE VEHICULAR TRAVELED PATH. THIS IS TYPICALLY THE ROADWAY CENTERLINE, BUT MAY VARY. THAT SAWCUT EDGE SHALL BE PROTECTED FROM DAMAGE DURING CONSTRUCTION SO A CLEAN EDGE REMAINS FOR PATCH BACK.. IF EDGE IS DAMAGED, A NEW SAW CUT WILL BE REQUIRED. THE EXPOSED EDGE SHALL BE "TACKED" WTH EMULSION PRIOR TO PAVING.
10. NO BURNING OR BLASTING SHALL BE ALLOWED ONSITE UNLESS SPECIFICALLY ADDRESSED ON PLANS, OR SPECIFICALLY APPROVED AND COORDINATED WITH THE ARCHITECT, ENGINEER, AND LOCAL AGENCY OR OTHER ADMINISTRATIVE AUTHORITY.
11. SUBGRADE AND RESULTING FINISHED GRADE SHALL BE CONSTRUCTED SMOOTH AND UNIFORM BETWEEN SPOT ELEVATIONS, CONTOURS OR OTHER STRUCTURE ELEVATIONS SHOWN ON GRADING OR OTHER PLANS. NO MOUNDS, RUTS, DEPRESSIONS OR OTHER GRADING DEFICIENCIES WILL BE ALLOWED UNLESS SPECIFICALLY SHOWN ON PLANS.
12. ON NEW WATER SYSTEMS, SERVICE LATERALS SHALL BE MADE USING APPROPRIATE "TEE" AND "WYE" FITTINGS. SADDLE TAPS WILL ONLY BE ALLOWED WHEN MAKING CONNECTIONS TO EXISTING WATER MAINS.
13. CURING COMPOUND SHALL BE APPLIED IN A CONTINUOUS SOLID WET FLOWING COAT. ANY "SPOTTY" APPLICATIONS SHALL BE RECOATED IMMEDIATELY. APPLICATION SHALL BE INSPECTED BY PROJECT INSPECTOR DURING APPLICATION.
14. EMBEDMENT OF FEATURES IN CONCRETE PAVING, CURBS, OR WALLS, SUCH AS SQUARE OR ROUND TUBING, POSTS, OR COLUMNS, STEEL BOLTED PLATES, OR OTHER STRUCTURES, SHALL REQUIRE ADDITIONAL SCORE OR EXPANSION JOINTS TO PREVENT UNCONTROLLED CRACKING. THOSE ADDITIONAL JOINTS MAY OR MAY NOT BE SPECIFICALLY SHOWN ON PLANS BUT SHALL BE PROVIDED BY THE CONTRACTOR.
15. EMBEDMENT OF FEATURES IN CONCRETE PAVING, CURBS, OR WALLS, SUCH AS SQUARE OR ROUND TUBING, POSTS, OR COLUMNS, STEEL BOLTED PLATES, OR OTHER STRUCTURES, SHALL REQUIRE A MINOR ADJUSTMENT OF REBAR WITHIN CONCRETE TO ALLOW FOR SUCH STRUCTURE. THAT REBAR ADJUSTMENT MAY NOT BE SPECIFICALLY SHOWN ON PLANS.
16. NO MORE THAN 1 GALLON OF WATER PER YARD OF CONCRETE CAN BE ADDED TO THE TRUCK AFTER ARRIVAL TO PROJECT SITE. THE ADDITION OF WATER CAN ONLY BE ADDED UNDER THE SUPERVISION OF THE CONCRETE INSPECTOR OR LABORATORY TECHNICIAN.
17. WHEN PUMPING CONCRETE FOR PLACEMENT, ABSOLUTELY NO WATER IS TO BE ADDED TO PUMP HOPPER. ANY WATER ADDED TO HOPPER WILL BE REASON FOR CONCRETE REJECTION AT THE CONTRACTORS EXPENSE.
18. ALL CONTRACTION/CONSTRUCTION JOINTS "CJ" SHALL BE 1/4 THE SLAB THICKNESS DEEP, BUT NO LESS THAN 1" FOR CONTROLLING OF CRACKING. CONTRACTOR SHALL EXERCISE CAUTION WHEN FINAL TROWELING OF CONCRETE SO AS NOT TO FILL IN THESE JOINTS WTH CONCRETE CREAM. ANY CRACKS OUTSIDE OF JOINTS WHICH WERE CONSTRUCTED LESS THAN 1" DEEP, SHALL BE CAUSE FOR CONCRETE SLAB(S) TO BE REMOVED AND REPLACE AT CONTRACTORS EXPENSE.
19. ANY SCREED BOARDS SET WITHIN CONCRETE SLABS SHALL BE AN "OVERHEAD SCREED" SO THERE IS NO INTERFERENCE WITH THE PLACEMENT AND ALIGNMENT OF SLAB REINFORCING.
20. 3-1/2" FELT JOINTS WILL NOT BE ACCEPTED. PROVIDE A FULL 4" FELT JOINT FOR 4" SLAB CONSTRUCTION, AND A 6" FELT JOINT FOR A 6" SLAB SLAB CONSTRUCTION.
21. SHOULD ANY SHRINKAGE CRACKS OCCUR OUTSIDE OF EITHER THE EXPANSION JOINTS OR CRACK CONTROL JOINTS, THEN THE CONCRETE SLAB SHALL BE SAWCUT AT THE NEAREST JOINTS ON EACH SIDE OF THE CRACK AND THE CONCRETE SECTION SHALL BE, REMOVED AND REPLACED. NEW CONCRETE SHALL BE DOWELED INTO EXISTING CONCRETE PER DRAWING DETAIL.
22. ALL AREAS DISTURBED BY GRADING OPERATIONS WHETHER SHOWN ON THE DRAWINGS OR NOT SHALL BE HYDRO SEEDED UNLESS OTHERWISE NOTED. HYDRO SEEDING SHALL CONFORM TO LOCAL CITY/COUNTY STANDARDS.
23. REPAIR OR PATCHING OF GALVANIZED METALS, SUCH AS AFTER WELDING GALVANIZED COMPONENTS, SHALL BE MADE USING A ZINC COMPOSITION "HOT STICK" APPLICATION PER ASTM A 780-01. GALVANIZING PAINTS WILL NOT BE ALLOWED.

GENERAL PAVING SURFACE NOTES:

1. PROVIDE EQUIVALENT OF MEDIUM BROOM FINISH AT SLOPES UP TO 5.99%, TYPICAL. PROVIDE EQUIVALENT OF HEAVY BROOM FINISH AT SLOPES 6% AND GREATER. REFER TO SPECIFICATIONS.
2. ALL NEW PEDESTRIAN WALKWAYS (NON-RAMP) SHALL BE SLOPED NO GREATER THAN 2.0%, AND NO LESS THAN 0.75% IN ANY DIRECTION, UNLESS SPECIFICALLY LABELED OTHERWISE. ALL CONCRETE SHALL MEET THE FOLLOWING SLOPE REQUIREMENTS:
   - NO GREATER THAN 5% SLOPE IN THE DIRECTION OF TRAVEL.
   - NO GREATER THAN 2% SLOPE CROSSING THE DIRECTION OF TRAVEL.
   - NO GREATER THAN 2% SLOPE IN ANY DIRECTION IN COURTYARD OR PLAZA AREAS.

SHEET INDEX

NO.	SHEET DESCRIPTION
CIVIL	
C0.1	CIVIL GENERAL NOTES AND ABBREVIATIONS
C0.2	TOPOGRAPHIC SURVEY
C1.1	DEMOLITION PLAN
C1.2	ENGINEERED FILL PLAN
C2.1	GRADING PLAN
C3.1	UTILITY PLAN
C4.1	PAVING AND STRIPING PLAN
C5.1	DETAILS AND SECTIONS

AGENCY APPROVAL DSA# 02-122533

IDENTIFICATION STAMP
DIV. OF THE STATE ARCHITECT
APP: 02-122533 INC:
REVIEWED FOR
SS ☑ FLS ☑ ACS ☑
DATE: 05/22/2024

196

1715 R STREET, SUITE 200
SACRMENTO, CA 95811
TEL (916) 786-8178

CONSULTANTS

CIVIL ENGINEER
WARREN CONSULTING ENGINEERING, INC.
1117 Windfield Way, Suite 110
El Dorado Hills, CA 95762
TEL (916)-985-1870

MECHANICAL ENGINEER
WESTON & ASSOCIATES MECHANICAL ENGINEERS, INC.
601 University Avenue, Suite 260
Sacramento, CA 95825
TEL (916)-482-0820

ELECTRICAL ENGINEER
THE ENGINEERING ENTERPRISE
1305 Marina Village Parkway
Alameda, CA 94501
TEL (530)-927-5793

BUILDING MANUFACTURER
AMERICAN MODULAR SYSTEMS
787 Spreckels Avenue
Manteca, CA 95336
TEL (209)-825-1921

WCE
WARREN CONSULTING ENGINEERS, INC.
1117 WINDFIELD WAY, SUITE 110
EL DORADO HILLS, CA 95762 | (916) 985-1870

PROFESSIONAL STAMP

REGISTERED PROFESSIONAL ENGINEER
ANTHONY J. TASSANO
NO. C74698
OF CALIFORNIA

#	NO.	DATE	DESCRIPTION

THE ARCHITECT DOES NOT REPRESENT THAT THESE PLANS OR THE SPECIFICATIONS ARE SUITABLE FOR ANY SITE OTHER THAN THE ONE FOR WHICH THEY WERE SPECIFICALLY PREPARED. THE ARCHITECT DISCLAIMS RESPONSIBILITY FOR THESE PLANS AND SPECIFICATIONS IF THEY ARE USED IN WHOLE OR IN PART AT ANY OTHER SITE. WRITTEN DIMENSIONS ON THESE DRAWINGS SHALL HAVE PRECEDENCE OVER SCALED DIMENSIONS.

GALT JOINT UNIION ELEMENTARY SCHOOL DISTRICT

1018 C Street, Suite 210
Galt, CA 95632

VERNON E. GREER ELEMENTARY SCHOOL RELOCATABLE BLGS

248 West A Street
Galt, CA 95632

SHEET TITLE

CIVIL GENERAL NOTES AND ABBREVIATIONS

DRAWN BY: AT JOB NUMBER: 23544.01

SHEET NO.

C0.1

DATE: MARCH 11, 2024

CONSTRUCTION DOCUMENTS

FILENAME: I:\24-010\CIVIL\DWG\24-010-C01.DWG

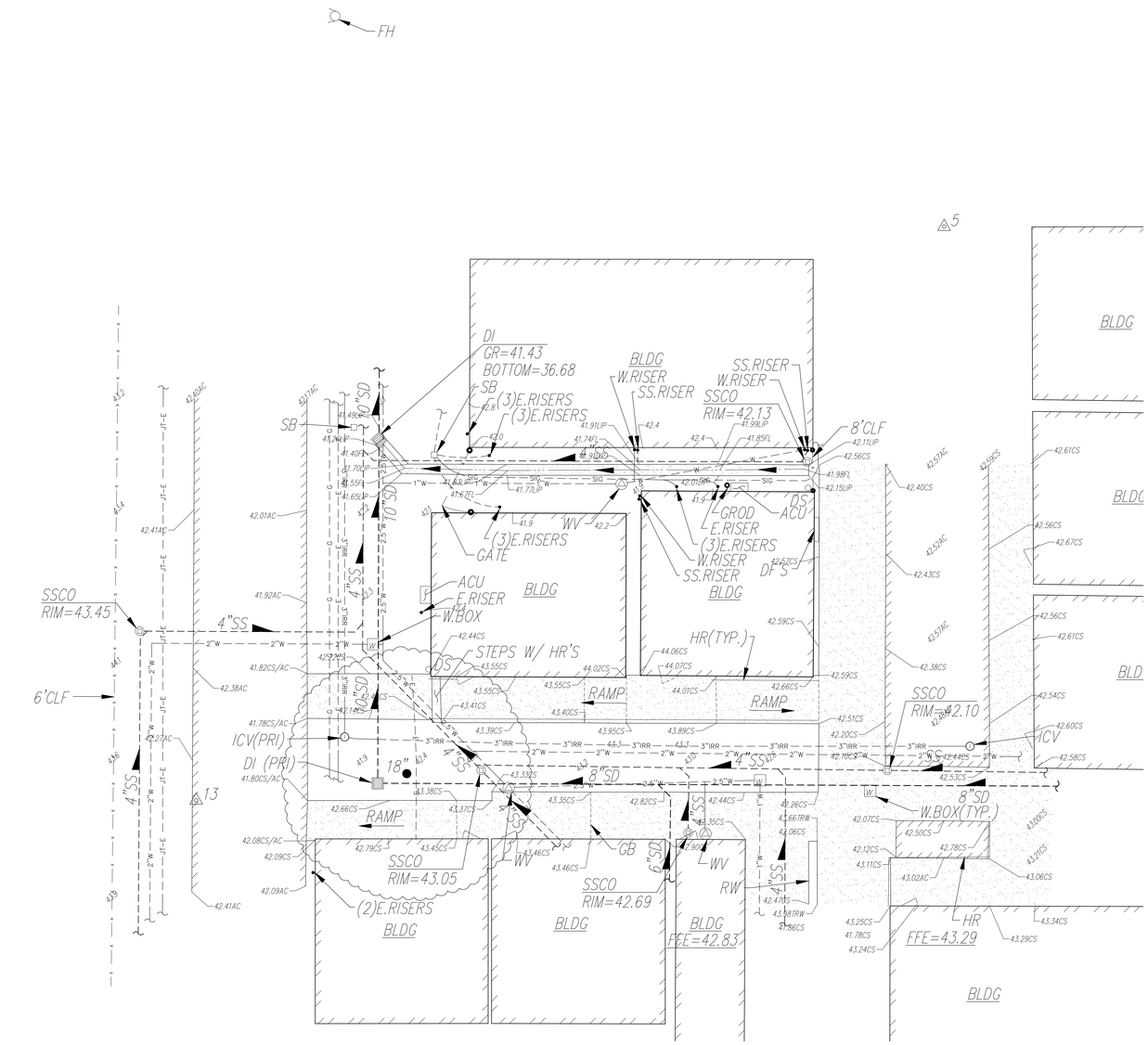

VIEW "A"

SCALE 1"=10'

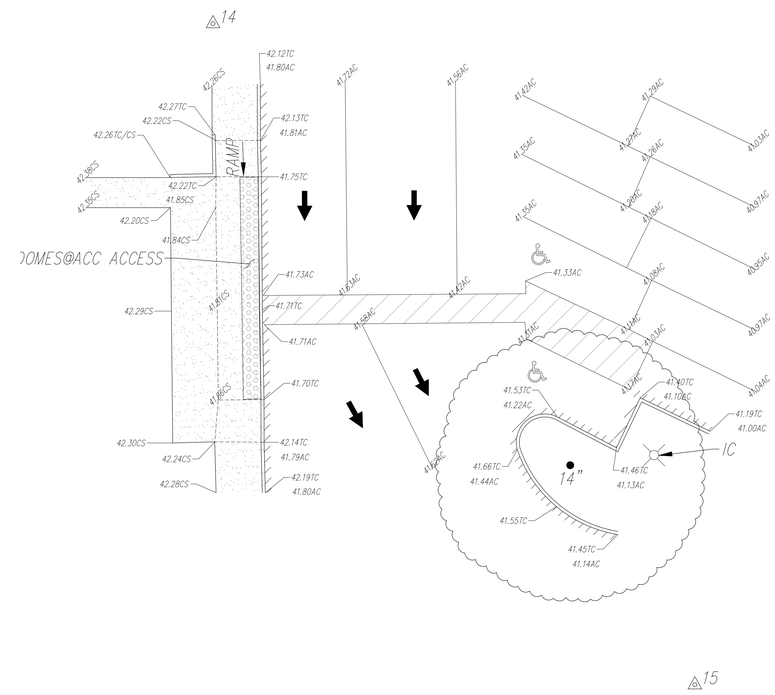

VIEW "B"

SCALE 1"=10'

GRAPHIC SCALE

10' 0 5' 10' 20'

(IN FEET) 1 inch = 10 feet

NORTH

THIS DRAWING MAY HAVE BEEN ENLARGED OR REDUCED.

AGENCY APPROVAL DSA# 02-122533

IDENTIFICATION STAMP
DIV. OF THE STATE ARCHITECT
APP: 02-122533 INC:
REVIEWED FOR
SS ☑ FLS ☑ ACS ☑
DATE: 05/22/2024

196

1715 R STREET, SUITE 200
SACRMENTO, CA 95811
TEL (916) 786-8178

CONSULTANTS

CIVIL ENGINEER
WARREN CONSULTING ENGINEERING, INC.
1117 Windfield Way, Suite 110
El Dorado Hills, CA 95762
TEL (916)-985-1870

MECHANICAL ENGINEER
WESTON & ASSOCIATES MECHANICAL ENGINEERS, INC.
601 University Avenue, Suite 260
Sacramento, CA 95825
TEL (916)-482-0820

ELECTRICAL ENGINEER
THE ENGINEERING ENTERPRISE
1305 Marina Village Parkway
Alameda, CA 94501
TEL (530)-927-5793

BUILDING MANUFACTURER
AMERICAN MODULAR SYSTEMS
787 Spreckels Avenue
Manteca, CA 95336
TEL (209)-825-1921

WARREN CONSULTING ENGINEERS, INC.
1117 WINDFIELD WAY, SUITE 110
EL DORADO HILLS, CA 95762 | (916) 985-1870

PROFESSIONAL STAMP

REGISTERED PROFESSIONAL ENGINEER
ANTHONY J. TAISSANO
C-14690
OF CALIFORNIA

#	NO.	DATE	DESCRIPTION

THE ARCHITECT DOES NOT REPRESENT THAT THESE PLANS OR THE SPECIFICATIONS ARE SUITABLE FOR ANY SITE OTHER THAN THE ONE FOR WHICH THEY WERE SPECIFICALLY PREPARED. THE ARCHITECT DISCLAIMS RESPONSIBILITY FOR THESE PLANS AND SPECIFICATIONS IF THEY ARE USED IN WHOLE OR IN PART AT ANY OTHER SITE. WRITTEN DIMENSIONS ON THESE DRAWINGS SHALL HAVE PRECEDENCE OVER SCALED DIMENSIONS.

GALT JOINT UNIION ELEMENTARY SCHOOL DISTRICT

1018 C Street, Suite 210
Galt, CA 95632

VERNON E. GREER ELEMENTARY SCHOOL RELOCATABLE BLGS

248 West A Street
Galt, CA 95632

SHEET TITLE

TOPOGRAPHIC SURVEY

DRAWN BY: AT JOB NUMBER: 23544.01

SHEET NO.

C0.2

DATE: MARCH 11, 2024

CONSTRUCTION DOCUMENTS

FILENAME: I:\24-010\CIVIL\DWG\24-010-C02.DWG

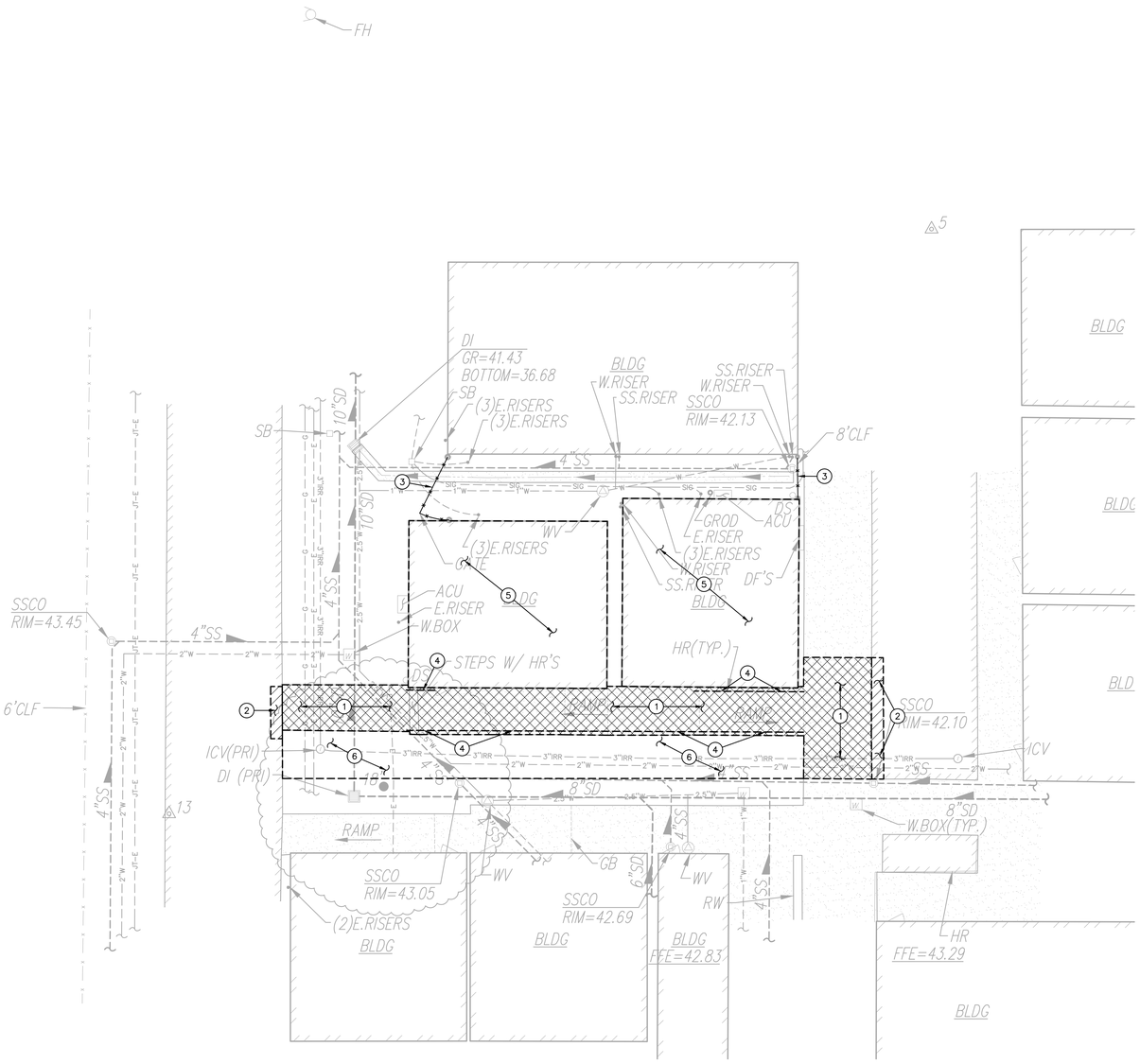

VIEW "A"

SCALE 1"=10'

DEMOLITION NOTES

1. REMOVE AND DISPOSE OF EXISTING CONCRETE PAVING AND AGGREGATE BASE. WHERE SAWCUTS ARE NECESSARY, THEY SHALL BE A NEAT STRAIGHT LINE. CUT SHALL BE MADE AT NEAREST EXISTING JOINT TO LOCATION SHOWN.
2. REMOVE AND DISPOSE OF EXISTING ASPHALT PAVING AND AGGREGATE BASE. WHERE SAWCUT EDGES ARE SHOWN, THEY SHALL BE A NEAT STRAIGHT LINE. MAINTAIN CLEAN STRAIGHT CUT EDGE UNTIL NEW PAVING PLACED.
3. REMOVE AND DISPOSE OF EXISTING CHAIN LINK FENCE, GATES, POSTS AND ASSOCIATED FOOTINGS TO LIMITS SHOWN.
4. REMOVE AND DISPOSE OF EXISTING HANDRAIL.
5. REMOVE AND DISPOSE OF EXISTING PORTABLE BUILDING AND ASSOCIATED WOOD FOUNDATIONS. REMOVE SERVICE PIPE OUTSIDE LIMITS OF NEW WORK AND CAP IN PLACE.
6. REMOVE AND DISPOSE OF EXISTING BARK MATERIAL TO LIMITS SHOWN.

DEMOLITION GENERAL NOTES

1. REFER TO ARCHITECTURAL, LANDSCAPE, ELECTRICAL AND PLUMBING PLANS FOR ADDITIONAL DEMOLITION ITEMS.
2. IN THE EVENT THAT ANY UNUSUAL CONDITIONS NOT COVERED BY THE GEOTECHNICAL INVESTIGATION REPORT OR ARE ENCOUNTERED DURING GRADING OPERATIONS THE GEOTECHNICAL ENGINEER AND THE ARCHITECT SHALL BE IMMEDIATELY NOTIFIED FOR DIRECTIONS.
3. ADDITIONAL DEMOLITION INFORMATION MAY BE SHOWN ON THE GRADING, DRAINAGE, AND UTILITY PLANS, AND THOSE PLANS PREPARED BY OTHER DISCIPLINES FOR THIS PROJECT.
4. ALL DEMOLISHED ITEMS SHALL BE DISPOSED OF OFFSITE AT A SUITABLE, LEGAL, DUMP SITE OR OTHER FACILITY.
5. ALL DISPOSED OF MATERIALS SHALL BE RECYCLED IF POSSIBLE.
6. THE SCHOOL DISTRICT SHALL HAVE SALVAGE RIGHTS TO ANY DEMOLISHED ITEMS SHOWN HEREON. THE CONTRACTOR SHALL GIVE THE DISTRICT NOTICE 7 DAYS PRIOR TO THE START OF DEMOLITION. THE DISTRICT SHALL MOVE ANY RETAINED ITEMS OUT OF THE CONTRACTORS WORK AREA, UNLESS ANOTHER ARRANGEMENT IS MADE WITH THE CONTRACTOR. ANY REMAINING ITEMS BECOME THE PROPERTY OF THE CONTRACTOR AND SHALL BE REMOVED FROM THE SITE. ANY ITEMS NOT SHOWN FOR REMOVAL SHALL REMAIN AND SHALL BE PROTECTED FROM DAMAGE DURING CONSTRUCTION TO A REASONABLE EXTENT.
7. EXISTING UTILITY STRUCTURES IN AREAS OF NEW PAVING SHALL BE REMOVED AND REPLACED WITH NEW BOX/COVER AT NEW GRADE UNLESS SPECIFICALLY NOTED OTHERWISE.
8. ITEMS OUTSIDE THE LIMITS OF DEMOLITION SHALL REMAIN AND BE PROTECTED FROM DAMAGE DURING CONSTRUCTION.
9. EXISTING UTILITY STRUCTURES AND PIPING NOT SHOWN ON DEMOLITION PLAN TO BE REMOVED SHALL REMAIN AND BE PROTECTED.
10. SAWCUTS AND SUBSEQUENT PATCH BACK OF CONCRETE WALKS, SHALL BE TO THE EXISTING CONCRETE JOINT BEYOND THE NEAREST LOCATION OF DEMOLITION AS SHOWN. A REASONABLE EFFORT HAS BEEN MADE TO LOCATE, SHOW AND COORDINATE WITH EXISTING JOINTS, HOWEVER IF FIELD CONDITIONS ARE OTHERWISE, IT IS UNDERSTOOD TO REMOVE AND PATCH BACK TO THE NEAREST JOINTS BEYOND DEMOLITION.
11. PRIOR TO THE START OF CONSTRUCTION, VERIFY AND POTHOLE ALL UTILITY POINTS OF CONNECTION FOR LOCATION, DEPTH, AND SIZE. IF CONFLICT IS FOUND, CONTACT THE ENGINEER IMMEDIATELY FOR DIRECTION.
12. WITHIN LANDSCAPE AREAS TO BE DEMOLISHED THERE MAY BE EXISTING IRRIGATION LINES NOT SHOWN ON THIS PLAN. CONTRACTOR SHALL REMOVE LATERAL LINES AND HEADS ENCOUNTERED. MAIN LINES AND CONTROL WIRES MAY ONLY BE REMOVED PROVIDED THAT ROUTING IS KNOWN AND REMOVAL WILL NOT DEACTIVATE AN IRRIGATION SYSTEMS INTENDED TO REMAIN. IF CONFLICT IS FOUND, CONTACT THE ENGINEER FOR DIRECTION.
13. COORDINATE REMOVAL OF LANDSCAPE ITEMS WITH LANDSCAPE PLANS.

GRAPHIC SCALE

10' 0 5' 10' 20'

(IN FEET) 1 inch = 10 feet

NORTH

THIS DRAWING MAY HAVE BEEN ENLARGED OR REDUCED.

AGENCY APPROVAL DSA# 02-122533

IDENTIFICATION STAMP
DIV. OF THE STATE ARCHITECT
APP: 02-122533 INC:
REVIEWED FOR
SS ☑ FLS ☑ ACS ☑
DATE: 05/22/2024

196

1715 R STREET, SUITE 200
SACRMENTO, CA 95811
TEL (916) 786-8178

CONSULTANTS

CIVIL ENGINEER
WARREN CONSULTING ENGINEERING, INC.
1117 Windfield Way, Suite 110
El Dorado Hills, CA 95762
TEL (916)-985-1870

MECHANICAL ENGINEER
WESTON & ASSOCIATES MECHANICAL ENGINEERS, INC.
601 University Avenue, Suite 260
Sacramento, CA 95825
TEL (916)-482-0820

ELECTRICAL ENGINEER
THE ENGINEERING ENTERPRISE
1305 Marina Village Parkway
Alameda, CA 94501
TEL (530)-927-5793

BUILDING MANUFACTURER
AMERICAN MODULAR SYSTEMS
787 Spreckels Avenue
Manteca, CA 95336
TEL (209)-825-1921

WCE
WARREN CONSULTING ENGINEERS, INC.
1117 WINDFIELD WAY, SUITE 110
EL DORADO HILLS, CA 95762 | (916) 985-1870

PROFESSIONAL STAMP

REGISTERED PROFESSIONAL ENGINEER
ANTHONY J. TASSANO
NO. 21469
STATE OF CALIFORNIA

NO.	DATE	DESCRIPTION

THE ARCHITECT DOES NOT REPRESENT THAT THESE PLANS OR THE SPECIFICATIONS ARE SUITABLE FOR ANY SITE OTHER THAN THE ONE FOR WHICH THEY WERE SPECIFICALLY PREPARED. THE ARCHITECT DISCLAIMS RESPONSIBILITY FOR THESE PLANS AND SPECIFICATIONS IF THEY ARE USED IN WHOLE OR IN PART AT ANY OTHER SITE. WRITTEN DIMENSIONS ON THESE DRAWINGS SHALL HAVE PRECEDENCE OVER SCALED DIMENSIONS.

GALT JOINT UNIION ELEMENTARY SCHOOL DISTRICT

1018 C Street, Suite 210
Galt, CA 95632

VERNON E. GREER ELEMENTARY SCHOOL RELOCATABLE BLGS

248 West A Street
Galt, CA 95632

SHEET TITLE

DEMOLITION PLAN

DRAWN BY: AT JOB NUMBER: 23544.01

SHEET NO.

C1.1

DATE: MARCH 11, 2024

CONSTRUCTION DOCUMENTS

FILENAME: I:\24-010\CIVIL\DWG\24-010-C11.DWG

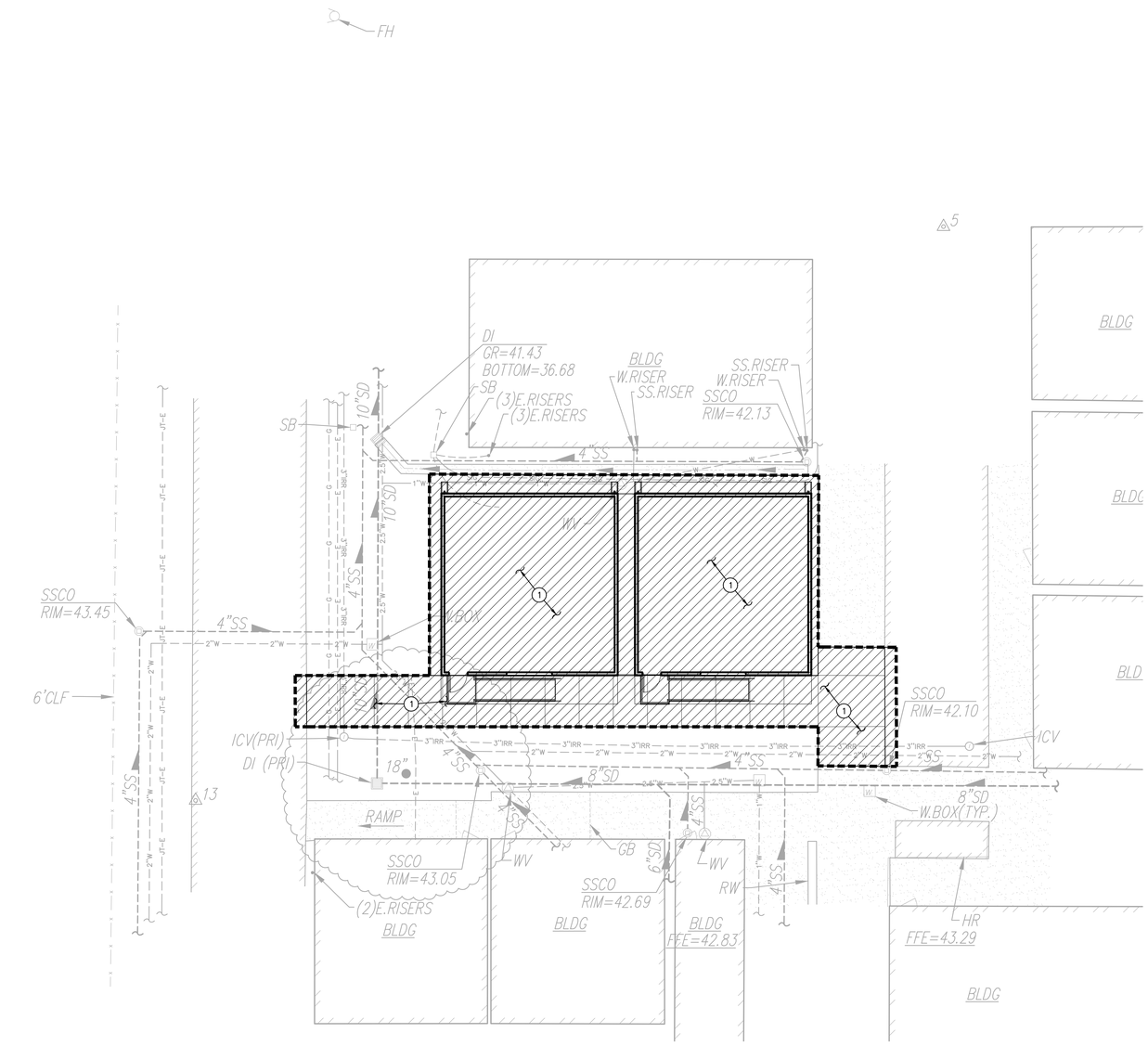

VIEW "A"

SCALE 1"=10'

SUBGRADE PREPARATION

1 FOLLOWING SITE DEMOLITION ACTIVITIES,

FOR AREAS TO BE CUT TO ACHIEVE SUBGRADE, EXCAVATE DOWN TO ROUGH SUBGRADE ELEVATION, SCARIFY THE EXISTING SOILS TO A MINIMUM DEPTH OF 12 INCHES AND UNIFORMLY MOISTURE CONDITION TO AT LEAST 2 PERCENT ABOVE THE OPTIMUM MOISTURE CONTENT AND COMPACT TO AT LEAST 90 PERCENT OF THE MAXIMUM DRY DENSITY PER ASTM D1557.

FOR AREAS TO BE FILLED TO ACHIEVE SUBGRADE, SCARIFY EXPOSED SOILS TO A MINIMUM DEPTH OF 12 INCHES AND UNIFORMLY MOISTURE CONDITION TO AT LEAST 2 PERCENT ABOVE OPTIMUM MOISTURE CONTENT AND COMPACT TO AT LEAST 90 PERCENT OF THE MAXIMUM DRY DENSITY PER ASTM D1557. FILL MATERIAL SHALL BE PLACED IN LEVEL LAYERS NOT EXCEEDING 6 INCHES IN COMPACTED THICKNESS. FILL SHALL BE COMPACTED TO AT LEAST 90 PERCENT OF THE MAXIMUM DRY DENSITY PER ASTM D1557.

THE UPPER 6 INCHES OF SUBGRADE SUPPORTING ASPHALT PAVING SHALL BE COMPACTED TO 95 PERCENT OF THE MAXIMUM DRY DENSITY PER ASTM D1557.

SUBGRADE PREPARATION SHALL EXTEND AT LEAST 2 FEET BEYOND EDGE OF PROPOSED ASPHALT AND CONCRETE PAVING WHEN NOT ABUTTING EXISTING PAVING..

GENERAL NOTES

1. IN THE EVENT THAT ANY UNUSUAL CONDITIONS NOT COVERED BY THE GEOTECHNICAL INVESTIGATION REPORT OR ARE ENCOUNTERED DURING GRADING OPERATIONS THE GEOTECHNICAL ENGINEER AND THE ARCHITECT SHALL BE IMMEDIATELY NOTIFIED FOR DIRECTIONS.
2. NO BURNING SHALL BE PERMITTED.
3. THE TYPES, LOCATIONS, SIZES AND/OR DEPTHS OF EXISTING UNDERGROUND UTILITIES AS SHOWN ON THESE PLAN WERE OBTAINED FROM SOURCES OF VARYING RELIABILITY. THE CONTRACTOR IS CAUTIONED THAT ONLY ACTUAL EXCAVATION WILL REVEAL THE TYPES, EXTENT, SIZES, LOCATIONS, AND DEPTHS OF SUCH UNDERGROUND UTILITIES. A REASONABLE EFFORT HAS BEEN MADE TO LOCATE AND DELINEATE ALL KNOWN UNDERGROUND UTILITIES. HOWEVER, WARREN CONSULTING ENGINEERS CAN ASSUME NO RESPONSIBILITY FOR THE COMPLETENESS OR ACCURACY OF ITS DELINEATION OF SUCH UNDERGROUND UTILITIES, NOR FOR THE EXISTENCE OF OTHER BURIED OBJECTS OR UTILITIES WHICH MAY BE ENCOUNTERED BUT WHICH ARE NOT SHOWN ON THESE DRAWINGS. THE CONTRACTOR OR ANY SUBCONTRACTOR FOR THIS CONTRACT SHALL NOTIFY THE DISTRICT TWO (2) WORKING DAYS IN ADVANCE OF PERFORMING ANY EXCAVATION WORK IN ORDER TO VERIFY TO THE GREATEST EXTENT POSSIBLE THE EXISTING UTILITY LINES, CONFLICTS AND PROPOSED UTILITY CONNECTION POINTS.

GRAPHIC SCALE

10' 0 5' 10' 20'

(IN FEET) 1 inch = 10 feet

NORTH

THIS DRAWING MAY HAVE BEEN ENLARGED OR REDUCED.

AGENCY APPROVAL DSA# 02-122533

IDENTIFICATION STAMP
DIV. OF THE STATE ARCHITECT
APP: 02-122533 INC:
REVIEWED FOR
SS ☑ FLS ☑ ACS ☑
DATE: 05/22/2024

196

1715 R STREET, SUITE 200
SACRMENTO, CA 95811
TEL (916) 786-8178

CONSULTANTS

CIVIL ENGINEER
WARREN CONSULTING ENGINEERING, INC.
1117 Windfield Way, Suite 110
El Dorado Hills, CA 95762
TEL (916)-985-1870

MECHANICAL ENGINEER
WESTON & ASSOCIATES MECHANICAL ENGINEERS, INC.
601 University Avenue, Suite 260
Sacramento, CA 95825
TEL (916)-482-0820

ELECTRICAL ENGINEER
THE ENGINEERING ENTERPRISE
1305 Marina Village Parkway
Alameda, CA 94501
TEL (530)-927-5793

BUILDING MANUFACTURER
AMERICAN MODULAR SYSTEMS
787 Spreckels Avenue
Manteca, CA 95336
TEL (209)-825-1921

WCE
WARREN CONSULTING ENGINEERS, INC.
1117 WINDFIELD WAY, SUITE 110
EL DORADO HILLS, CA 95762 | (916) 985-1870

PROFESSIONAL STAMP

REGISTERED PROFESSIONAL ENGINEER
ANTHONY J. TASSANO
NO. 074651
STATE OF CALIFORNIA

NO.	DATE	DESCRIPTION

THE ARCHITECT DOES NOT REPRESENT THAT THESE PLANS OR THE SPECIFICATIONS ARE SUITABLE FOR ANY SITE OTHER THAN THE ONE FOR WHICH THEY WERE SPECIFICALLY PREPARED. THE ARCHITECT DISCLAIMS RESPONSIBILITY FOR THESE PLANS AND SPECIFICATIONS IF THEY ARE USED IN WHOLE OR IN PART AT ANY OTHER SITE. WRITTEN DIMENSIONS ON THESE DRAWINGS SHALL HAVE PRECEDENCE OVER SCALED DIMENSIONS.

GALT JOINT UNIION ELEMENTARY SCHOOL DISTRICT

1018 C Street, Suite 210
Galt, CA 95632

VERNON E. GREER ELEMENTARY SCHOOL RELOCATABLE BLGS

248 West A Street
Galt, CA 95632

SHEET TITLE

ENGINEERED FILL PLAN

DRAWN BY: AT JOB NUMBER: 23544.01

SHEET NO.

C1.2

DATE: MARCH 11, 2024

CONSTRUCTION DOCUMENTS

FILENAME: I:\24-010\CIVIL\DWG\24-010-C12.DWG

GRADING NOTES

1. MATCH EXISTING GRADE/ELEVATION.
2. CONSTRUCT CONCRETE SIDEWALK PER (1/C5.1)
3. PLACE HEADER BOARD PER (2/C5.1)
4. CONSTRUCT SWALE.
5. PLACE SPLASH BLOCK AT DOWNSPOUT PER (3/C5.1)

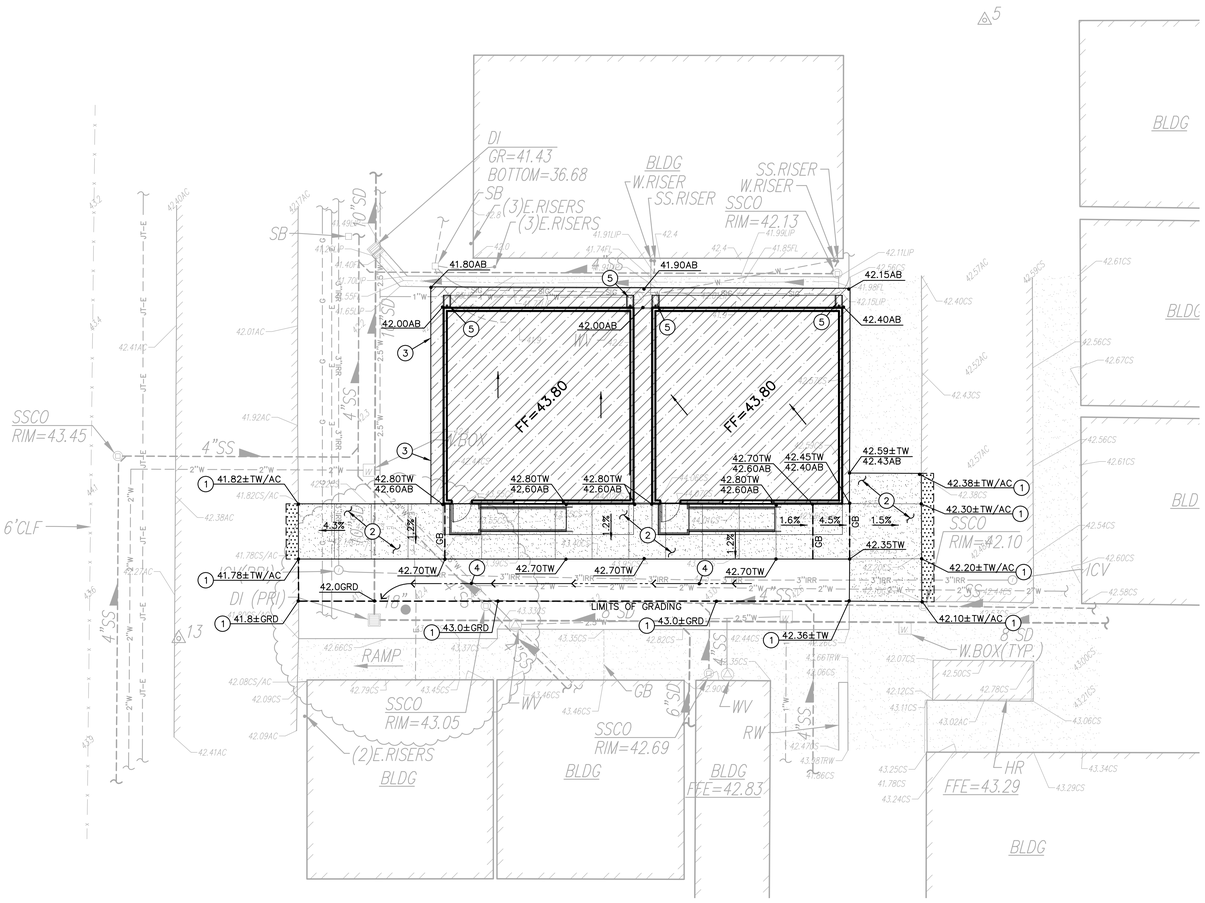

VIEW "A"

SCALE 1"=10'

GRAPHIC SCALE

10' 0 5' 10' 20'

(IN FEET) 1 inch = 10 feet

NORTH

THIS DRAWING MAY HAVE BEEN ENLARGED OR REDUCED.

AGENCY APPROVAL DSA# 02-122533

IDENTIFICATION STAMP
DIV. OF THE STATE ARCHITECT
APP: 02-122533 INC:
REVIEWED FOR
SS ☑ FLS ☑ ACS ☑
DATE: 05/22/2024

196

1715 R STREET, SUITE 200
SACRMENTO, CA 95811
TEL (916) 786-8178

CONSULTANTS

CIVIL ENGINEER
WARREN CONSULTING ENGINEERING, INC.
1117 Windfield Way, Suite 110
El Dorado Hills, CA 95762
TEL (916)-985-1870

MECHANICAL ENGINEER
WESTON & ASSOCIATES MECHANICAL ENGINEERS, INC.
601 University Avenue, Suite 260
Sacramento, CA 95825
TEL (916)-482-0820

ELECTRICAL ENGINEER
THE ENGINEERING ENTERPRISE
1305 Marina Village Parkway
Alameda, CA 94501
TEL (530)-927-5793

BUILDING MANUFACTURER
AMERICAN MODULAR SYSTEMS
787 Spreckels Avenue
Manteca, CA 95336
TEL (209)-825-1921

WCE
WARREN CONSULTING ENGINEERS, INC.
1117 WINDFIELD WAY, SUITE 110
EL DORADO HILLS, CA 95762 | (916) 985-1870

PROFESSIONAL STAMP

REGISTERED PROFESSIONAL ENGINEER
ANTHONY J. TASSANO
NO. 074691
STATE OF CALIFORNIA

NO.	DATE	DESCRIPTION

THE ARCHITECT DOES NOT REPRESENT THAT THESE PLANS OR THE SPECIFICATIONS ARE SUITABLE FOR ANY SITE OTHER THAN THE ONE FOR WHICH THEY WERE SPECIFICALLY PREPARED. THE ARCHITECT DISCLAIMS RESPONSIBILITY FOR THESE PLANS AND SPECIFICATIONS IF THEY ARE USED IN WHOLE OR IN PART AT ANY OTHER SITE. WRITTEN DIMENSIONS ON THESE DRAWINGS SHALL HAVE PRECEDENCE OVER SCALED DIMENSIONS.

GALT JOINT UNIION ELEMENTARY SCHOOL DISTRICT

1018 C Street, Suite 210
Galt, CA 95632

VERNON E. GREER ELEMENTARY SCHOOL RELOCATABLE BLGS

248 West A Street
Galt, CA 95632

SHEET TITLE

GRADING PLAN

DRAWN BY: AT JOB NUMBER: 23544.01

SHEET NO.

C2.1

DATE: MARCH 11, 2024

CONSTRUCTION DOCUMENTS

FILENAME: I:\24-010\CIVIL\DWG\24-010-C21.DWG

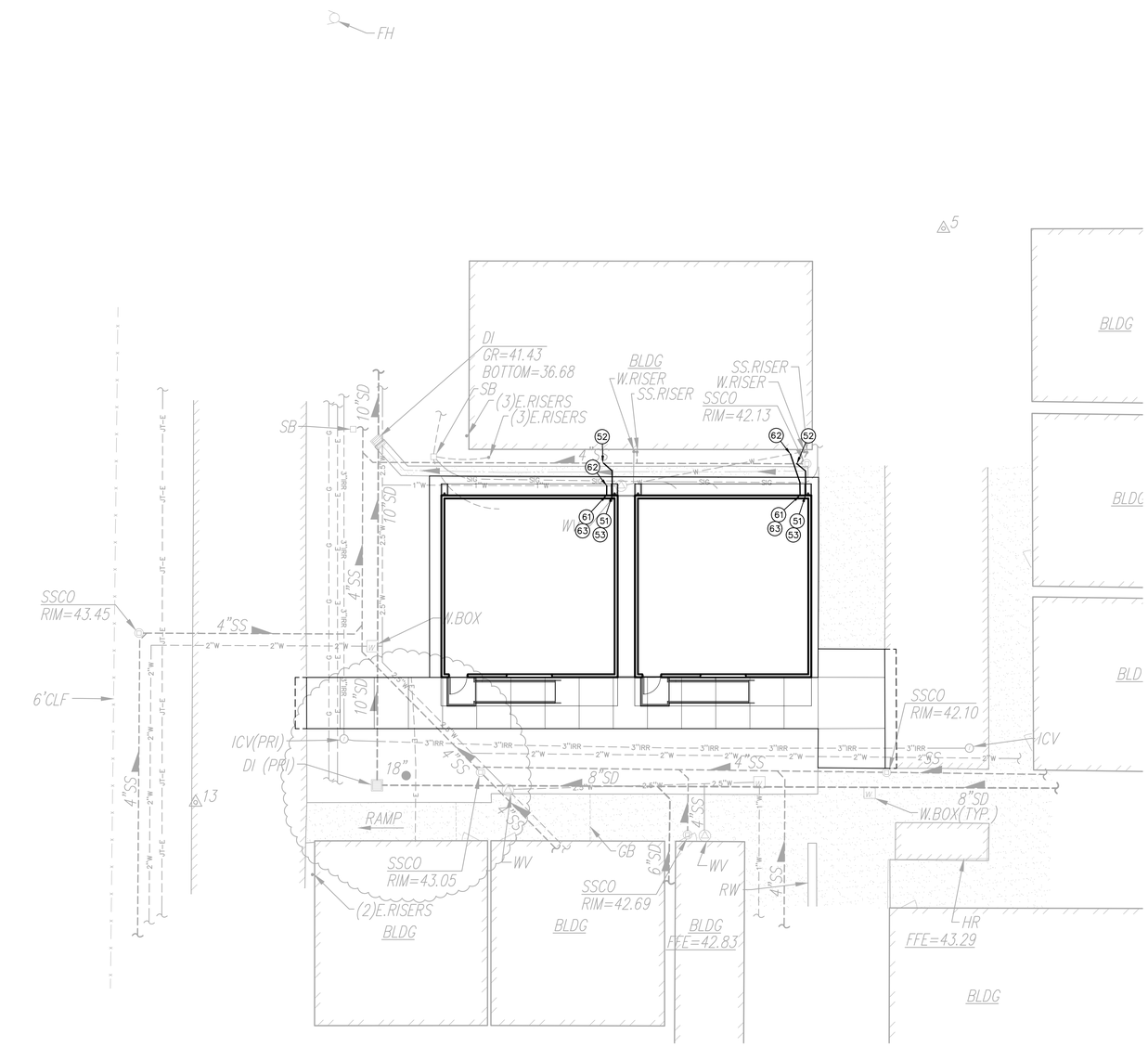

VIEW "A"

SCALE 1"=10'

SEWER NOTES

51. PLACE 4" SEWER PER (4/C5.1)
52. CONNECT TO EXISTING SEWER. FIELD VERIFY EXACT DEPTH, LOCATION AND CONDITION PRIOR TO TRENCHING. PROVIDE ALL FITTINGS NECESSARY TO MAKE CONNECTION.
53. CONNECT TO BUILDING SEWER SERVICE. COORDINATE EXACT LOCATION AND DEPTH AT BUILDING PRIOR TO TRENCHING. PROVIDE ALL FITTINGS NECESSARY TO MAKE CONNECTION.

WATER NOTES

61. PLACE 1" WATER, TYPE K COPPER PVC PER (5/C5.1)
62. CONNECT TO EXISTING DOMESTIC WATER LINE. FIELD VERIFY EXACT DEPTH AND LOCATION PRIOR TO TRENCHING. PROVIDE ALL FITTINGS NECESSARY TO MAKE CONNECTION.
63. CONNECT TO BUILDING DOMESTIC WATER SERVICE. COORDINATE EXACT LOCATION AND DEPTH AT BUILDING PRIOR TO TRENCHING. PROVIDE ALL FITTINGS NECESSARY TO MAKE CONNECTION.

GRAPHIC SCALE

10' 0 5' 10' 20'

(IN FEET) 1 inch = 10 feet

NORTH

THIS DRAWING MAY HAVE BEEN ENLARGED OR REDUCED.

AGENCY APPROVAL DSA# 02-122533

IDENTIFICATION STAMP
DIV. OF THE STATE ARCHITECT
APP: 02-122533 INC:
REVIEWED FOR
SS ☑ FLS ☑ ACS ☑
DATE: 05/22/2024

196

1715 R STREET, SUITE 200
SACRMENTO, CA 95811
TEL (916) 786-8178

CONSULTANTS

CIVIL ENGINEER
WARREN CONSULTING ENGINEERING, INC.
1117 Windfield Way, Suite 110
El Dorado Hills, CA 95762
TEL (916)-985-1870

MECHANICAL ENGINEER
WESTON & ASSOCIATES MECHANICAL ENGINEERS, INC.
601 University Avenue, Suite 260
Sacramento, CA 95825
TEL (916)-482-0820

ELECTRICAL ENGINEER
THE ENGINEERING ENTERPRISE
1305 Marina Village Parkway
Alameda, CA 94501
TEL (530)-927-5793

BUILDING MANUFACTURER
AMERICAN MODULAR SYSTEMS
787 Spreckels Avenue
Manteca, CA 95336
TEL (209)-825-1921

WCE
WARREN CONSULTING ENGINEERS, INC.
1117 WINDFIELD WAY, SUITE 110
EL DORADO HILLS, CA 95762 | (916) 985-1870

PROFESSIONAL STAMP

REGISTERED PROFESSIONAL ENGINEER
ANTHONY J. TASSANO
NO. C14686
STATE OF CALIFORNIA

#	NO.	DATE	DESCRIPTION

THE ARCHITECT DOES NOT REPRESENT THAT THESE PLANS OR THE SPECIFICATIONS ARE SUITABLE FOR ANY SITE OTHER THAN THE ONE FOR WHICH THEY WERE SPECIFICALLY PREPARED. THE ARCHITECT DISCLAIMS RESPONSIBILITY FOR THESE PLANS AND SPECIFICATIONS IF THEY ARE USED IN WHOLE OR IN PART AT ANY OTHER SITE. WRITTEN DIMENSIONS ON THESE DRAWINGS SHALL HAVE PRECEDENCE OVER SCALED DIMENSIONS.

GALT JOINT UNIION ELEMENTARY SCHOOL DISTRICT

1018 C Street, Suite 210
Galt, CA 95632

VERNON E. GREER ELEMENTARY SCHOOL RELOCATABLE BLGS

248 West A Street
Galt, CA 95632

SHEET TITLE

UTILITY PLAN

DRAWN BY: AT JOB NUMBER: 23544.01

SHEET NO.

C3.1

DATE: MARCH 11, 2024

CONSTRUCTION DOCUMENTS

FILENAME: I:\24-010\CIVIL\DWG\24-010-C31.DWG

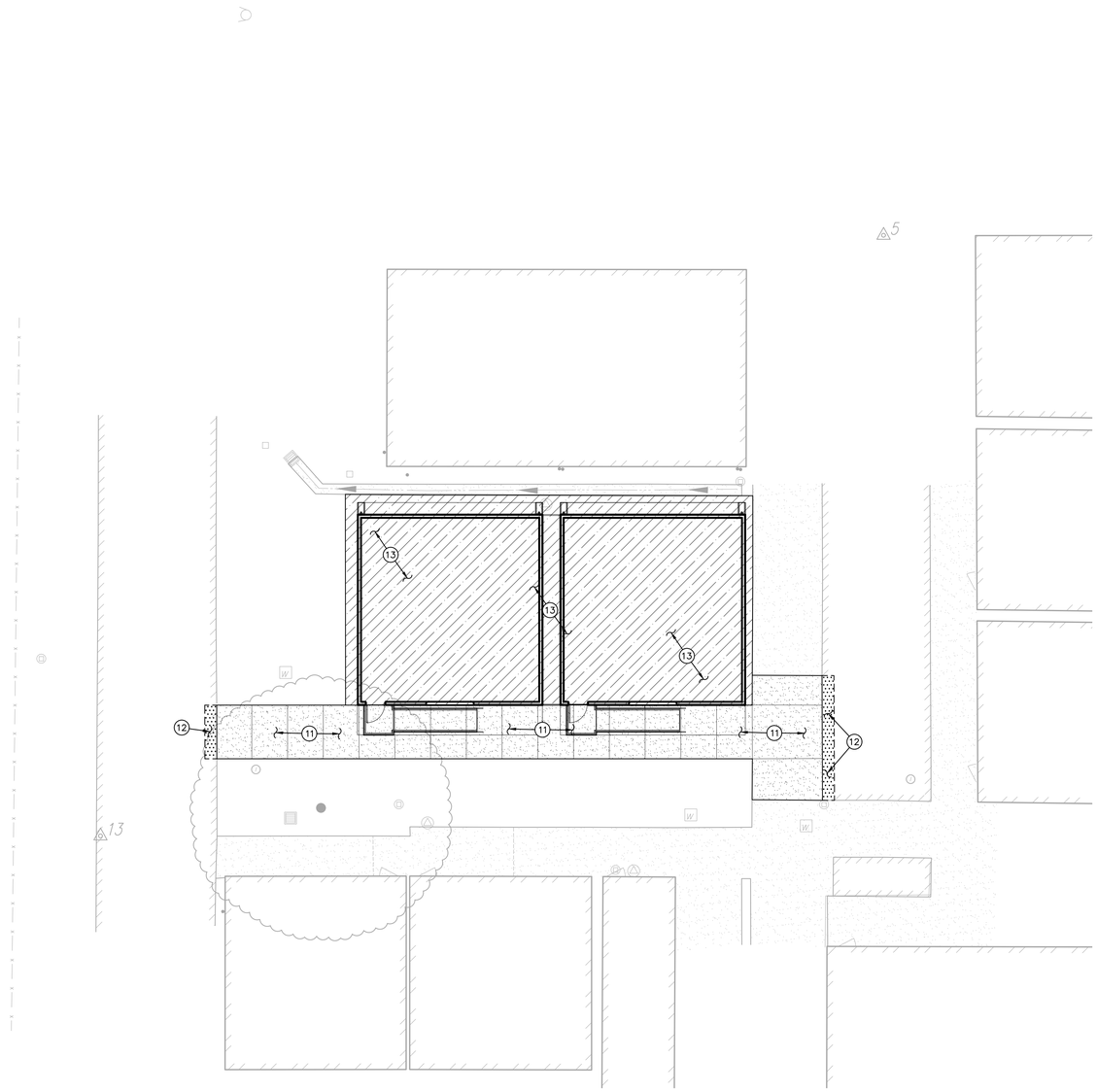

VIEW "A"

SCALE 1"=10'

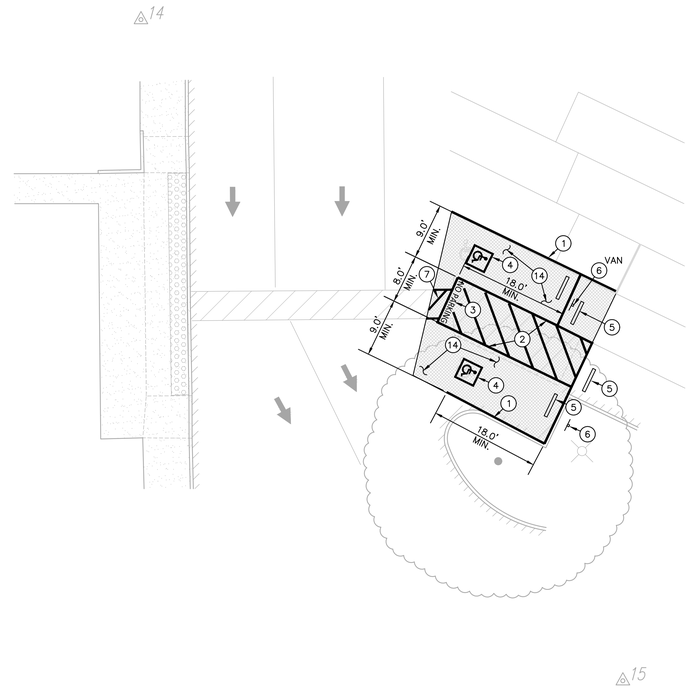

VIEW "B"

SCALE 1"=10'

PAVING GENERAL NOTES:

1. AGGREGATE BASE SHALL MEET CALTRANS SPECIFICATIONS FOR CLASS II AGGREGATE BASE.
2. ALL AGGREGATE BASE SHALL BE MOISTURE CONDITIONED TO, OR SLIGHTLY ABOVE, OPTIMUM MOISTURE CONTENT AND COMPACTED TO 95% RELATIVE COMPACTION.
3. RECYCLED ASPHALT MAY BE USED AS CONCRETE AND ASPHALT BASE MATERIAL PROVIDED IT MEETS CALTRANS SPECIFICATIONS FOR CLASS II AB.
4. PAVEMENT SUBGRADE PREPARATION, I.E. SCARIFICATION, MOISTURE CONDITIONING, AND COMPACTION SHALL BE PERFORMED AFTER;
   A. POT HOLING ALL EXISTING UTILITIES.
   B. THE INSTALLATION OF UNDERGROUND UTILITIES AND TRENCHES BACKFILLED IN ACCORDANCE WITH THESE PLANS.
5. ALL AREAS DISTURBED BY GRADING, DEMOLITION, OR CONSTRUCTION ACCESS, WHICH ARE NOT SURFACED BY THIS SET OF PLANS, OR LANDSCAPE PLANS, SHALL BE RESTORED.
6. REFER TO GRADING PLANS FOR CURBS, CURB GUTTERS, VALLEY GUTTERS, AND OTHER CONCRETE STRUCTURES AND PAVING FEATURES NOT SPECIFICALLY NOTED ON THIS PLAN.
7. ADJUST TO FINISH GRADE ALL BOXES, FRAMES, COVERS SLEEVES, POST HOLES, GRATES, ETC. FOUND IN NEW ASPHALT OR CONCRETE PAVING AREAS, WHICH ARE NOT NOTED FOR REMOVAL. REPLACE PER PLAN.

PAVING LEGEND

(11) TYPE 11 PAVING
PLACE 5" PCC WITH #4 REBAR @ 24" O.C.E.W. OVER 12" CLASS II AB ON SUBGRADE COMPACTED PER ENGINEERED FILL PLAN AND SPECIFICATIONS. (1 / C5.1)

(12) TYPE 12 PAVING
PLACE 3" OVER 12" CLASS II AB ON SUBGRADE COMPACTED PER ENGINEERED FILL PLAN AND SPECIFICATIONS.

(13) TYPE 13 PAVING
PLACE 12" OF CLASS II AB ON SUBGRADE COMPACTED PER ENGINEERED FILL PLAN AND SPECIFICATIONS.

(14) TYPE 14 PAVING
BLACK OUT EXISTING STRIPING, CRACK FILL, AND PROVIDE TWO (2) APPLICATIONS OF SEAL COAT.

(#) STRIPING SIGNAGE PLAN

1. PAINT 4" WIDE WHITE STRIPE.
2. PAINT 4" WIDE BLUE STRIPING AROUND PERIMETER OF ACCESSIBLE LOADING AREA WITH BLUE CROSS HATCH STRIPING. STRIPES SHALL BE 4" WIDE AND 36" O.C. AND 30° FROM PERPENDICULAR WITH PERIMETER STRIPING.
3. PAINT 12" HIGH WHITE LETTERING EXPRESSING "NO PARKING".
4. PAINT INTERNATIONAL SYMBOL FOR ACCESSIBILITY PARKING STALL SYMBOL IN ACCORDANCE WITH THE DIMENSIONS AND COLORING SHOWN IN THE PROVIDED DETAIL. (3 / C4.1)
5. PLACE 48" LONG CONCRETE WHEEL STOP PER THE DETAIL PROVIDED. (2 / C4.1)
6. INSTALL ACCESSIBLE PARKING SIGN PER THE DETAIL PROVIDED. WHERE SHOWN ON PLAN AS "VAN" ACCESSIBLE STALL, PROVIDE EXTRA "VAN ACCESSIBLE" SIGN AS SHOWN IN DETAIL. POST MAY BE OMITTED WHERE FENCE IS PRESENT TO MOUNT SIGN AS SHOWN. MOUNT AT HEIGHT PER DETAIL WITH APPROPRIATE STAINLESS SCREWS. (1 / C4.1)
7. PAINT 4" WIDE BLUE STRIPE WITH 4" WIDE WHITE CROSS HATCH STRIPING AT 45° @ 36" O.C.

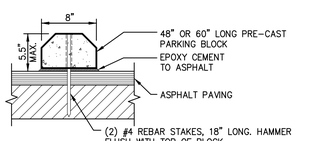

2 / C4.1 CONCRETE WHEEL STOP

NO SCALE

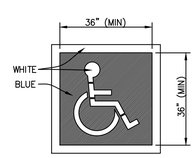

NOTES:
1. THIS PARKING SYMBOL IS ALSO KNOWN AS THE INTERNATIONAL SYMBOL OF ACCESSIBILITY (ISA).

3 / C4.1 ACCESSIBLE STRIPING

NO SCALE

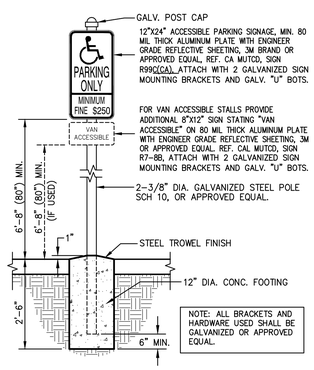

1 / C4.1 PARKING SIGNAGE
ACCESSIBLE STALLS (CALIFORNIA ONLY)

NO SCALE

GRAPHIC SCALE

10' 0 5' 10' 20'

(IN FEET) 1 inch = 10 feet

NORTH

THIS DRAWING MAY HAVE BEEN ENLARGED OR REDUCED.

AGENCY APPROVAL DSA# 02-122533

IDENTIFICATION STAMP
DIV. OF THE STATE ARCHITECT
APP: 02-122533 INC:
REVIEWED FOR
SS ☑ FLS ☑ ACS ☑
DATE: 05/22/2024

196

1715 R STREET, SUITE 200
SACRMENTO, CA 95811
TEL (916) 786-8178

CONSULTANTS

CIVIL ENGINEER
WARREN CONSULTING ENGINEERING, INC.
1117 Windfield Way, Suite 110
El Dorado Hills, CA 95762
TEL (916)-985-1870

MECHANICAL ENGINEER
WESTON & ASSOCIATES MECHANICAL ENGINEERS, INC.
601 University Avenue, Suite 260
Sacramento, CA 95825
TEL (916)-482-0820

ELECTRICAL ENGINEER
THE ENGINEERING ENTERPRISE
1305 Marina Village Parkway
Alameda, CA 94501
TEL (530)-927-5793

BUILDING MANUFACTURER
AMERICAN MODULAR SYSTEMS
787 Spreckels Avenue
Manteca, CA 95336
TEL (209)-825-1921

WARREN CONSULTING ENGINEERS, INC.
1117 WINDFIELD WAY, SUITE 110
EL DORADO HILLS, CA 95762 | (916) 985-1870

PROFESSIONAL STAMP

REGISTERED PROFESSIONAL ENGINEER
ANTHONY J. TASSANO
NO. 71491
STATE OF CALIFORNIA

# NO.	DATE	DESCRIPTION

THE ARCHITECT DOES NOT REPRESENT THAT THESE PLANS OR THE SPECIFICATIONS ARE SUITABLE FOR ANY SITE OTHER THAN THE ONE FOR WHICH THEY WERE SPECIFICALLY PREPARED. THE ARCHITECT DISCLAIMS RESPONSIBILITY FOR THESE PLANS AND SPECIFICATIONS IF THEY ARE USED IN WHOLE OR IN PART AT ANY OTHER SITE. WRITTEN DIMENSIONS ON THESE DRAWINGS SHALL HAVE PRECEDENCE OVER SCALED DIMENSIONS.

GALT JOINT UNIION ELEMENTARY SCHOOL DISTRICT

1018 C Street, Suite 210
Galt, CA 95632

VERNON E. GREER ELEMENTARY SCHOOL RELOCATABLE BLGS

248 West A Street
Galt, CA 95632

SHEET TITLE

PAVING AND STRIPING PLAN

DRAWN BY: AT JOB NUMBER: 23544.01

SHEET NO.

C4.1

DATE: MARCH 11, 2024

CONSTRUCTION DOCUMENTS

FILENAME: I:\24-010\CIVIL\DWG\24-010-C41.DWG

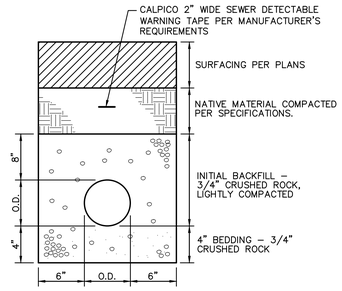

4 C5.1 SEWER TRENCH

NO SCALE

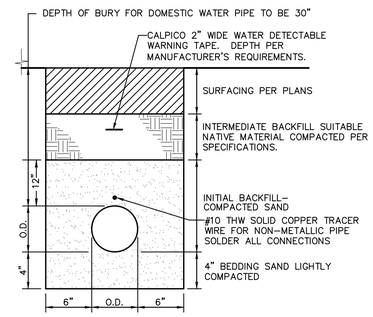

5 C5.1 WATER TRENCH

NO SCALE

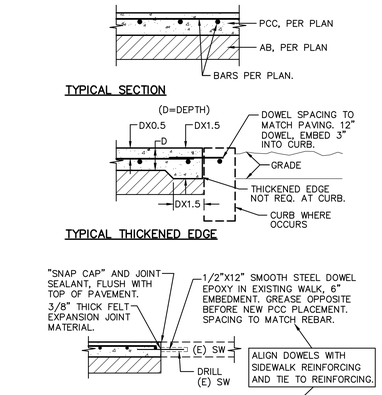

NOTES:

1. PROVIDE FELT EXPANSION JOINTS AT 20 FEET O.C. MAX. SEE PLAN FOR LAYOUT.
2. PROVIDE CONTROL JOINTS AT 10 FEET O.C. MAX. SEE PLAN FOR LAYOUT.
3. EXPANSION OR CONTROL JOINTS SHALL NOT EXCEED 1/2" IN SURFACE WIDTH.

1 C5.1 CONCRETE SIDEWALK

NO SCALE

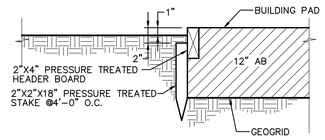

2 C5.1 HEADER BOARD

NO SCALE

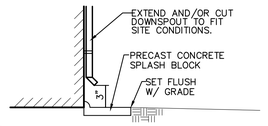

3 C5.1 SPLASH BLOCK

NO SCALE

AGENCY APPROVAL DSA# 02-122533

IDENTIFICATION STAMP
DIV. OF THE STATE ARCHITECT
APP: 02-122533 INC:
REVIEWED FOR
SS ☑ FLS ☑ ACS ☑
DATE: 05/22/2024

196

1715 R STREET, SUITE 200
SACRMENTO, CA 95811
TEL (916) 786-8178

CONSULTANTS

CIVIL ENGINEER
WARREN CONSULTING ENGINEERING, INC.
1117 Windfield Way, Suite 110
El Dorado Hills, CA 95762
TEL (916)-985-1870

MECHANICAL ENGINEER
WESTON & ASSOCIATES MECHANICAL ENGINEERS, INC.
601 University Avenue, Suite 260
Sacramento, CA 95825
TEL (916)-482-0820

ELECTRICAL ENGINEER
THE ENGINEERING ENTERPRISE
1305 Marina Village Parkway
Alameda, CA 94501
TEL (530)-927-5793

BUILDING MANUFACTURER
AMERICAN MODULAR SYSTEMS
787 Spreckels Avenue
Manteca, CA 95336
TEL (209)-825-1921

WCE
WARREN CONSULTING ENGINEERS, INC.
1117 WINDFIELD WAY, SUITE 110
EL DORADO HILLS, CA 95762 | (916) 985-1870

PROFESSIONAL STAMP

REGISTERED PROFESSIONAL ENGINEER
ANTHONY J. TASSANO
NO. C74686
STATE OF CALIFORNIA

NO.	DATE	DESCRIPTION

THE ARCHITECT DOES NOT REPRESENT THAT THESE PLANS OR THE SPECIFICATIONS ARE SUITABLE FOR ANY SITE OTHER THAN THE ONE FOR WHICH THEY WERE SPECIFICALLY PREPARED. THE ARCHITECT DISCLAIMS RESPONSIBILITY FOR THESE PLANS AND SPECIFICATIONS IF THEY ARE USED IN WHOLE OR IN PART AT ANY OTHER SITE. WRITTEN DIMENSIONS ON THESE DRAWINGS SHALL HAVE PRECEDENCE OVER SCALED DIMENSIONS.

GALT JOINT UNIION ELEMENTARY SCHOOL DISTRICT

1018 C Street, Suite 210
Galt, CA 95632

VERNON E. GREER ELEMENTARY SCHOOL RELOCATABLE BLGS

248 West A Street
Galt, CA 95632

SHEET TITLE

DETAILS AND SECTIONS

DRAWN BY: AT JOB NUMBER: 23544.01

SHEET NO.

C5.1

DATE: MARCH 11, 2024

CONSTRUCTION DOCUMENTS

FILENAME: I:\24–010\CIVIL\DWG\24–010–C51.DWG

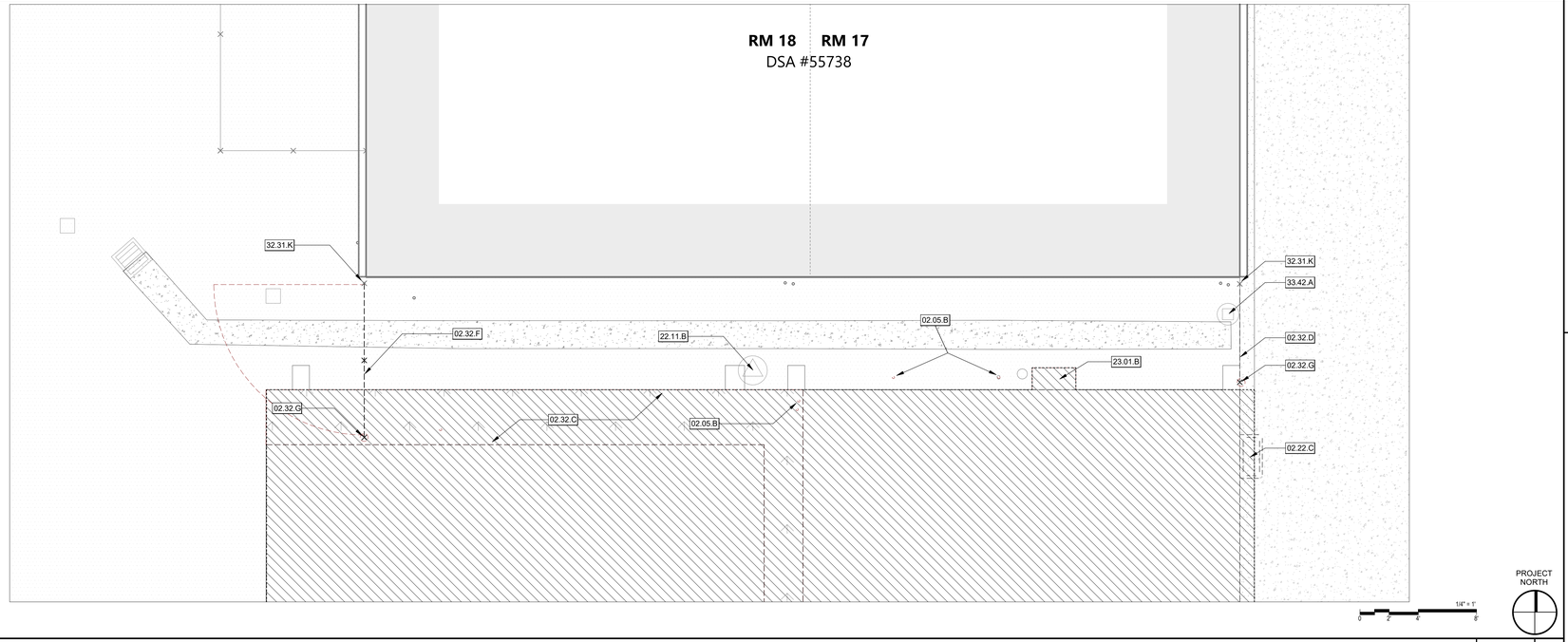

DEMOLITION FENCE PLAN | 1/4" = 1'-0" | **1**

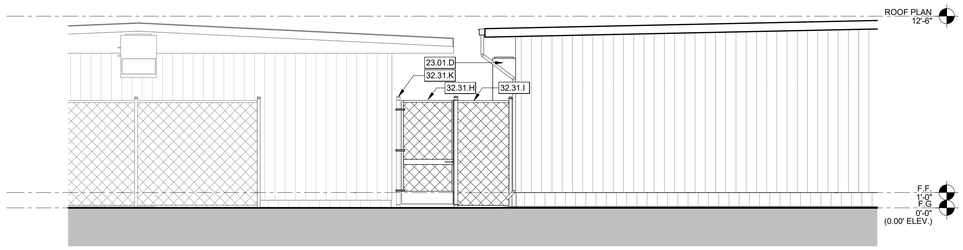

WEST ELEVATION | 1/4" = 1'-0" | **2**

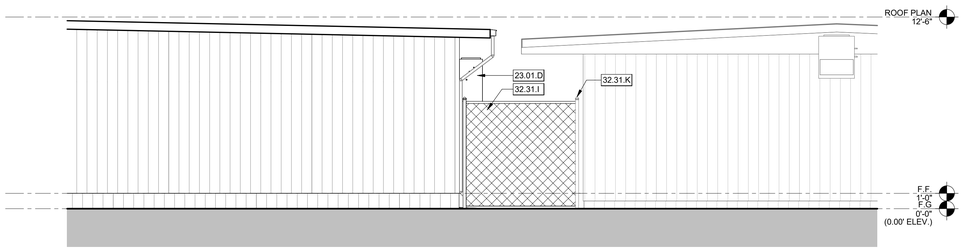

EAST ELEVATION | 1/4" = 1'-0" | **3**

KEYNOTES

02.05.B	DEMO (E) PIPE OR BOLLARD
02.22.C	DEMO (E) DRINKING FOUNTAIN
02.32.C	DEMO (E) LANDSCAPING
02.32.D	REMOVE CAREFULLY SECTION OF (E) CHAINLINK FENCE AND REINSTALL AS REQUIRED AFTER (N) BUILDING IS INSTALLED
02.32.F	DEMO (E) CHAINLINK GATE AND REINSTALL AS REQUIRED AFTER (N) BUILDING IS INSTALLED
02.32.G	DEMO (E) FENCE POST
22.11.B	(E) WATER VALVE
23.01.B	DEMO (E) HVAC UNIT
23.01.D	(N) HVAC UNIT
32.31.H	(N) 3'-6" WIDE SERVICE GATE. PER 11/A-111
32.31.I	(N) 7'-0" TALL CHAINLINK FENCE. PER 12/A-111
32.31.K	(E) FENCE POST TO REMAIN
33.42.A	(E) SANITARTY SEWER CLEANOUT

DEMO GENERAL NOTES

1. SEE CIVIL, MECHANICAL, ELECTRICAL AND PLUMBING DRAWINGS FOR ADDITIONAL DEMOLITION SCOPE OF WORK.

LEGEND - DEMOLITION

(E) BUILDINGS (NO WORK TO BE DONE)

EXTENT OF DEMO WORK (DEMOLISH ALL HARDSCAPE AND LANDSCAPING AND SALVAGE ALL SITE FURNISHINGS AND SIGNAGE AS POSSIBLE) SEE PLAN FOR FURTHER INFORMATION

(E) BUILDING TO BE DEMOLISHED

AGENCY APPROVAL DSA# 02-122533
FILE NO. 39-24

IDENTIFICATION STAMP
DIV. OF THE STATE ARCHITECT
APP: 02-122533 INC:
REVIEWED FOR
SS ☑ FLS ☑ ACS ☑
DATE: 05/22/2024

196

1715 R STREET, SUITE 200
SACRAMENTO, CA 95811
TEL (916) 786-8178

CONSULTANTS

CIVIL ENGINEER
WARREN CONSULTING ENGINEERING, INC.
1117 Windfield Way, Suite 110
El Dorado Hills, CA 95762
TEL (916)-985-1870

PLUMBING ENGINEER
WESTON & ASSOCIATES MECHANICAL ENGINEERS, INC.
601 University Avenue, Suite 260
Sacramento, CA 95825
TEL (916)-482-0820

ELECTRICAL ENGINEER
THE ENGINEERING ENTERPRISE
1305 Marina Village Parkway
Alameda, CA 94501
TEL (530)-927-5793

BUILDING MANUFACTURER
AMERICAN MODULAR SYSTEMS
787 Spreckels Avenue
Manteca, CA 95336
TEL (209)-825-1921

PROFESSIONAL STAMP

LICENSED ARCHITECT
MARINA ALVAREZ PEREZ
C-36107
REN. 01-31-25
STATE OF CALIFORNIA

REVISIONS

NO.	DATE	DESCRIPTION

THE ARCHITECT DOES NOT REPRESENT THAT THESE PLANS OR THE SPECIFICATIONS ARE SUITABLE FOR ANY SITE OTHER THAN THE ONE FOR WHICH THEY WERE SPECIFICALLY PREPARED. THE ARCHITECT DISCLAIMS RESPONSIBILITY FOR THESE PLANS AND SPECIFICATIONS IF THEY ARE USED IN WHOLE OR IN PART AT ANY OTHER SITE. WRITTEN DIMENSIONS ON THESE DRAWINGS SHALL HAVE PRECEDENCE OVER SCALED DIMENSIONS.

PROJECT OWNER & TITLE
GALT JOINT UNION ELEMENTARY SCHOOL DISTRICT
1018 C Street, Suite 210
Galt, CA 95632

VERNON E. GREER ELEMENTARY SCHOOL RELOCATABLE BUILDINGS
248 West A Street
Galt, CA 95632

SHEET TITLE
DEMOLITION FENCE PLAN AND ELEVATIONS

DRAWN BY: BI JOB NUMBER: 23544.01

SHEET NO.
A-021

DATE: MAY 15, 2024

FILE LOCATION: Autodesk Docs://23544 Greer Portable Classrooms/23544.01_Greer ES New Relocatable Blgs_A24.rvt
DATE PLOTTED: 5/9/2024 1:24:17 PM

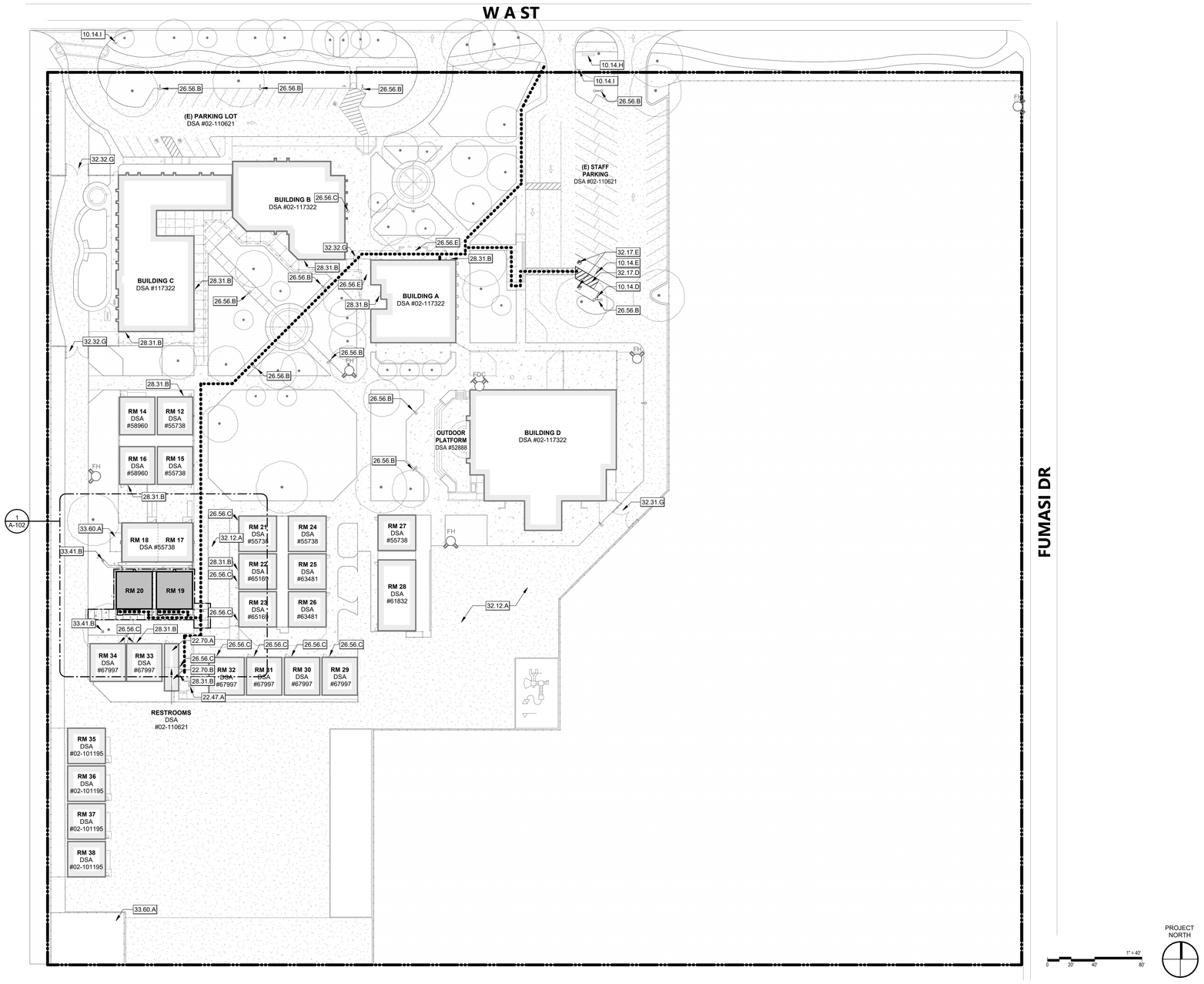

SITE PLAN - OVERALL | 1" = 40'-0" | 1

KEYNOTES

10.14.D	(N) REGULAR ACCESSIBLE STALL SIGN. SEE B/C4.1
10.14.E	(N) VAN ACCESSIBLE STALL SIGN. SEE B/C4.1
10.14.H	(E) SCHOOL SIGN
10.14.I	(E) TOW AWAY SIGN. SEE DETAIL 9/A-111
22.47.A	(E) HI-LOW DRINKING FOUNTAIN
22.70.A	(E) GIRLS RESTROOM DSA #02-110621.
22.70.B	(E) BOYS RESTROOM DSA #02-110621.
26.56.B	(E) LIGHT STANDARD
26.56.C	(E) EXTERIOR LIGHT FIXTURE
26.56.E	(E) EXTERIOR LIGHTING ALONG (E) COVERED WALKWAY
28.31.B	(E) EXTERIOR FIRE ALARM NOTIFICATION DEVICE
32.12.A	(E) ASPHALT PAVING
32.17.D	(N) 4" WIDE BLUE STRIPING. BLUE 15090 FEDERAL STANDARD 595A. SEE B/C4.1
32.17.E	(N) 36" X 36" INTERNATIONAL SYMBOL OF ACCESSIBILITY. SEE B/C4.1
32.31.G	(E) CHAINLINK GATE
32.32.G	(E) DECORATIVE GATE WITH PANIC HARDWARE
33.41.B	(E) DROP INLET
33.60.A	(E) UTILITY ENCLOSURE

SITE GENERAL NOTES

1. ALL NEW CONCRETE AND AC PAVING IN P.O.T. SHALL HAVE 2% MAX. SLOPE IN ALL DIRECTIONS U.N.O. AND SHALL HAVE FLUSH TRANSITIONS TO ALL ADJACENT NEW AND EXISTING WALK SURFACES IN P.O.T. .
2. ALL LANDSCAPE EDGES ALONG ALL NEW OR EXISTING WALK SURFACES IN P.O.T. SHALL BE PER CIVIL DRAWINGS.
3. FOR GRATINGS OR STRAINERS LOCATED IN THE SURFACE OF ANY PEDESTRIAN WAY OR IN P.O.T., THE MAXIMUM GRATE OR STRAINER OPENINGS SHALL NOT EXCEED 1/2" IN THE DIRECTION OF TRAFFIC FLOW.
4. THE P.O.T. IDENTIFIED IN THESE CONSTRUCTION DOCUMENTS IS COMPLIANT WITH THE CURRENT APPLICABLE CALIFORNIA BUILDING CODE ACCESSIBILITY PROVISIONS FOR THE PATH OF TRAVEL REQUIREMENTS FOR ALTERATIONS, ADDITIONS, AND STRUCTURAL REPAIRS. AS PART OF THE DESIGN OF THIS PROJECT, THE P.O.T. WAS EXAMINED AND ANY ELEMENTS, COMPONENTS OR PORTIONS OF THE P.O.T. THAT WERE DETERMINED TO BE NON-COMPLIANT 1) HAVE BEEN IDENTIFIED AND 2) THE CORRECTIVE WORK NECESSARY TO BRING THEM INTO COMPLIANCE HAS BEEN INCLUDED WITHIN THE SCOPE OF THIS PROJECT'S WORK THROUGH DETAILS, DRAWINGS AND SPECIFICATIONS INCORPORATED INTO THESE CONSTRUCTION DOCUMENTS. ANY NON-COMPLIANT ELEMENTS, COMPONENTS, OR PORTIONS OF THE P.O.T. THAT WILL NOT BE CORRECTED BY THIS PROJECT BASED ON VALUATION THRESHOLD LIMITATIONS OR A FINDING OF UNREASONABLE HARDSHIP ARE SO INDICATED IN THESE CONSTRUCTION DOCUMENTS. DURING CONSTRUCTION, IF POT ITEMS WITHIN THE SCOPE OF THE PROJECT REPRESENTED AS CODE COMPLIANT ARE FOUND TO BE NON-CONFORMING BEYOND REASONABLE CONSTRUCTION TOLERANCES, THEY SHALL BE BROUGHT INTO COMPLIANCE WITH THE CBC AS PART OF THIS PROJECT BY MEANS OF A CONSTRUCTION CHANGE DOCUMENT.

LEGEND - SITE PLAN

- ASSUMED PROPERTY LINE
- LIMITS OF WORK
- PROJECT BUILDING
- (N) CONCRETE PAVING
  - EXPANSION JOINT PER CIVIL DRAWINGS. SEE 1/C5.1
  - CONTROL JOINT PER CIVIL DRAWINGS. SEE 1/C5.1
- (E) ASPHALT
- (E) BUILDING
- (E) LANDSCAPING

PATH OF TRAVEL (P.O.T.)

- AS INDICATED, IS A COMMON BARRIER FREE ACCESS ROUTE
- IS AT LEAST 48" WIDE.
- NO ABRUPT VERTICAL CHANGES EXCEEDING 1/2" BEVELED AT 1:2 MAXIMUM SLOPE, EXCEPT THAT LEVEL CHANGES DO NOT EXCEED 1/4" VERTICAL
- THE PATH SURFACE IS SLIP RESISTANT, STABLE, FIRM, AND SMOOTH.
- PASSING SPACES (11B-403.2) AT LEAST 60"x60" ARE LOCATED NOT MORE THAN 200' APART.
- PARTS OF P.O.T. WITH CONTINUOUS GRADIENTS HAVE 60" LEVEL AREAS (11B-403.7) NOT MORE THAN 400' APART.
- THE CROSS-SLOPE DOES NOT EXCEED 2% AND SLOPE IN THE DIRECTION OF TRAVEL IS LESS THAN 5% UNLESS OTHERWISE INDICATED.
- (POT) SHALL BE MAINTAINED FREE OF OVERHANGING OBSTRUCTIONS TO 80" MINIMUM (11B-307.4) AND PROTRUDING OBJECTS GREATER THAN 4" PROJECTION FROM WALL AND ABOVE 27" AND LESS THAN 80" (11B-307).
- ARCHITECT SHALL VERIFY PATH OF TRAVEL CONFORMS WITH THE ABOVE.

- (E) FENCE LINE
- FH — (E) FIRE HYDRANT
- FDC — (E) FIRE DEPT. CONNECTION
- (E) TREE

AGENCY APPROVAL DSA# 02-122533
FILE NO. 39-24

IDENTIFICATION STAMP
DIV. OF THE STATE ARCHITECT
APP: 02-122533 INC:
REVIEWED FOR
SS ☑ FLS ☑ ACS ☑
DATE: 05/22/2024

196
1715 R STREET, SUITE 200
SACRAMENTO, CA 95811
TEL (916) 786-8178

CONSULTANTS

CIVIL ENGINEER
WARREN CONSULTING ENGINEERING, INC.
1117 Windfield Way, Suite 110
El Dorado Hills, CA 95762
TEL (916)-985-1870

PLUMBING ENGINEER
WESTON & ASSOCIATES MECHANICAL ENGINEERS, INC.
601 University Avenue, Suite 260
Sacramento, CA 95825
TEL (916)-482-0820

ELECTRICAL ENGINEER
THE ENGINEERING ENTERPRISE
1305 Marina Village Parkway
Alameda, CA 94501
TEL (530)-927-5793

BUILDING MANUFACTURER
AMERICAN MODULAR SYSTEMS
787 Spreckels Avenue
Manteca, CA 95336
TEL (209)-825-1921

PROFESSIONAL STAMP

LICENSED ARCHITECT
MARIANA ALVAREZ PEREZ
C-36107
REN. 01-31-25
STATE OF CALIFORNIA

REVISIONS

NO.	DATE	DESCRIPTION

THE ARCHITECT DOES NOT REPRESENT THAT THESE PLANS OR THE SPECIFICATIONS ARE SUITABLE FOR ANY SITE OTHER THAN THE ONE FOR WHICH THEY WERE SPECIFICALLY PREPARED. THE ARCHITECT DISCLAIMS RESPONSIBILITY FOR THESE PLANS AND SPECIFICATIONS IF THEY ARE USED IN WHOLE OR IN PART AT ANY OTHER SITE. WRITTEN DIMENSIONS ON THESE DRAWINGS SHALL HAVE PRECEDENCE OVER SCALED DIMENSIONS.

PROJECT OWNER & TITLE
GALT JOINT UNION ELEMENTARY SCHOOL DISTRICT
1018 C Street, Suite 210
Galt, CA 95632

VERNON E. GREER ELEMENTARY SCHOOL RELOCATABLE BUILDINGS
248 West A Street
Galt, CA 95632

SHEET TITLE
OVERALL SITE PLAN

DRAWN BY: BI JOB NUMBER: 23544.01

SHEET NO.
A-101

DATE: MAY 15, 2024

DATE PLOTTED: 5/9/2024 1:24:19 PM FILE LOCATION: Autodesk Docs://23544 Greer Portable Classrooms/23544.01_Greer ES New Relocatable Blgs_A24.rvt

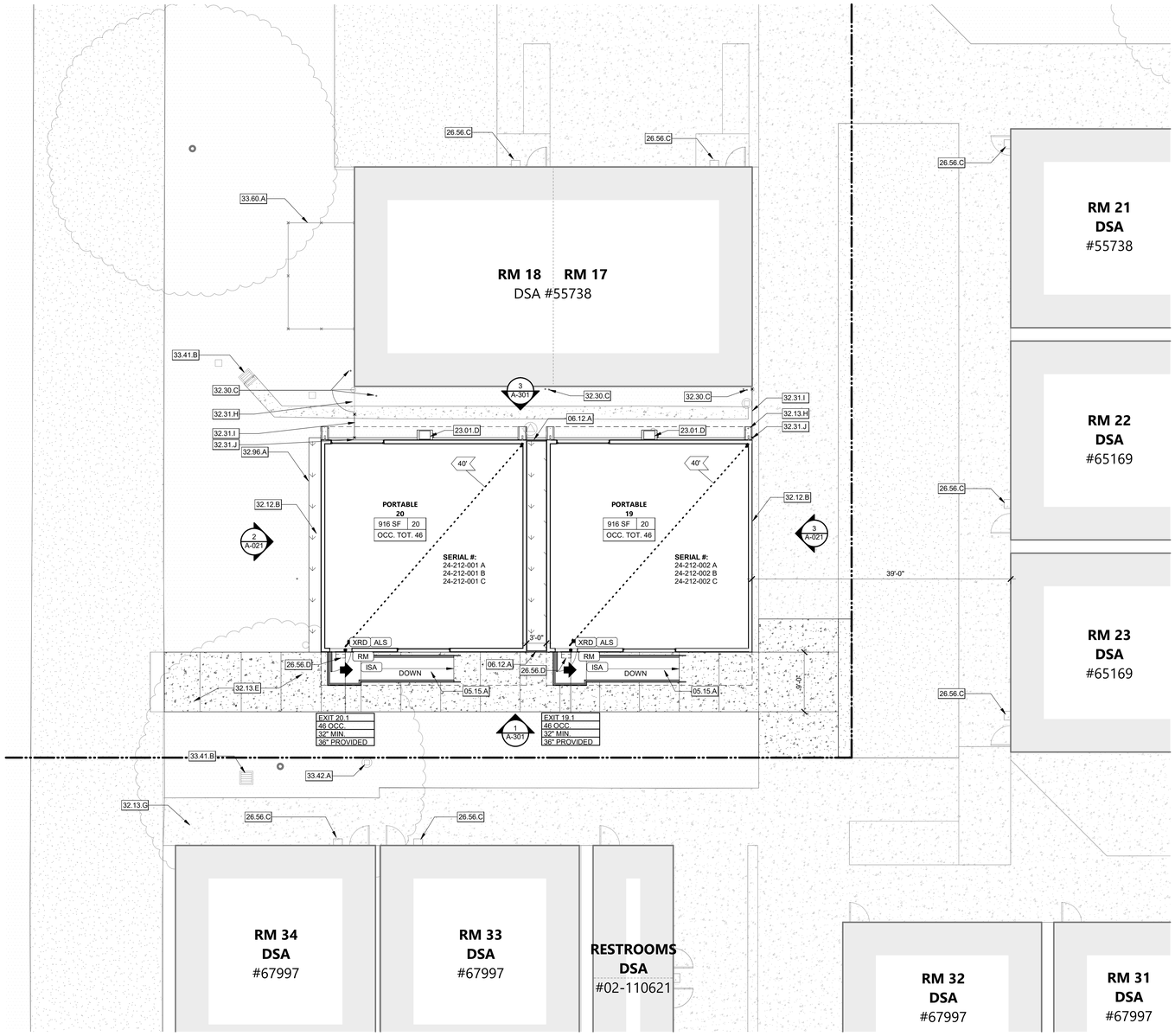

ENLARGED SITE PLAN 1/8" = 1'-0" 1

KEYNOTES

05.15.A	(N) RAMP. SEE PC DRAWINGS
06.12.A	(N) CFCI CLOSURE PANEL. PAINT TO MATCH BUILDING
23.01.D	(N) HVAC UNIT
26.56.C	(E) EXTERIOR LIGHT FIXTURE
26.56.D	(N) EXTERIOR LIGHT FIXTURE. SEE ELECTRICAL DRAWINGS
32.12.B	(N) AGREGATE BASE UNDER (N) PORTABLES. SCD
32.13.E	(N) CONCRETE FLATWORK. SCD
32.13.G	(E) CONCRETE PAVING
32.13.H	(N) SPLASH BLOCK. SCD
32.30.C	(E) POST OR BOLLARD
32.31.H	(N) 3'-6" WIDE SERVICE GATE. PER 11/A-111
32.31.I	(N) 7'-0" TALL CHAINLINK FENCE. PER 12/A-111
32.31.J	(N) FENCE POST. SEE A-021
32.96.A	PATCH AND REPAIR GRASS, LANDSCAPE, AND IRRIGATION SURROUNDING (N) PORTABLES
33.41.B	(E) DROP INLET
33.42.A	(E) SANITARTY SEWER CLEANOUT
33.60.A	(E) UTILITY ENCLOSURE

LEGEND - SITE PLAN

- ASSUMED PROPERTY LINE
- LIMITS OF WORK
- PROJECT BUILDING
- (N) CONCRETE PAVING
  - EXPANSION JOINT PER CIVIL DRAWINGS. SEE 1/C5.1
  - CONTROL JOINT PER CIVIL DRAWINGS. SEE 1/C5.1
- (E) ASPHALT
- (E) BUILDING
- (E) LANDSCAPING

PATH OF TRAVEL (P.O.T.)

- AS INDICATED, IS A COMMON BARRIER FREE ACCESS ROUTE
- IS AT LEAST 48" WIDE.
- NO ABRUPT VERTICAL CHANGES EXCEEDING 1/2" BEVELED AT 1:2 MAXIMUM SLOPE, EXCEPT THAT LEVEL CHANGES DO NOT EXCEED 1/4" VERTICAL.
- THE PATH SURFACE IS SLIP RESISTANT, STABLE, FIRM, AND SMOOTH.
- PASSING SPACES (11B-403.2) AT LEAST 60"x60" ARE LOCATED NOT MORE THAN 200' APART.
- PARTS OF P.O.T. WITH CONTINUOUS GRADIENTS HAVE 60" LEVEL AREAS (11B-403.7) NOT MORE THAN 400' APART.
- THE CROSS-SLOPE DOES NOT EXCEED 2% AND SLOPE IN THE DIRECTION OF TRAVEL IS LESS THAN 5% UNLESS OTHERWISE INDICATED.
- (POT) SHALL BE MAINTAINED FREE OF OVERHANGING OBSTRUCTIONS TO 80" MINIMUM (11B-307.4) AND PROTRUDING OBJECTS GREATER THAN 4" PROJECTION FROM WALL AND ABOVE 27" AND LESS THAN 80" (11B-307).
- ARCHITECT SHALL VERIFY PATH OF TRAVEL CONFORMS WITH THE ABOVE.

- (E) FENCE LINE
- FH — (E) FIRE HYDRANT
- FDC — (E) FIRE DEPT. CONNECTION
- (E) TREE
- RM — ROOM SIGNAGE. PER DETAILS 2/A-111
- ALS — ASSISTIVE LISTENING SYSTEMS. PER DETAIL 6/A-111
- ISA — INTERNATIONAL SIGN OF ACCESSIBILITY 7/A-111
- XRD — EXIT RAMP DOWN 10/A-111

OCCUPANT CHART PER 2022 CBC TABLE 1004.5

ROOM #	ROOM NAME	FUNCTION	N SF	SF/OCC.	OCC. #	OCCUPANCY TYPE	MAXIMUM OCCUPANT LOAD W/ 1 EXIT TABLE 1006.2.1	MIN. CLR. DOOR EXIT WIDTH	# EXITS REQUIRED	# EXITS PROVIDED
17	PORTABLE	EDUCATIONAL CLASSROOM AREA	955 SF	20 SF	48	E	49	2'-8"	1	
18	PORTABLE	EDUCATIONAL CLASSROOM AREA	957 SF	20 SF	48	E	49	2'-8"	1	
19	PORTABLE	EDUCATIONAL CLASSROOM AREA	916 SF	20 SF	46	E	49	2'-8"	1	
20	PORTABLE	EDUCATIONAL CLASSROOM AREA	916 SF	20 SF	46	E	49	2'-8"	1	
OCCUPANT TOTAL:					188					

BUILDING ANALYSIS

BUILDING	OCC. GROUP	CONST. TYPE	SPRINKLERS	HEIGHT	AREA (SF)	ROOF OVERHANG (SF)	TOTAL AREA (SF)	ALLOWABLE AREA 2022 CBC TABLE 506.2	ALLOWABLE HEIGHT
17	E	VB	NO	13	960	180			
18	E	VB	NO	13	960	180			
19	E	VB	NO	13	916	210			
20	E	VB	NO	13	916	210			
					3,752	780	4,435	9,500	40'

SITE PLAN GENERAL NOTES

1. SEE MECHANICAL, ELECTRICAL, AND CIVIL DRAWINGS FOR UTILITIES.

LEGEND - CODE ANALYSIS

OCCUPANCY TAG

ROOM NAME
101
150 SF | 15
OCC. TOT. 25

- ROOM NUMBER
- OCCUPANT LOAD FACTOR
- TOTAL OCCUPANCY CALCULATED
- ROOM AREA

EGRESS WIDTH TAG

EXIT 01
123 OCC.
38" MIN.
36" PROVIDED

- EXIT LOCATION
- TOTAL OCCUPANTS CALCULATED
- MINIMUM EXIT WIDTH CALCULATED
- EXIT WIDTH PROVIDED

0' — EGRESS DISTANCE

BUILDING ENTRANCE

AGENCY APPROVAL DSA# 02-122533
FILE NO. 39-24

IDENTIFICATION STAMP
DIV. OF THE STATE ARCHITECT
APP: 02-122533 INC:
REVIEWED FOR
SS ☑ FLS ☑ ACS ☑
DATE: 05/22/2024

196
1715 R STREET, SUITE 200
SACRAMENTO, CA 95811
TEL (916) 786-8178

CONSULTANTS

CIVIL ENGINEER
WARREN CONSULTING ENGINEERING, INC.
1117 Windfield Way, Suite 110
El Dorado Hills, CA 95762
TEL (916)-985-1870

PLUMBING ENGINEER
WESTON & ASSOCIATES MECHANICAL ENGINEERS, INC.
601 University Avenue, Suite 260
Sacramento, CA 95825
TEL (916)-482-0820

ELECTRICAL ENGINEER
THE ENGINEERING ENTERPRISE
1305 Marina Village Parkway
Alameda, CA 94501
TEL (530)-927-5793

BUILDING MANUFACTURER
AMERICAN MODULAR SYSTEMS
787 Spreckels Avenue
Manteca, CA 95336
TEL (209)-825-1921

PROFESSIONAL STAMP

LICENSED ARCHITECT
MARIANA ALVAREZ
C-36107
REN. 01-31-25
STATE OF CALIFORNIA

REVISIONS

NO.	DATE	DESCRIPTION

THE ARCHITECT DOES NOT REPRESENT THAT THESE PLANS OR THE SPECIFICATIONS ARE SUITABLE FOR ANY SITE OTHER THAN THE ONE FOR WHICH THEY WERE SPECIFICALLY PREPARED. THE ARCHITECT DISCLAIMS RESPONSIBILITY FOR THESE PLANS AND SPECIFICATIONS IF THEY ARE USED IN WHOLE OR IN PART AT ANY OTHER SITE. WRITTEN DIMENSIONS ON THESE DRAWINGS SHALL HAVE PRECEDENCE OVER SCALED DIMENSIONS.

PROJECT OWNER & TITLE

GALT JOINT UNION ELEMENTARY SCHOOL DISTRICT
1018 C Street, Suite 210
Galt, CA 95632

VERNON E. GREER ELEMENTARY SCHOOL RELOCATABLE BUILDINGS
248 West A Street
Galt, CA 95632

SHEET TITLE

ENLARGED SITE PLAN

DRAWN BY: BI JOB NUMBER: 23544.01

SHEET NO.

A-102

DATE: MAY 15, 2024

FILE LOCATION: Autodesk Docs://23544 Greer Portable Classrooms/23544.01_Greer ES New Relocatable Blgs_A24.rvt
DATE PLOTTED: 5/9/2024 1:24:20 PM

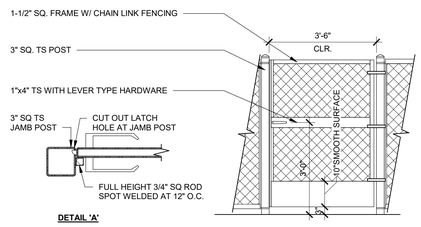

21.12.14 - 00000

CHAIN LINK SERVICE GATE | 1/2" = 1'-0" | 11

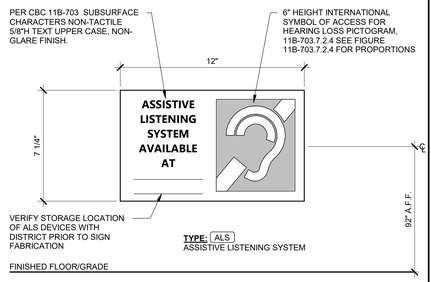

21.12.14 - 00000

SIGNAGE - ALS | 3" = 1'-0" | 6

1. PROVIDE SIGNS WHERE INDICATED ON PLANS.
2. RAISED CHARACTERS SHALL COMPLY WITH SECTION 11B-703.2 AND SHALL BE DUPLICATED IN BRAILLE.

   DEPTH: RAISED CHARACTERS SHALL BE 1/32INCH MINIMUM ABOVE THEIR BACKGROUND
   CASE: CHARACTERS SHALL BE UPPER CASE
   STYLE: CHARACTERS SHALL BE SANS SERIF
   PROPORTIONS: THE WIDTH OF LETTER "O" SHALL BE 60 PERCENT MINIMUM AND 110 PERCENT MAXIMUM OF THE HEIGHT OF LETTER "I"
   HEIGHT: 5/8 INCH MINIMUM AND 2 INCHES MAXIUM
3. BRAILLE SHALL BE CONTRACTED (GRADE 2) AND SHALL COMPLY WITH SECTION 11B-703.3.

   DIMENSIONS: BASE DOT DIAMTER 0.059 INCHES TO 0.063 INCHES
   SPACING IN EACH CELL AT 0.10 INCHES ON CENTER
   SPACING BETWEEN CELLS TO BE 0.30 INCHES
   DOT HEIGHT TO BE BETWEEN 0.025 INCHES TO 0.037 INCHES WITH DOMED TOPS
   POSITION: BRAILLE SHALL BE POSITIONED BELOW THE CORRESPONDING TEXT IN A HORIZONTAL FORMAT
4. CHARACTERS AND SYMBOLS SHALL BE LIGHT-ON-DARK OR DARK-ON-LIGHT CONTRAST BETWEEN CHARACTERS, SYMBOLS AND THEIR BACKGROUND.
5. FOR ALL SIGNS MOUNTED ON GLAZING COORDINATE OPPOSITE SIDE SIGN IN THE SAME LOCATION. WHERE NO SIGN IS SPECIFIED ON OPPOSITE SIDE, PROVIDE A BLANK SIGN TO MATCH PER (5 / A-111)

21.12.14 - 00000

SIGNAGE - GENERAL NOTES | 12" = 1'-0" | 1

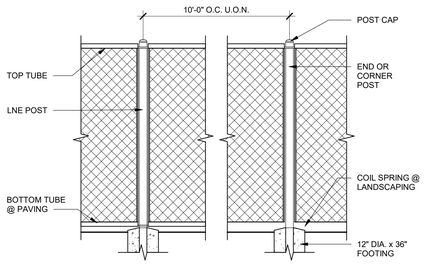

21.12.14 - 00000

TYPICAL CHAIN LINK FENCE | 1/2" = 1'-0" | 12

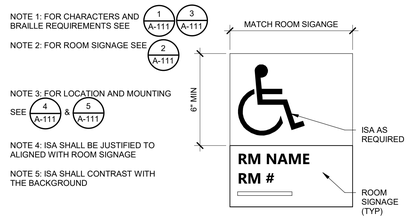

21.12.14 - 00000

ISA - SIGNAGE | 3" = 1'-0" | 7

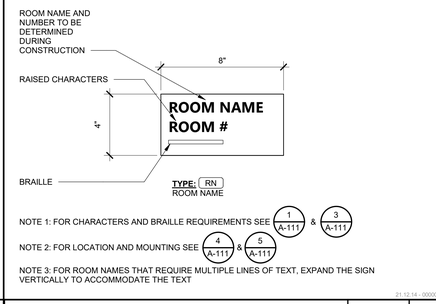

21.12.14 - 00000

SIGNAGE - ROOM IDENTIFICATION | 3" = 1'-0" | 2

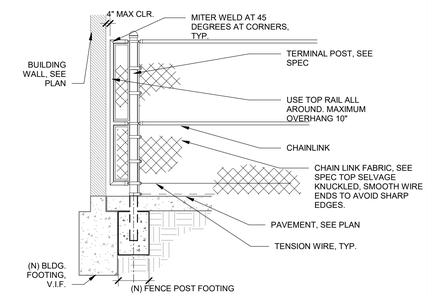

CHAINLINK FENCE POST @ BLDG WALL | 3/8" = 1'-0" | 13

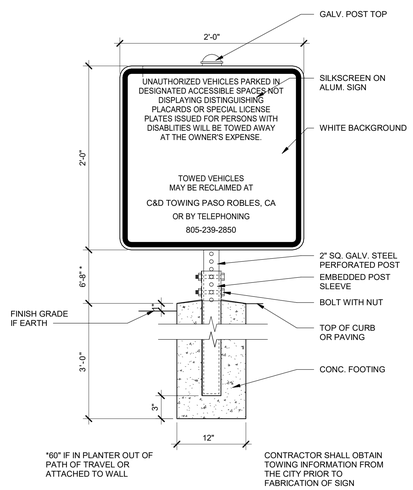

21.12.14 - 00000

PARKING LOT SIGNAGE | 1 1/2" = 1'-0" | 9

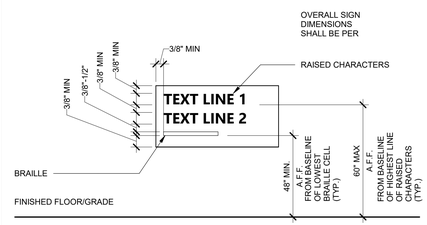

21.12.14 - 00000

SIGNAGE - CODE DIMENSIONS | 3" = 1'-0" | 3

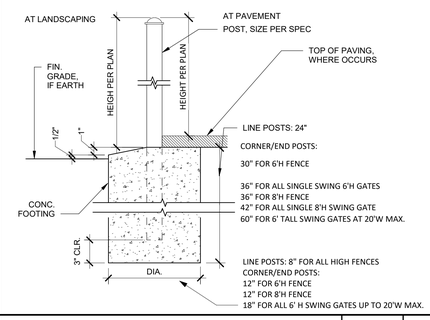

POST FOOTING | 1 1/2" = 1'-0" | 14

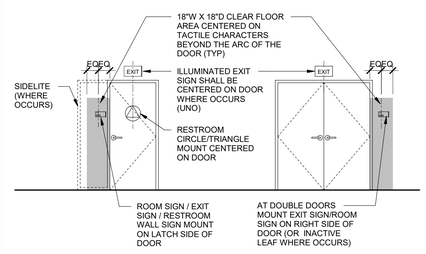

21.12.14 - 00000

SIGNAGE - MOUNTING LOCATIONS | 1/4" = 1'-0" | 4

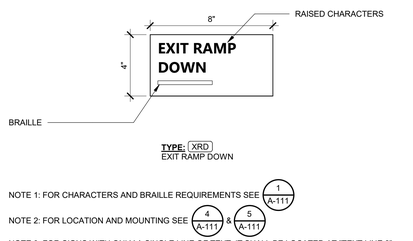

21.12.14 - 00000

SIGNAGE - EXIT RAMP DOWN | 3" = 1'-0" | 10

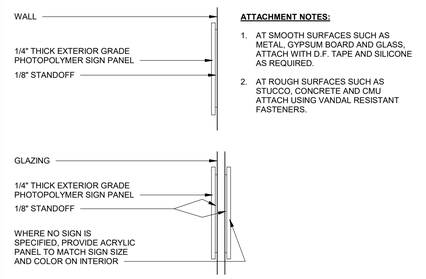

ATTACHMENT NOTES:

1. AT SMOOTH SURFACES SUCH AS METAL, GYPSUM BOARD AND GLASS, ATTACH WITH D.F. TAPE AND SILICONE AS REQUIRED.
2. AT ROUGH SURFACES SUCH AS STUCCO, CONCRETE AND CMU ATTACH USING VANDAL RESISTANT FASTENERS.

21.12.14 - 00000

SIGNAGE - MOUNTING | 3" = 1'-0" | 5

AGENCY APPROVAL DSA# 02-122533
FILE NO. 39-24

IDENTIFICATION STAMP
DIV. OF THE STATE ARCHITECT
APP: 02-122533 INC:
REVIEWED FOR
SS ☑ FLS ☑ ACS ☑
DATE: 05/22/2024

196

1715 R STREET, SUITE 200
SACRAMENTO, CA 95811
TEL (916) 786-8178

CONSULTANTS

CIVIL ENGINEER
WARREN CONSULTING ENGINEERING, INC.
1117 Windfield Way, Suite 110
El Dorado Hills, CA 95762
TEL (916)-985-1870

PLUMBING ENGINEER
WESTON & ASSOCIATES MECHANICAL ENGINEERS, INC.
601 University Avenue, Suite 260
Sacramento, CA 95825
TEL (916)-482-0820

ELECTRICAL ENGINEER
THE ENGINEERING ENTERPRISE
1305 Marina Village Parkway
Alameda, CA 94501
TEL (530)-927-5793

BUILDING MANUFACTURER
AMERICAN MODULAR SYSTEMS
787 Spreckels Avenue
Manteca, CA 95336
TEL (209)-825-1921

PROFESSIONAL STAMP

LICENSED ARCHITECT
MARINA ALVAREZ PAGE
C-36107
REN. 01-31-25
STATE OF CALIFORNIA

REVISIONS

NO.	DATE	DESCRIPTION

THE ARCHITECT DOES NOT REPRESENT THAT THESE PLANS OR THE SPECIFICATIONS ARE SUITABLE FOR ANY SITE OTHER THAN THE ONE FOR WHICH THEY WERE SPECIFICALLY PREPARED. THE ARCHITECT DISCLAIMS RESPONSIBILITY FOR THESE PLANS AND SPECIFICATIONS IF THEY ARE USED IN WHOLE OR IN PART AT ANY OTHER SITE. WRITTEN DIMENSIONS ON THESE DRAWINGS SHALL HAVE PRECEDENCE OVER SCALED DIMENSIONS.

PROJECT OWNER & TITLE

GALT JOINT UNION ELEMENTARY SCHOOL DISTRICT
1018 C Street, Suite 210
Galt, CA 95632

VERNON E. GREER ELEMENTARY SCHOOL RELOCATABLE BUILDINGS
248 West A Street
Galt, CA 95632

SHEET TITLE

DETAILS

DRAWN BY: PA / QP / BI JOB NUMBER: 23544.01

SHEET NO.

A-111

DATE: MAY 15, 2024

DATE PLOTTED: 5/9/2024 1:24:23 PM FILE LOCATION: Autodesk Docs://23544 Greer Portable Classrooms/23544.01_Greer ES New Relocatable Blgs_A24.rvt

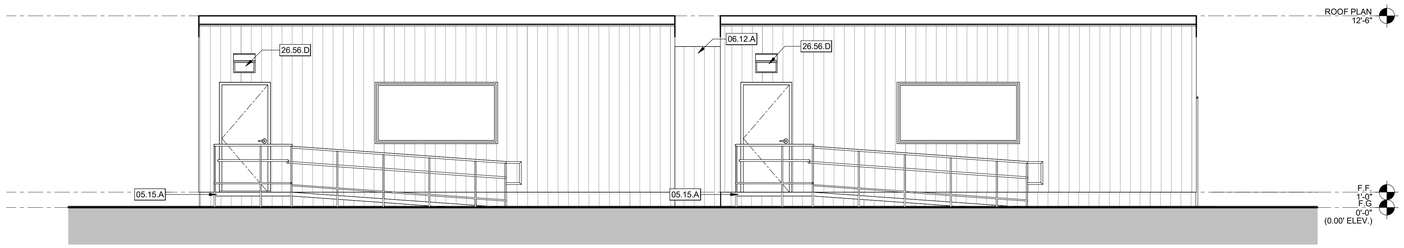

SOUTH ELEVATION 1/4" = 1'-0" **1**

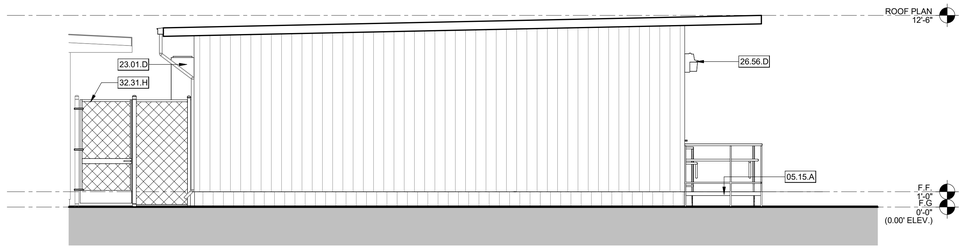

WEST ELEVATION 1/4" = 1'-0" **2**

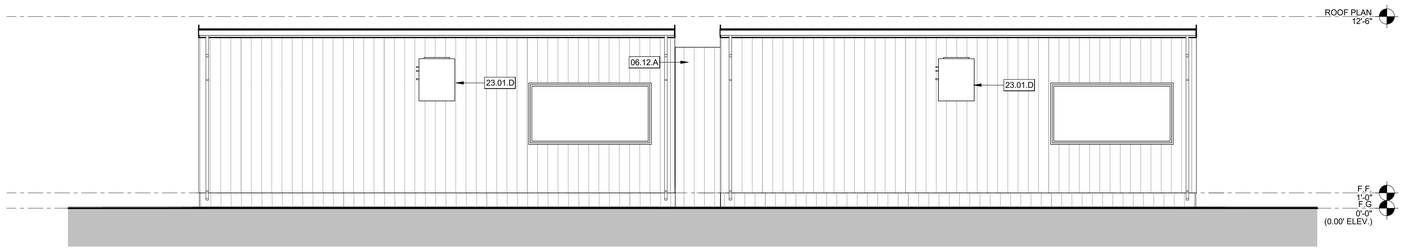

NORTH ELEVATION 1/4" = 1'-0" **3**

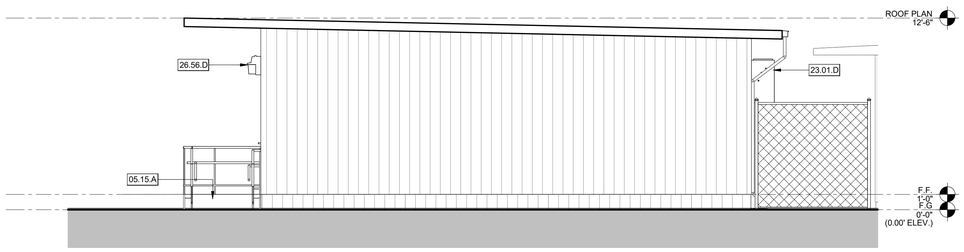

EAST ELEVATION 1/4" = 1'-0" **4**

KEYNOTES

05.15.A	(N) RAMP. SEE PC DRAWINGS
06.12.A	(N) CFCI CLOSURE PANEL. PAINT TO MATCH BUILDING
23.01.D	(N) HVAC UNIT
26.56.D	(N) EXTERIOR LIGHT FIXTURE. SEE ELECTRICAL DRAWINGS
32.31.H	(N) 3'-6" WIDE SERVICE GATE. PER 11/A-111

AGENCY APPROVAL DSA# 02-122533
FILE NO. 39-24

IDENTIFICATION STAMP
DIV. OF THE STATE ARCHITECT
APP: 02-122533 INC:
REVIEWED FOR
SS ☑ FLS ☑ ACS ☑
DATE: 05/22/2024

196

1715 R STREET, SUITE 200
SACRAMENTO, CA 95811
TEL (916) 786-8178

CONSULTANTS

CIVIL ENGINEER
WARREN CONSULTING ENGINEERING, INC.
1117 Windfield Way, Suite 110
El Dorado Hills, CA 95762
TEL (916)-985-1870

PLUMBING ENGINEER
WESTON & ASSOCIATES MECHANICAL ENGINEERS, INC.
601 University Avenue, Suite 260
Sacramento, CA 95825
TEL (916)-482-0820

ELECTRICAL ENGINEER
THE ENGINEERING ENTERPRISE
1305 Marina Village Parkway
Alameda, CA 94501
TEL (530)-927-5793

BUILDING MANUFACTURER
AMERICAN MODULAR SYSTEMS
787 Spreckels Avenue
Manteca, CA 95336
TEL (209)-825-1921

PROFESSIONAL STAMP

LICENSED ARCHITECT
MARIANA ALVAREZ
C-36107
REN. 01-31-25
STATE OF CALIFORNIA

REVISIONS

NO.	DATE	DESCRIPTION

THE ARCHITECT DOES NOT REPRESENT THAT THESE PLANS OR THE SPECIFICATIONS ARE SUITABLE FOR ANY SITE OTHER THAN THE ONE FOR WHICH THEY WERE SPECIFICALLY PREPARED. THE ARCHITECT DISCLAIMS RESPONSIBILITY FOR THESE PLANS AND SPECIFICATIONS IF THEY ARE USED IN WHOLE OR IN PART AT ANY OTHER SITE. WRITTEN DIMENSIONS ON THESE DRAWINGS SHALL HAVE PRECEDENCE OVER SCALED DIMENSIONS.

PROJECT OWNER & TITLE
GALT JOINT UNION ELEMENTARY SCHOOL DISTRICT
1018 C Street, Suite 210
Galt, CA 95632

VERNON E. GREER ELEMENTARY SCHOOL RELOCATABLE BUILDINGS
248 West A Street
Galt, CA 95632

SHEET TITLE
EXTERIOR ELEVATIONS

DRAWN BY: BI JOB NUMBER: 23544.01

SHEET NO.
A-301

DATE: MAY 15, 2024

DATE PLOTTED: 5/9/2024 1:24:24 PM FILE LOCATION: Autodesk Docs://23544 Greer Portable Classrooms/23544.01_Greer ES New Relocatable Blgs_A24.rvt

SYMBOLS LIST

SOME OF THESE SYMBOLS SHOWN MAY NOT BE USED ON THIS PROJECT

POWER DISTRIBUTION

- SWITCHGEAR, SWITCHBOARD, DISTRIBUTION BOARD, SUBSTATION OR MOTOR CONTROL CENTER, FLOOR MOUNTED ON CONCRETE HOUSEKEEPING PAD WHERE INDICATED ON DRAWINGS. DOUBLE LINE INDICATES FRONT FACE OF GEAR.
- DISTRIBUTION BOARD, SURFACE MOUNTED ON WALL.
- PANELBOARD, 277/480V, SURFACE MOUNTED ON WALL.
- PANELBOARD, 277/480V, FLUSH MOUNTED IN WALL.
- PANELBOARD, 120/208V, SURFACE MOUNTED ON WALL.
- PANELBOARD, 120/208V, FLUSH MOUNTED IN WALL.
- DRY-TYPE STEP-DOWN TRANSFORMER, FLOOR MOUNTED 480-120/208V 3Ø, UON. DOUBLE LINE INDICATES FRONT FACE OF TRANSFORMER.
- ELECTRIC MOTOR, NIEC. MAKE POWER CONNECTIONS ONLY AS NOTED ON PLANS.
- F — EXHAUST FAN MOTOR, SINGLE PHASE, NIEC. MAKE POWER CONNECTIONS TO INCLUDE JUNCTION BOX MOUNTED, FRACTIONAL HORSEPOWER MANUAL MOTOR STARTER WITH INTEGRAL DISCONNECT ADJACENT TO FAN WITH 2 #12 CONDUCTORS PLUS GROUND IN 1/2" FLEXIBLE CONDUIT BETWEEN STARTER AND MOTOR.
- V — INDOOR FAN POWERED VAV BOX MOTOR, SINGLE PHASE, NIEC. MAKE POWER CONNECTIONS TO INCLUDE JUNCTION BOX MOUNTED, FRACTIONAL HORSEPOWER MANUAL MOTOR STARTER WITH INTEGRAL DISCONNECT ADJACENT TO VAV BOX WITH 2 # 12 CONDUCTORS PLUS GROUND IN 1/2" FLEXIBLE CONDUIT BETWEEN STARTER AND MOTOR.
- D 2 — MOTOR OPERATED FIRE/SMOKE DAMPER 'FSD', NIEC. SYMBOL DENOTES INTERFACE FOR POWER CONNECTIONS WITH LOCAL DISCONNECT MEANS. ADJACENT NUMBER INDICATES QUANTITY OF ACTUATORS PER FSD, EACH REQUIRING A POWER CONNECTION, IF MORE THAN 1. FOR FIRE ALARM REQUIREMENTS AT FSD, REFER TO FIRE ALARM SYMBOLS.
- COMBINATION EXHAUST FAN AND DOWNLIGHT, CEILING MOUNTED. FAN AND LIGHT SHALL BE CONTROLLED SEPARATELY.
- P — PULLBOX OR HANDHOLE, SIZE AND TYPE AS NOTED ON PLANS.
- A / AF — SAFETY DISCONNECT SWITCH, 3 POLE, UON. ADJACENT NUMBER INDICATES FUSE SIZE WHEN APPLICABLE. LABELING CONVENTION AS FOLLOWS:

A: 30A, NON-FUSED	AF: 30A, FUSED
B: 60A, NON-FUSED	BF: 60A, FUSED
C: 100A, NON-FUSED	CF: 100A, FUSED
D: 200A, NON-FUSED	DF: 200A, FUSED
E: 400A, NON-FUSED	EF: 400A, FUSED
F: 600A, NON-FUSED	FF: 600A, FUSED
G: 800A, NON-FUSED	GF: 800A, FUSED

- MAGNETIC MOTOR STARTER WITH INTEGRAL OVERCURRENT PROTECTION. ADJACENT NUMBER INDICATES NEMA SIZE OF STARTER. "HANDLE" DENOTES INTEGRAL DISCONNECT.
- VFD — VARIABLE FREQUENCY DRIVE FURNISHED UNDER ANOTHER DIVISION. INSTALL VFD AND PROVIDE POWER SERVICE CONNECTION UNDER THIS DIVISION. "HANDLE" DENOTES INTEGRAL DISCONNECT.
- ECM — ELECTRONICALLY COMMUTATED MOTOR CONTROLLER FURNISHED UNDER ANOTHER DIVISION. INSTALL ECM AND PROVIDE POWER SERVICE CONNECTION UNDER THIS DIVISION. "HANDLE" DENOTES INTEGRAL DISCONNECT.
- PACKAGE MOTOR CONTROLLER OR STARTER FURNISHED AND INSTALLED UNDER ANOTHER DIVISION WITH EQUIPMENT CONTROLLED. PROVIDE SINGLE-POINT POWER SERVICE CONNECTION UNDER THIS DIVISION AS NOTED ON PLANS.
- DRIVEN GROUND ROD.
- DRIVEN GROUND ROD IN GROUND WELL WITH COVER.
- ELECTRICAL VEHICLE CHARGING STATION, WALL MOUNTED.
- ELECTRICAL VEHICLE CHARGING STATION, PEDESTAL MOUNTED.
- CABLE TO BUS TERMINATION LUGS.
- BOLTED PRESSURE OR HIGH PRESSURE CONTACT OR FUSED SWITCHES.
- GROUP MOUNTED MOLDED CASE CIRCUIT BREAKER.
- INDIVIDUALLY FIXED MOUNTED INSULATED-CASE OR POWER CIRCUIT BREAKER.
- INDIVIDUALLY DRAW-OUT MOUNTED INSULATED-CASE OR POWER CIRCUIT BREAKER.
- 52 — MEDIUM-VOLTAGE, INDIVIDUALLY DRAW-OUT MOUNTED VACUUM CIRCUIT BREAKER.
- MEDIUM-VOLTAGE LOAD INTERRUPTER SWITCH, FUSED TYPE.
- MEDIUM-VOLTAGE LOAD INTERRUPTER SWITCH, NON-FUSED TYPE.
- G — GROUND FAULT RELAY INTEGRAL WITH CIRCUIT BREAKER.
- EO — ELECTRICALLY OPERATED CIRCUIT BREAKER, INTEGRAL.
- ST — SHUNT-TRIP INTEGRAL WITH OVERCURRENT PROTECTION DEVICES.
- K 1 — KIRK-KEY INTERLOCK INTEGRAL WITH OVERCURRENT PROTECTION DEVICES. ADJACENT NUMBER CORRESPONDS WITH DEVICE INTERLOCK.
- M — PRIVATE METER, MOUNTED INTEGRAL WITH OVERCURRENT PROTECTION OR SEPARATE WITHIN SWITCHGEAR.
- M — UTILITY METER, MOUNTED IN UTILITY METER SECTION OF SWITCHGEAR OR SWITCHBOARDS.
- M — PRIVATE METER, MOUNTED IN SEPARATE ENCLOSURE FROM SWITCHGEAR OR SWITCHBOARDS.
- GFR — GROUND FAULT RELAY WITH SHUNT TRIP.
- GFA — GROUND FAULT ALARM, NO SHUNT TRIP.
- TRANSFORMER.
- CONNECTION TO GROUND.
- CURRENT TRANSFORMERS.
- POTENTIAL TRANSFORMERS.
- AUTOMATIC OR MANUAL TRANSFER SWITCH.
- AUTOMATIC TRANSFER & BY-PASS ISOLATION SWITCH.
- G — EMERGENCY GENERATOR.
- BATTERIES.
- NEUTRAL SERVICE DISCONNECT LINK.
- SPD — SURGE PROTECTION DEVICE, 'SPD'.
- C — CONTROL CONTACTOR.
- NORMALLY OPEN CONTACT.
- NORMALLY CLOSED CONTACT.
- DMU — DIGITAL METERING UNIT.
- GND — GROUND BUS AS SHOWN ON SINGLE LINE DIAGRAMS.
- GROUND BUS AS SHOWN ON PLAN VIEWS.
- NEU — NEUTRAL BUS.
- V — CONCRETE VAULT, IN-GRADE, FOR EXTERIOR APPLICATIONS. SIZE AND TYPE AS NOTED ON THE PLANS.
- M — CONCRETE MANHOLE, IN-GRADE, FOR EXTERIOR APPLICATIONS. SIZE AND TYPE AS NOTED ON THE PLANS.

LINESTYLES

- EXISTING TO REMAIN
- EXISTING TO BE REMOVED (R) OR RELOCATED (RR)
- NEW CONSTRUCTION
- FUTURE CONSTRUCTION

WIRING DEVICES

- JUNCTION BOX, WALL MOUNTED, +18" UON.
- JUNCTION BOX, MOUNTED IN FLUSH FLOOR BOX.
- J — JUNCTION BOX, MOUNTED FLUSH IN CEILING.
- JUNCTION BOX, SURFACE OR PENDANT MOUNTED TO BOTTOM OF STRUCTURE IN ACCESSIBLE CEILING SPACE OR EXPOSED IN OPEN CEILING AREAS.
- JUNCTION BOX, MOUNTED ON CONDUIT STANCHION FLOOR PENETRATION, +12" UON.
- SINGLE-PLEX CONVENIENCE RECEPTACLE DEVICE, WALL MOUNTED, +18" UON.
- DUPLEX CONVENIENCE RECEPTACLE DEVICE, WALL MOUNTED, +18" UON. LETTERING ADJACENT TO THE DEVICE ON THE PLANS INDICATE THE FOLLOWING FOR THOSE RECEPTACLES.
  - A: ARC FAULT CURRENT INTERRUPTER (AFCI)
  - G: GROUND FAULT CURRENT INTERRUPTER (GFCI)
  - IG: ISOLATED GROUND
  - TR: TAMPER RESISTANT
  - U: INTEGRAL USB PORTS
  - WP: WEATHER-RESISTANT, GROUND FAULT CURRENT INTERRUPTER (GFCI) WITH WEATHERPROOF "IN USE" COVER
- DOUBLE DUPLEX CONVENIENCE RECEPTACLE DEVICE, WALL MOUNTED, +18" UON.
- DUPLEX CONVENIENCE RECEPTACLE DEVICE, WALL MOUNTED OVER COUNTER, 6" ABOVE BACK SPLASH UON, BUT NO HIGHER THAN ADA REQUIREMENTS.
- DUPLEX CONVENIENCE RECEPTACLE DEVICE, SPLIT-WIRED, WALL MOUNTED, +18" UON.
- DUPLEX CONVENIENCE RECEPTACLE DEVICE, ON BACK-UP POWER SYSTEM, WALL MOUNTED, +18" UON.
- DUPLEX, OR DOUBLE DUPLEX, CONVENIENCE RECEPTACLE DEVICE, CONTROLLED PER T24, WALL MOUNTED, +18" UON.
- DUPLEX CONVENIENCE RECEPTACLE DEVICE, HORIZONTALLY WALL MOUNTED, +18" UON.
- SPECIALTY OUTLET DEVICE, NEMA CONFIGURATION TYPE AS NOTED ON PLANS, WALL MOUNTED, +18" UON.
- DUPLEX CONVENIENCE RECEPTACLE DEVICE, MOUNTED IN FLUSH FLOOR BOX.
- DOUBLE DUPLEX CONVENIENCE RECEPTACLE DEVICE, MOUNTED IN FLUSH FLOOR BOX.
- COMBINATION POWER/TELECOMMUNICATION DEVICE, MOUNTED IN FLUSH FLOOR BOX. TYPE AS NOTED ON PLANS OR IN SPECIFICATIONS.
- DUPLEX CONVENIENCE RECEPTACLE DEVICE, MOUNTED IN FIRE-RATED POKE-THRU FLOOR FITTING.
- DOUBLE DUPLEX CONVENIENCE RECEPTACLE DEVICE, MOUNTED IN FIRE-RATED POKE-THRU FLOOR FITTING.
- COMBINATION POWER/TELECOMMUNICATION DEVICE, MOUNTED IN FIRE-RATED POKE-THRU FLOOR FITTING. TYPE AS NOTED ON PLANS OR IN SPECIFICATIONS.
- DUPLEX CONVENIENCE RECEPTACLE DEVICE, MOUNTED FLUSH IN CEILING.
- DOUBLE DUPLEX CONVENIENCE RECEPTACLE DEVICE, MOUNTED FLUSH IN CEILING.
- DUPLEX CONVENIENCE RECEPTACLE DEVICE, MOUNTED ON CONDUIT STANCHION FLOOR PENETRATION, +12" UON.
- DUPLEX CONVENIENCE RECEPTACLE DEVICE, CORD OR REEL HUNG FROM STRUCTURE ABOVE. TYPE AS NOTED ON PLANS.
- ELECTRIFIED FURNITURE PARTITION POWER FEED, WALL MOUNTED, +18" UON. CONSISTS OF 4 11/16" SQ. X 2 1/8" DEEP JUNCTION BOX, SINGLE GANG RING, AND STAINLESS STEEL COVER PLATE WITH KO TO ACCEPT FURNITURE WHIP.
- ELECTRIFIED FURNITURE PARTITION COMBINATION POWER/TELECOMMUNICATION FEEDS, MOUNTED IN FIRE-RATED POKE-THRU FLOOR FITTING WITH KO'S OR THREADED HUB IN COVER TO ACCEPT FURNITURE WHIPS
- ELECTRIFIED FURNITURE PARTITION POWER FEED, MOUNTED IN FIRE-RATED POKE-THRU FLOOR FITTING WITH KO OR THREADED HUB IN COVER TO ACCEPT FURNITURE WHIP.
- POWER/TELECOMMUNICATION POLE, MOUNTED TO EXTEND FROM FLOOR TO CEILING. TYPE AS NOTED ON PLANS.
- S^T — SINGLE-POLE, MANUAL DISCONNECT SWITCH WITH THERMAL OVERLOAD ELEMENT, MOUNTED ADJACENT TO MOTOR.
- S^{MS} — SINGLE-POLE, FRACTIONAL HORESPOWER MOTOR STARTER/DISCONNECT SWITCH, MOUNTED ADJACENT TO MOTOR.
- S^F — SWITCH FURNISHED UNDER ANOTHER DIVISION, BUT INSTALLED AND WIRED UNDER THIS DIVISION, WALL MOUNTED, +42" UON.
- T — LINE-VOLTAGE THERMOSTAT, NIEC, WALL MOUNTED +48" UON. INSTALLED AND WIRED BY ELECTRICAL.
- CONTROL STATION, WALL MOUNTED, +42" UON.

CONVENTIONS

- 1 — NUMBERED NOTE, APPLIES TO ALL DRAWINGS.
- 1 — NUMBERED SHEET NOTE, APPLIES TO DRAWING CONTAINING NOTES ONLY.
- 1 — OVERCURRENT PROTECTIVE DEVICE NUMBER IDENTIFICATION TAG. REFERS TO LOCATION OF PROTECTIVE OR CONTROL DEVICE WITHIN SWITCHBOARDS, DISTRIBUTION BOARDS, MOTOR CONTROL CENTERS, ETC.
- EQ ## — EQUIPMENT IDENTIFICATION TAG: ITEM FURNISHED AND INSTALLED UNDER ANOTHER DIVISION AND WIRED UNDER THIS DIVISION.
- 2004 — FEEDER TAG. REFER TO FEEDER SCHEDULE.
- 1 / E-801 — DETAIL REFERENCE:
  - DETAIL DESIGNATION
  - SHEET NUMBER

SECURITY

- A — ALARM MONITORING CONTACT, MOUNTED AS NOTED ON PLANS.
- M — AREA MOTION SENSOR, CEILING MOUNTED, UON.
- M — AREA MOTION SENSOR, WALL MOUNTED, +84" UON.
- GB — GLASS BREAK DETECTOR, CEILING MOUNTED, UON.
- CR — CARD READER CONTROLLER, WALL MOUNTED, +42" UON.
- K — KEY PAD CONTROLLER, WALL MOUNTED, +42" UON.
- PS — REMOTE MOUNTED POWER SUPPLY FOR LOW-VOLTAGE EQUIPMENT CONNECTIONS.
- 90 / 180 / 270 / 360 — 90, 180, 270, 360 DEGREE CCTV CAMERA, CEILING OR PENDANT MOUNTED AS NOTED ON PLANS.
- PAN/TILT/ZOOM (PTZ) CCTV CAMERA, CEILING MOUNTED.
- 90 / 180 / 270 / 360 — 90, 180, 270, 360 DEGREE CCTV CAMERA, WALL MOUNTED.

TELECOMMUNICATIONS

- TELECOMMUNICATION DEVICE, WALL MOUNTED, +18" UON.
- TELECOMMUNICATION DEVICE, WALL MOUNTED, 6" ABOVE BACK SPLASH UON, BUT NO HIGHER THAN ADA REQUIREMENTS.
- W — TELEPHONE DEVICE, WALL MOUNTED, +42" UON.
- WAP — WIRELESS ACCESS POINT, WALL MOUNTED, 8" BELOW FINISHED CEILING, UON.
- WAP — WIRELESS ACCESS POINT, CEILING MOUNTED.
- #D/#V — QUANTITY OF DATA AND/OR VOICE TELECOMMUNICATIONS DEVICES.
- EL — TELECOMMUNICATION DEVICE, WALL MOUNTED, +18" UON, FOR ELEVATOR USE IN ELEVATOR MACHINE/CONTROLLER ROOM.
- EM — TELECOMMUNICATION DEVICE, FOR EMERGENCY PHONES, MOUNTED AS NOTED ON PLANS.

LIGHTING

- LUMINAIRE, RECESSED IN CEILING.
- LUMINAIRE, SURFACE MOUNTED.
- SUSPENDED LINEAR LUMINAIRE. SUSPENSION POINTS ARE GRAPHIC ONLY AND DO NOT REPRESENT ACTUAL LOCATION OR QUANTITY.
- LUMINAIRE, WALL MOUNTED.
- STRIP LUMINAIRE, SURFACE OR PENDANT MOUNTED.
- STRIP LUMINAIRE, SURFACE MOUNTED IN ARCHITECTURAL CEILING COVE.
- STRIP LUMINAIRE, SURFACE MOUNTED VERTICALLY ON WALL OR IN COVE.
- ROUND DOWNLIGHT LUMINAIRE, RECESSED IN CEILING.
- SQUARE DOWNLIGHT LUMINAIRE, RECESSED IN CEILING.
- DOWNLIGHT/INDUSTRIAL LUMINAIRE, SURFACE OR PENDANT MOUNTED.
- DIRECTIONAL LUMINAIRE, RECESSED IN CEILING.
- DIRECTIONAL LUMINAIRE, SURFACE OR PENDANT MOUNTED.
- LINEAR, MULTI-HEAD, ADJUSTABLE ACCENT LUMINAIRES, RECESSED IN CEILING.
- LINEAR WALLWASH LUMINAIRE, RECESSED IN CEILING.
- LINEAR WALLWASH LUMINAIRE, SURFACE OR PENDANT MOUNTED.
- SCONCE LUMINAIRE, WALL MOUNTED.
- LED TAPE STRIP TYPE LUMINAIRE, MOUNTED LOOSE OR IN CHANNEL.
- DECORATIVE LUMINAIRE, PENDANT MOUNTED.
- J X — LINEAR TRACK SYSTEM WITH PLUG-IN ADJUSTABLE LUMINAIRE HEADS. TRACK SHALL BE EITHER RECESSED, SURFACE OR PENDANT MOUNTED TO CEILING AS NOTED IN LUMINAIRE SCHEDULE. 'X' NEXT TO JUNCTION BOX REPRESENTS INTEGRAL CURRENT LIMITER TRIP RATING.
- EXIT SIGN LUMINAIRE, CEILING OR WALL MOUNTED WITH DIRECTIONAL ARROWS AS NOTED ON PLANS. WORD 'EXIT' TO BE LOCATED IN SHADED FACE(S).
- COMBO EXIT SIGN AND EGRESS LUMINAIRE, CEILING OR WALL MOUNTED WITH ARROWS AS NOTED ON PLANS OR IN LUMINAIRE SCHEDULE.
- EMERGENCY SELF-POWERED BATTERY PACK WITH LUMINAIRE HEADS AS NOTED ON PLANS OR IN LUMINAIRE SCHEDULE.
- SHADING OF ANY LUMINAIRE INDICATES CRITICAL/STANDBY LIGHTING.
- HALF SHADING OF ANY LUMINAIRE INDICATES EMERGENCY/EGRESS LIGHTING.
- SINGLE-HEAD AREA LUMINAIRE WITH BRACKET ARM AND POLE, MOUNTED TO CONCRETE BASE.
- TWO-HEAD AREA LUMINAIRE WITH BRACKET ARMS AND POLE, MOUNTED TO CONCRETE BASE.
- SINGLE-HEAD AREA POST-TOP LUMINAIRE WITH POLE, MOUNTED TO CONCRETE BASE.
- AREA LUMINAIRE, SURFACE OR RECESSED MOUNTED TO WALL.
- LUMINAIRE BOLLARD, MOUNTED TO CONCRETE BASE.
- GROUNDWELL LUMINAIRE MOUNTED FLUSH IN FINISHED GRADE.
- FLOODLIGHT LUMINAIRE, STANCHION MOUNTED ABOVE GRADE.
- LINEAR SIGN-LIGHT LUMINAIRE, STANCHION MOUNTED ABOVE GRADE.
- STEPLIGHT LUMINAIRE, WALL MOUNTED.
- MULTIPLE LUMINAIRES MOUNTED ON COMMON POLE.
- F.A.A OBSTRUCTION LUMINAIRE.

LINE VOLTAGE LIGHTING CONTROL

- S — SINGLE-POLE, SINGLE-THROW SWITCH, WALL MOUNTED, +42" UON.
- S^3 — THREE-WAY SWITCH, WALL MOUNTED, +42" UON.
- S^4 — FOUR-WAY SWITCH, WALL MOUNTED, +42" UON.
- S^K — SINGLE-POLE, SINGLE-THROW SWITCH, KEY-OPERATED, WALL MOUNTED, +42" UON.
- S^P — SINGLE-POLE, SINGLE-THROW SWITCH, WITH PILOT LIGHT, WALL MOUNTED, +42" UON.
- S^D — WALLBOX DIMMER SWITCH, +42" UON. SIZED PER CONNECTED LOAD ON PLANS AND FURNISHED FOR LAMP SOURCE SERVED. PROVIDED FOR DERATING WHEN INSTALLED GANGED LOCATIONS.
- S^{TC} — SINGLE-POLE, TIMER CONTROLLED SWITCH, WALL MOUNTED, +42" UON.
- S^{EP} — SINGLE-POLE, SINGLE-THROW SWITCH, EXPLOSION PROOF, WALL MOUNTED, +42" UON.
- S^V — LINE VOLTAGE SINGLE RELAY VACANCY SENSOR, WALL MOUNTED, +42" UON.
- S^{WP} — SINGLE-POLE, SINGLE-THROW SWITCH WITH WEATHERPROOF COVER, WALL MOUNTED, +42" UON.
- S^H — SINGLE-POLE SWITCH WITH AUTOMATIC HUMIDITY CONTROL, WALL MOUNTED, +42" UON.
- S^M — DUAL LEVEL OCCUPANCY SENSOR SWITCH, WALL MOUNTED, +42" UON.
- S^{M1} — SINGLE LEVEL OCCUPANCY SENSOR SWITCH, WALL MOUNTED, +42" UON.
- S^{DM} — COMBINATION OCCUPANCY SENSOR AND DIMMER SWITCH, WALL MOUNTED, +42" UON.
- OS — OCCUPANCY SENSOR FOR AREA COVERAGE, CEILING MOUNTED.
- PC — PHOTOELECTRIC CELL SENSOR, CEILING MOUNTED.
- ETD — EGRESS LIGHTING TRANSFER DEVICE.
- 924 — BYPASS DEVICE FOR CONTROLLED EMERGENCY LIGHTING.

RACEWAYS

- CONDUIT RUN EXPOSED ON WALL OR CEILING.
- CONDUIT RUN CONCEALED IN SLAB, UNDER SLAB OR UNDERGROUND.
- CONDUIT RUN CONCEALED IN WALL OR ABOVE CEILING.
- CONDUIT HOMERUN, CONTINUOUS RUN TO PANEL OR EQUIPMENT CABINET. HOMERUN CAN OCCUR ON ANY OF THE ABOVE ROUTING CONDITIONS.
- CONDUIT TURNED UP, CAN OCCUR ON ANY OF THE ABOVE ROUTING CONDITIONS.
- CONDUIT TURNED DOWN, CAN OCCUR ON ANY OF THE ABOVE ROUTING CONDITIONS.
- CONDUIT CAPPED OR STUBBED WITH INSULATED BUSHINGS, CAN OCCUR ON ANY OF THE ABOVE ROUTING CONDITIONS.
- CONDUIT SLEEVE, WITH INSULATING BUSHINGS.
- FLEXIBLE METALLIC CONDUIT, EQUIPMENT CONNECTION.
- CROSSMARKS ON BRANCH CIRCUIT CONDUIT RUNS INDICATE THE QUANTITY OF CONDUCTORS AS FOLLOWS (GROUND CONDUCTORS ARE NOT NOTED, BUT SHOULD BE INCLUDED IN EVERY CONDUIT WITH POWER CONDUCTORS):
  1. NO CROSSMARKS INDICATES TWO #12 AWG CONDUCTORS, UON.
  2. THREE TO SIX CROSSMARKS INDICATES THE QUANTITY OF #12 AWG CONDUCTORS, UON.
  3. SEVEN OR MORE CROSSMARKS INDICATES THE QUANTITY OF #10 AWG CONDUCTORS, UON.
- SURFACE RACEWAY; TYPE, DEVICE SPACING AND MOUNTING AS NOTED ON PLANS.
- CABLE TRAYS/RUNWAYS, REFER TO PLANS AND/OR SPECS FOR SIZE AND MOUNTING.

FIRE ALARM

- C — SMOKE DETECTOR INITIATING DEVICE, CEILING MOUNTED IN FLUSH OR SURFACE JUNCTION BOX. "C" DENOTES MULTI-CRITERIA CARBON MONOXIDE AND SMOKE DETECTOR.
- SMOKE DETECTOR INITIATING DEVICE, WALL MOUNTED IN FLUSH JUNCTION BOX, MAXIMUM 6" BELOW CEILING.
- SMOKE DETECTOR INITIATING DEVICE, MOUNTED TO STRUCTURE ABOVE SUSPENDED CEILING IN SURFACE JUNCTION BOX OR SUSPENDED IN JUNCTION BOX.
- SMOKE DETECTOR INITIATING DEVICE, DUCT-MOUNTED TYPE WITH SAMPLING TUBE.
- SMOKE DETECTOR INITIATING DEVICE, IN-DUCT MOUNTED TYPE.
- PROJECTED BEAM SMOKE DETECTOR INITIATING DEVICES TO INCLUDE TRANSMITTER, RECEIVER AND REMOTE INDICATOR STATION, WALL MOUNTED IN FLUSH JUNCTION BOX BELOW BEAM DETECTOR AT +42" AFF. BEAM DETECTORS ARE EITHER CEILING OR WALL MOUNTED 6" BELOW CEILING.
- HEAT DETECTOR INITIATING DEVICE, CEILING MOUNTED IN FLUSH OR SURFACE JUNCTION BOX.
- HEAT DETECTOR INITIATING DEVICE, WALL MOUNTED IN FLUSH JUNCTION BOX, MAXIMUM 6" BELOW CEILING.
- HEAT DETECTOR INITIATING DEVICE, MOUNTED TO STRUCTURE ABOVE SUSPENDED CEILING IN SURFACE JUNCTION BOX.
- F — MANUAL PULL STATION INITIATING DEVICE, WALL MOUNTED AT +48" UON.
- SPRINKLER SYSTEM WATER FLOW SWITCH, NIEC. SYMBOL DENOTES INTERFACE FOR MONITORING CONNECTION FROM FIRE ALARM SYSTEM.
- SPRINKLER SYSTEM TAMPER SWITCH, NIEC. SYMBOL DENOTES INTERFACE FOR MONITORING CONNECTION FROM FIRE ALARM SYSTEM.
- SPRINKLER SYSTEM POST INDICATING VALVE 'PIV', NIEC. SYMBOL DENOTES INTERFACE FOR MONITORING CONNECTION FROM FIRE ALARM SYSTEM. INCLUDE A REMOTE MOUNTED ADDRESSABLE MONITORING MODULE AT PIV.
- SM — REMOTE MOUNTED SINGLE INPUT, ADDRESSABLE, MONITORING MODULE FOR INITIATING CIRCUIT CONNECTION.
- DM — REMOTE MOUNTED DUAL INPUT, ADDRESSABLE, MONITORING MODULE FOR INITIATING CIRCUIT CONNECTION.
- CR — REMOTE MOUNTED PROGRAMMABLE CONTROL RELAY MODULE FOR ADDRESSABLE CONTROL.
- DPS — DIFFERENTIAL PRESSURE SWITCH, NIEC. SYMBOLS DENOTES INTERFACE FOR MONITORING CONNECTION FROM FIRE ALARM SYSTEM TO ANNUNCIATE FAN OPERATION. INCLUDE A REMOTE MOUNTED ADDRESSABLE MONITORING MODULE AT EACH LOCATION.
- EOL — END-OF-LINE RESISTOR.
- CT — CURRENT TRANSFORMER FOR MONITORING AVAILABLE POWER.
- FRAP — FIREMANS REMOTE ANNUNCIATOR PANEL FRAP, FLUSH WALL MOUNTED, +42" UON.
- MAGNETIC TYPE DOOR HOLD OPEN/RELEASE DEVICE, WALL MOUNTED, NIEC. SYMBOL DENOTES INTERFACE FOR POWER AND CONTROL CONNECTIONS FROM FIRE ALARM SYSTEM.
- DOOR HOLD OPEN/RELEASE DEVICE INTEGRATED IN DOOR HARDWARE CLOSURE EQUIPMENT, NIEC. SYMBOL DENOTES INTERFACE FOR POWER AND CONTROL CONNECTIONS FROM FIRE ALARM SYSTEM.
- AUDIBLE NOTIFICATION APPLIANCE, WALL MOUNTED, 6" BELOW CEILING OR +80" AFF, WHICHEVER IS LOWER.
- VISIBLE NOTIFICATION APPLIANCE, WALL MOUNTED, 6" BELOW CEILING OR +80" AFF, WHICHEVER IS LOWER. NUMBER ASSOCIATED WITH 'cd' REPRESENTS CANDELA RATING OF STROBE.
- AUDIBLE/VISIBLE NOTIFICATION APPLIANCE, WALL MOUNTED, 6" BELOW CEILING OR +80" AFF, WHICHEVER IS LOWER. NUMBER ASSOCIATED WITH 'cd' REPRESENTS CANDELA RATING OF STROBE.
- AUDIBLE NOTIFICATION APPLIANCE, CEILING MOUNTED IN FLUSH BACK BOX.
- VISIBLE NOTIFICATION APPLIANCE, CEILING MOUNTED IN FLUSH BACK BOX. NUMBER ASSOCIATED WITH 'cd' REPRESENTS CANDELA RATING OF STROBE.
- AUDIBLE/VISIBLE NOTIFICATION APPLIANCE, CEILING MOUNTED IN FLUSH BACK BOX. NUMBER ASSOCIATED WITH 'cd' REPRESENTS CANDELA RATING OF STROBE.
- D 2 — MOTOR OPERATED FIRE/SMOKE DAMPER "FSD", NIEC. SYMBOL DENOTES FIRE ALARM INTERFACE WITH PROGRAMMABLE CONTROL RELAY FOR FSD CONTROL AND DUAL INPUT ADDRESSABLE MONITORING MODULE FOR POSITION MONITORING VIA END SWITCHES.
- B — FIRE ALARM BELL FOR SPRINKLER FLOW ANNUNCIATOR, NIEC, POWERED AND INSTALLED BY ELECTRICAL, WALL MOUNTED ON EXTERIOR OF BUILDING.
- THERMISTOR SENSOR DEVICE IN FSAE LOBBIES FOR TEMPERATURE MONITORING, WALL MOUNTED 6" BELOW CEILING.
- SMOKE ALARM FOR RESIDENTIAL DWELLING UNITS, NON-ADDRESSABLE, 120V DEVICE WITH BATTERY BACK-UP, CEILING MOUNTED IN FLUSH OR SURFACE JUNCTION BOX.
- SMOKE ALARM FOR RESIDENTIAL DWELLING UNITS, NON-ADDRESSABLE, 120V DEVICE WITH BATTERY BACK-UP, WALL MOUNTED MAXIMUM 6" BELOW CEILING IN FLUSH JUNCTION BOX.
- C — COMBINATION SMOKE AND CARBON MONOXIDE ALARM FOR RESIDENTIAL DWELLING UNITS, NON-ADDRESSABLE, 120V DEVICE WITH BATTERY BACK-UP, CEILING MOUNTED IN FLUSH OR SURFACE JUNCTION BOX.
- C — COMBINATION SMOKE AND CARBON MONOXIDE ALARM FOR RESIDENTIAL DWELLING UNITS, NON-ADDRESSABLE, 120V DEVICE WITH BATTERY BACK-UP, WALL MOUNTED MAXIMUM 6" BELOW CEILING IN FLUSH JUNCTION BOX.
- CS — REMOTE 2-WAY COMMUNICATION STATION, WALL MOUNTED, +42" AFF.
- BS — 2-WAY COMMUNICATION BASE STATION, WALL MOUNTED, +42" AFF.

DIGITAL LIGHTING CONTROLS

- D — SINGLE ZONE DIMMER SWITCH WITH ON/OFF/DIM CAPABILITIES, WALL MOUNTED, +42" UON.
- S — SINGLE ZONE SWITCH WITH ON/OFF CAPABILITIES, WALL MOUNTED, +42" UON.
- SC — SCENE OR MULTI-ZONE CONTROLLER WITH ON/OFF/DIM CAPABILITIES ZONE, WALL MOUNTED, +42" UON.
- M — LIGHTING CONTROL OCCUPANCY SENSOR WITH DIMMING, WALL MOUNTED, +42" UON.
- M1 — LIGHTING CONTROL OCCUPANCY SENSOR WITH SINGLE LEVEL SWITCHING, WALL MOUNTED, +42" UON.
- DS — DAYLIGHT HARVESTING SENSOR, CEILING MOUNTED.
- M — OCCUPANCY SENSOR, CEILING MOUNTED FOR AREA COVERAGE.
- PLC — PLUG LOAD CONTROLLER, UL LISTED FOR CONTROLLING RECEPTACLES, 20A RATED.
- RMD / RMS — REMOTE DIMMING OR SWITCHING MODULE, NUMBER OF RELAYS CONTROLLED AS INDICATED ON THE PLAN. MAY CONSIST OF ONE DEVICE WITH MULTIPLE RELAYS, OR MORE THAN ONE SINGLE-RELAY DEVICE. DEVICE SHALL BE LOCATED CONCEALED IN AN EASILY ACCESSIBLE SPACE.
- HVAC — HVAC INTERFACE DEVICE; ROOM HVAC TO SHUT DOWN WHEN ROOM IS VACANT.
- NET — NETWORK INTERFACE, QUANTITY OF COMPONENTS, OR INTEGRATION OF THIS FEATURE INTO OTHER DEVICES, MAY VARY BY MANUFACTURER.
- LCP — LIGHTING CONTROL PANEL.

AUDIO/VISUAL

- PA — PA LOUDSPEAKER, WALL MOUNTED, 12" BELOW CEILING OR +96" AFF, WHICHEVER IS LOWER. 25V, 70V, 100V, OR IP AS INDICATED ON DRAWINGS AND SPECS.
- PA — PA LOUDSPEAKER, CEILING MOUNTED IN FLUSH BACK BOX. 25V, 70V, 100V OR IP AS INDICATED ON DRAWINGS AND SPECS.
- SP — AV PROGRAM SPEAKER, WALL MOUNTED.
- SP — AV PROGRAM SPEAKER, CEILING OR STRUCTURE MOUNTED.
- IP — AUDIO AND VIDEO INTERFACE PLATE, WALL MOUNTED, +18" UON OR AS OTHERWISE NOTED.
- IP — AUDIO AND VIDEO INTERFACE PLATE, MOUNTED IN FLUSH FLOOR BOX.
- AV — AUDIO AND VIDEO CABLE DISPLAY PLATE, WALL MOUNTED, 4 11/16" BOX WITH 1 1/4" CONDUIT TO ACCESSIBLE CEILING. HEIGHT AS NOTED.
- AV — AUDIO AND VIDEO CABLE AT PROJECTOR THROUGH SUPPORT, DIRECT CONNECT TO PROJECTOR.
- INDICATING CLOCK WITH CLOCK OUTLET, WALL MOUNTED, 12" BELOW CEILING OR +96" AFF, WHICHEVER IS LOWER.
- PA — COMBINATION LOUDSPEAKER/INDICATING CLOCK WITH CLOCK OUTLET, WALL MOUNTED IN COMBINATION BACK BOX, 12" BELOW CEILING OR +96" AFF, WHICHEVER IS LOWER.

ABBREVIATIONS

A	AMPERES	KO	CONDUIT KNOCKOUT
AFI	ARC FAULT CIRCUIT INTERRUPTER	LCP	LIGHTING CONTROL PANEL
AF	AMPERE OVERCURRENT FRAME SIZE (WHEN APPLIED TO CIRCUIT BREAKERS) OR AMPERE FUSE SIZE (WHEN APPLIED TO FUSES)	MBGB	MAIN BUILDING GROUND BUS
		MCB	MAIN CIRCUIT BREAKER
		MCC	MOTOR CONTROL CENTER
AFF	ABOVE FINISHED FLOOR	MDF	MAIN DISTRIBUTION FRAME
AIC	ASYMMETRIC INTERRUPTING CURRENT	MLO	MAIN LUGS ONLY
AL	ALUMINUM	MTC	EMPTY CONDUIT
AT	AMPERE OVERCURRENT TRIP (WHEN APPLIED TO CIRCUIT BREAKERS)	MTS	MANUAL TRANSFER SWITCH
AV	AUDIO / VIDEO	(N)	NEW
ATS	AUTOMATIC TRANSFER SWITCH	NC	NORMALLY CLOSED
BAS	BUILDING AUTOMATION SYSTEM	NF	NON-FUSED
BPS	BOLTED PRESSURE CONTACT SWITCH	NIEC	NOT IN ELECTRICAL CONTRACT
C	CONDUIT	NL	NIGHT LIGHT, UNSWITCHED
CCTV	CLOSED CIRCUIT TELEVISION	NO	NORMALLY OPEN
CEC	CALIFORNIA ELECTRICAL CODE	NTS	NOT TO SCALE
CL	CURRENT LIMITING CIRCUIT BREAKER OR FUSE	OC	ON CENTER
		OFCI	OWNER FURNISHED CONTRACTOR INSTALLED
CP	CIRCULATION PUMP		
CT	CURRENT TRANSFORMER	PA	PUBLIC ADDRESS
CU	COPPER	PDZ	PRIMARY DAYLIGHT ZONE
DF	DRINKING FOUNTAIN	PNL	PANEL
(E)	EXISTING TO REMAIN	PQM	POWER QUALITY METER
EC	ELECTRICAL CONTRACTOR	PT	POTENTIAL TRANSFORMER
EF	EXHAUST FAN	PVC	POLYVINYL CHLORIDE
EP	EXPLOSION PROOF	(R)	EXISTING TO BE REMOVED
EPO	EMERGENCY POWER OFF	(RR)	REMOVE AND RELOCATE
EMT	ELECTRICAL METALLIC TUBING	SAD	SEE ARCHITECTURAL DRAWINGS
EWH	ELECTRIC WATER HEATER	TC	TIME CLOCK
F	FUSED	TP	TWISTED-PAIR
(F)	FUTURE	SDZ	SECONDARY DAYLIGHT ZONE
FACP	FIRE ALARM CONTROL PANEL	SPD	SURGE PROTECTION DEVICE
FFCP	FIREMAN'S FAN CONTROL PANEL	TX	TRANSFORMER
FLA	FULL LOAD AMPERES	TYP	TYPICAL
FMC	FLEXIBLE METAL CONDUIT	UON	UNLESS OTHERWISE NOTED
FSD	FIRE/SMOKE DAMPER	UPS	UNINTERRUPTIBLE POWER SUPPLY
FRAP	FIREMAN'S REMOTE ANNUNCIATOR PANEL	V	VOLTS
		VA	VOLTS-AMPS
G	GROUND	VFD	VARIABLE FREQUENCY DRIVE
GB	GROUND BUS	VM	VENDING MACHINE
GFCI	GROUND FAULT CIRCUIT INTERRUPTER	WAP	WIRELESS ACCESS POINT
GND	GROUND	WP	WEATHERPROOF
GRAP	GENERATOR REMOTE ANNUNCIATOR PANEL	2SP	TWO SPEED
GRC	GALVANIZED RIGID CONDUIT	1Ø	1-PHASE
HNC	HOME NETWORK CABINET	3Ø	3-PHASE
HPC	HIGH PRESSURE CONTACT SWITCH	1P	1-POLE
IDF	INTERMEDIATE DISTRIBUTION FRAME	2P	2-POLE
IG	ISOLATED GROUND	3P	3-POLE
INV	INVERTER	3W	3-WIRE
IMC	INTERMEDIATE METAL CONDUIT	4W	4-WIRE

APPLIANCES

DO	DOUBLE OVEN	MW	MICROWAVE
DW	DISHWASHER	RF	REFRIGERATOR
ED	ELECTRIC DRYER	RH	RANGE HOOD
EO	ELECTRIC OVEN/RANGE	UR	UNDERCOUNTER REFRIGERATOR
GD	GARBAGE DISPOSER	WC	WINE COOLER
GR	GAS RANGE	WM	WASHING MACHINE

ELECTRICAL SHEET INDEX

SHEET NO.	SHEET NAME
E0.1	SYMBOLS LIST & SHEET INDEX
E0.2	POWER ONE-LINE DIAGRAM, RISERS & SCHEDULES
E1.1	ELECTRICAL SITE PLAN
E2.1	ELECTRICAL PLAN
E3.1	FIRE ALARM PLAN & RISER DIAGRAM
E3.2	FIRE ALARM DETAILS, SCHEDULES & NOTES
E4.1	ELECTRICAL DETAILS

AGENCY APPROVAL DSA# XX-XXXXXXXXX

IDENTIFICATION STAMP
DIV. OF THE STATE ARCHITECT
APP: 02-122533 INC:
REVIEWED FOR
SS ☑ FLS ☑ ACS ☑
DATE: 05/22/2024

19·6

1715 R STREET, SUITE 200
SACRAMENTO, CA 95811
TEL (916) 786-8178

CONSULTANTS

CIVIL ENGINEER
WARREN CONSULTING ENGINEERING, INC.
1117 Windfield Way, Suite 110
El Dorado Hills, CA 95762
TEL (916)-985-1870

MECHANICAL ENGINEER
WESTON & ASSOCIATES MECHANICAL ENGINEERS, INC.
601 University Avenue, Suite 260
Sacramento, CA 95825
TEL (916)-482-0820

ELECTRICAL ENGINEER
THE ENGINEERING ENTERPRISE
1305 Marina Village Parkway
Alameda, CA 94501
TEL (530)-927-5793

BUILDING MANUFACTURER
AMERICAN MODULAR SYSTEMS
787 Spreckels Avenue
Manteca, CA 95336
TEL (209)-825-1921

The Engineering Enterprise
CONSULTING ENGINEERS
ALAMEDA | AUBURN | LOS ANGELES
NEOSHO | SAN DIEGO | SANTA BARBARA
https://www.engent.com

PROFESSIONAL STAMP
REGISTERED PROFESSIONAL ENGINEER #E01549 Exp. 06/30/25 SCOTT WHEELER ELECTRICAL STATE OF CALIFORNIA

REVISIONS

NO.	DATE	DESCRIPTION

THE ARCHITECT DOES NOT REPRESENT THAT THESE PLANS OR THE SPECIFICATIONS ARE SUITABLE FOR ANY SITE OTHER THAN THE ONE FOR WHICH THEY WERE SPECIFICALLY PREPARED. THE ARCHITECT DISCLAIMS RESPONSIBILITY FOR THESE PLANS AND SPECIFICATIONS IF THEY ARE USED IN WHOLE OR IN PART AT ANY OTHER SITE. WRITTEN DIMENSIONS ON THESE DRAWINGS SHALL HAVE PRECEDENCE OVER SCALED DIMENSIONS.

PROJECT OWNER & TITLE

GALT JOINT UNIION ELEMENTARY SCHOOL DISTRICT
1018 C Street, Suite 210
Galt, CA 95632

VERNON E. GREER ELEMENTARY SCHOOL RELOCATABLE BLGS
248 West A Street
Galt, CA 95632

SHEET TITLE

SYMBOLS LIST & SHEET INDEX

DRAWN BY: TEE JOB NUMBER: 23544.01

SHEET NO.

E0.1

DATE: MAY 16, 2024

FILE LOCATION: C:\Users\bimhoff\Documents\BIM\23544.01_Greer ES New Relocatable Blgs_A24_bimhoffCZK8V.rvt
DATE PLOTTED: 4/5/2024 3:25:19 PM

FEEDER SCHEDULE

FEEDER SCHEDULE GENERAL NOTES

1. COPPER FEEDER SIZES SHOWN IN THIS SCHEDULE ARE BASED ON CONDUCTORS WITH THHN/THWN-2 INSULATION IN EMT CONDUIT.
2. ALUMINUM FEEDER SIZES SHOWN IN THIS SCHEDULE ARE BASED ON CONDUCTORS WITH XHHW-2 INSULATION IN EMT CONDUIT.
3. FEEDER SIZES SHOWN IN THIS SCHEDULE ARE BASED ON AN AMBIENT TEMPERATURE OF 30 DEGREES C (86 DEGREES F).
4. FEEDERS CONSISTING OF MULTIPLE SETS OF CONDUCTORS AND CONDUITS ARE TO BE PROVIDED WITH THE INDICATED SIZE GROUND CONDUCTOR IN EACH CONDUIT.
5. PER CEC ARTICLE 110.14, ALL FEEDERS SIZED AT #2 AWG OR LESS ARE CALCULATED PER 60 DEGREE TABLE. FEEDERS GREATER THAN #2 AWG ARE RATED 75 DEGREE.

FEEDER SCHEDULE REMARKS

A. OVERSIZED 150% NEUTRAL, SUITABLE FOR SERVICE FROM K-13 RATED TRANSFORMERS.
B. FEEDER APPROVED FOR USE WITH SEPARATELY DERIVED SYSTEM; GROUNDING AS REQUIRED BY CEC ARTICLES 240 AND 250.
C. FEEDER GROUND AND BONDING JUMPER SHALL HAVE AN AREA NOT LESS THAN 12.5% OF THE AREA OF THE LARGEST PHASE CONDUCTOR.
D. INCREASE CONDUIT TO THE NEXT LARGER TRADE SIZE WHEN USING SCHEDULE 40 OR 80 PVC CONDUIT.
E. PER CEC SECTION 240.4(B), FOR OVERCURRENT DEVICES RATED 800A OR LESS, THE NEXT HIGHER STANDARD OVERCURRENT DEVICE RATING (ABOVE THE AMPACITY OF THE CONDUCTORS) CAN BE USED. RULE CAN NOT BE APPLIED IF 100% RATED BREAKERS ARE USED.
F. PER CEC 240.21(C), THE PROVISIONS OF 240.4(B) SHALL NOT BE PERMITTED FOR TRANSFORMER SECONDARY CONDUCTORS.

FEEDER TAG	FEEDER DESCRIPTION	CONDUIT	CONDUCTORS		SEPARATELY DERIVED SYSTEM		REMARKS
			PHASE/NEUTRAL	GROUND	GROUNDING ELECTRODE	BONDING JUMPER	
1004	95 AMP, 4 WIRE	1-1.50"	4 #2 CU	1 #8 CU	-	-	D,E

DSA ANCHORAGE SCHEDULE

APPLICABLE CODE: 2022 CBC

MEP COMPONENT ANCHORAGE NOTE

ALL MECHANICAL, PLUMBING, AND ELECTRICAL COMPONENTS SHALL BE ANCHORED AND INSTALLED PER THE DETAILS ON THE DSA-APPROVED CONSTRUCTION DOCUMENTS. THE FOLLOWING COMPONENTS SHALL BE ANCHORED OR BRACED TO MEET THE FORCE AND DISPLACEMENT REQUIREMENTS PRESCRIBED IN THE 2022 CBC SECTIONS 1617A.1.18 THROUGH 1617A.1.26 AND ASCE 7-16 CHAPTERS 13, 26, AND 30:

1. ALL PERMANENT EQUIPMENT AND COMPONENTS.
2. TEMPORARY, MOVABLE OR MOBILE EQUIPMENT THAT IS PERMANENTLY ATTACHED (E.G., HARD WIRED) TO THE BUILDING UTILITY SERVICES SUCH AS ELECTRICITY, GAS OR WATER. "PERMANENTLY ATTACHED" SHALL INCLUDE ALL ELECTRICAL CONNECTIONS EXCEPT PLUGS FOR 110/220 VOLT RECEPTACLES HAVING A FLEXIBLE CABLE.
3. TEMPORARY, MOVABLE OR MOBILE EQUIPMENT WHICH IS HEAVIER THAN 400 POUNDS OR HAS A CENTER OF MASS LOCATED 4 FEET OR MORE ABOVE THE ADJACENT FLOOR OR ROOF LEVEL THAT DIRECTLY SUPPORT THE COMPONENT IS REQUIRED TO BE RESTRAINED IN A MANNER APPROVED BY DSA.

THE FOLLOWING MECHANICAL AND ELECTRICAL COMPONENTS SHALL BE POSITIVELY ATTACHED TO THE STRUCTURE BUT NEED NOT DEMONSTRATE DESIGN COMPLIANCE WITH THE REFERENCES NOTED ABOVE. THESE COMPONENTS SHALL HAVE FLEXIBLE CONNECTIONS PROVIDED BETWEEN THE COMPONENT AND ASSOCIATED DUCTWORK, PIPING, AND CONDUIT. FLEXIBLE CONNECTIONS MUST ALLOW MOVEMENT IN BOTH TRANSVERSE AND LONGITUDINAL DIRECTIONS:

A. COMPONENTS WEIGHING LESS THAN 400 POUNDS AND HAVING A CENTER OF MASS LOCATED 4 FEET OR LESS ABOVE THE ADJACENT FLOOR OR ROOF LEVEL THAT DIRECTLY SUPPORT THE COMPONENT.
B. COMPONENTS WEIGHING LESS THAN 20 POUNDS, OR IN THE CASE OF DISTRIBUTED SYSTEMS, LESS THAN 5 POUNDS PER FOOT, WHICH ARE SUSPENDED FROM A ROOF OR FLOOR OR HUNG FROM A WALL.

THE ANCHORAGE OF ALL MECHANICAL, ELECTRICAL AND PLUMBING COMPONENTS SHALL BE SUBJECT TO THE APPROVAL OF THE DESIGN PROFESSIONAL IN GENERAL RESPONSIBLE CHARGE OR STRUCTURAL ENGINEER DELEGATED RESPONSIBILITY AND ACCEPTANCE BY DSA. THE PROJECT INSPECTOR WILL VERIFY THAT ALL COMPONENTS AND EQUIPMENT HAVE BEEN ANCHORED IN ACCORDANCE WITH THE ABOVE REQUIREMENTS.

APPLICABLE CODE: 2022 CBC

PIPING, DUCTWORK, AND ELECTRICAL DISTRIBUTION SYSTEM BRACING NOTE

PIPING, DUCTWORK, AND ELECTRICAL DISTRIBUTION SYSTEMS SHALL BE BRACED TO COMPLY WITH THE FORCES AND DISPLACEMENTS PRESCRIBED IN ASCE 7-16 SECTION 13.3 AS DEFINED IN ASCE 7-16 SECTIONS 13.6.5, 13.6.6, 13.6.7, 13.6.8; AND 2022 CBC, SECTIONS 1617A.1.24, 1617A.1.25 AND 1617A.1.26. THE METHOD OF SHOWING BRACING AND ATTACHMENTS TO THE STRUCTURE FOR THE IDENTIFIED DISTRIBUTION SYSTEM ARE AS NOTED BELOW. WHEN BRACING AND ATTACHMENTS ARE BASED ON A PREAPPROVED INSTALLATION GUIDE (E.G., HCAI OPM FOR 2013 CBC OR LATER), COPIES OF THE BRACING SYSTEM INSTALLATION GUIDE OR MANUAL SHALL BE AVAILABLE ON THE JOBSITE PRIOR TO THE START OF AND DURING THE HANGING AND BRACING OF THE DISTRIBUTION SYSTEMS. THE STRUCTURAL ENGINEER OF RECORD SHALL VERIFY THE ADEQUACY OF THE STRUCTURE TO SUPPORT THE HANGER AND BRACE LOADS.

ELECTRICAL DISTRIBUTION SYSTEMS, OPTION 1: DETAILED ON THE APPROVED DRAWINGS WITH PROJECT SPECIFIC NOTES AND DETAILS.

NUMBERED SHEET NOTES

1. INDOOR/OUTDOOR RATED CAT6A.
2. ROUTE NEW FEEDER THROUGH EXISTING CONDUIT IF POSSIBLE. IF NOT REFER TO FEEDER SCHEDULE FOR CONDUIT REQUIREMENTS.
3. PROVIDE NEW CIRCUIT BREAKER IN EXISTING PREPARED SPACE AT EXISTING DISTRIBUTION PANELBOARD. NEW BREAKER TO MATCH MANUFACTURER (SQUARE D), TYPE, AIC RATING OF EXISTING BREAKERS. PROVIDE ALL REQUIRED MOUNTING HARDWARE AND FILLER PLATES. PROVIDE ENGRAVED NAMEPLATE.
4. POWER PANEL PROVIDED BY MODULAR BUILDING MANUFACTURER, PROVIDE CONNECTION PER 1/E4.0.

PROJECT GENERAL NOTES

1. ELECTRICAL SCOPE SHALL COMPLY WITH THE LATEST ADOPTED EDITIONS OF THE CALIFORNIA ELECTRIC CODE (CEC), CALIFORNIA BUILDING CODE (CBC), CALIFORNIA FIRE CODE (CFC), CALIFORNIA MECHANICAL CODE (CMC), NATIONAL FIRE PROTECTION ASSOCIATION (NFPA 72) AND THE CALIFORNIA ENERGY CODE.
2. THE CONTRACTOR SHALL VISIT THE JOBSITE AND VERIFY ALL EXISTING CONDITIONS PRIOR TO BIDDING THE PROJECT AND SHALL INCLUDE IN THEIR BID THE NECESSARY COSTS TO CONSTRUCT THIS PROJECT IN ACCORDANCE WITH THE ELECTRICAL DRAWINGS, SPECIFICATIONS, AND ALL APPLICABLE CODES.
3. DRAWINGS INDICATE GENERAL ARRANGEMENT OF ELECTRICAL SYSTEMS AND WORK. FOLLOW THE DRAWINGS IN LAYING OUT WORK AND VERIFY EXACT LOCATIONS WITH ARCHITECTURAL FLOOR PLAN AND RCP DRAWINGS. ALSO, CHECK DRAWINGS OF OTHER TRADES TO VERIFY LOCATIONS OF EQUIPMENT REQUIRING ELECTRICAL CONNECTIONS AND COORDINATE SPACE CONDITIONS WITH THEIR INSTALLATION. FINAL LOCATIONS SHALL BE ADJUSTED TO MEET FIELD CONDITIONS.
4. NOT EVERY ELECTRICAL RACEWAY, BOX, CONDUCTOR, ETC., FOR A COMPLETE ELECTRICAL INSTALLATION, IS SHOWN ON THESE DRAWINGS. THIS IS DONE FOR CLARITY PURPOSES AND EASE OF INTERPRETING DRAWINGS. PROVIDE ALL ADDITIONAL ITEMS REQUIRED TO MAKE THE ELECTRICAL SYSTEMS COMPLETE AND OPERATIONAL.
5. WORK PERFORMED UNDER THIS CONTRACT SHALL CONFORM TO THESE DRAWINGS AND SHALL ALSO COMPLY WITH THE ELECTRICAL SPECIFICATIONS. IN THE EVENT THAT THERE IS A DISCREPANCY BETWEEN THE DRAWINGS AND SPECIFICATIONS, THE MORE STRINGENT OF THE REQUIREMENTS SHALL TAKE PRECEDENT.
6. ALL NEW ELECTRICAL MATERIALS AND EQUIPMENT SHALL BE UNDERWRITER'S LABORATORIES (UL) LISTED OR ELECTRICAL TESTING LABORATORIES (ETL) LISTED AND BEAR THEIR LABELS.
7. ALL ELECTRICAL MATERIALS SHALL BE NEW AND UNUSED, AND OF THE SAME MANUFACTURER OF LIKE EQUIPMENT AND/OR SYSTEMS.
8. CONTRACTOR SHALL REMOVE ALL LEFTOVER CONDUIT, WIRE, SCRAPS, ETC. AND LEAVE PREMISES CLEAN AND FREE OF TRASH AND DEBRIS RESULTING FROM THEIR WORK.
9. PRIOR TO COMMENCING ANY TRENCHING SCOPE ON-SITE, CONTACT THE UTILITIES UNDERGROUND SERVICE ALERT TO DETERMINE THE EXACT LOATIONS OF ANY EXISTING UNDERGROUND UTILITY LINES, WHICH MIGHT GET DAMAGED DURING EXCAVATION. WHERE INTERFERENCE IS POSSIBLE, TRENCHING SHALL BE DONE MANUALLY.
10. MINIMUM CONDUIT TRADE SIZE FOR EXTERIOR APPLICATIONS SHALL BE 1.0", UNLESS OTHERWISE NOTED.
11. ALL UNDERGROUND FEEDER CONDUITS SHALL HAVE A MINIMUM COVER OF 24". WHERE FEEDER CONDUITS ARE INSTALLED UNDER ROADS OR PAVED SURFACE WITH VEHICLE TRAFFIC, THE MINIMUM COVER SHALL INCREASE TO 36". INCLUDE A MINIMUM 12" HORIZONTAL SEPARATION BETWEEN LOW-VOLTAGE AND LINE-VOLTAGE CONDUITS INSTALLED IN SAME TRENCH. INSTALL A WARNING/MARKER TAPE 12" OVER THE CONDUITS.
12. ALL UNDERGROUND CONDUITS ORIGINATING FROM BUILDING EXTERIOR AND TERMINATING IN ELECTRICAL EQUIPMENT WITHIN THE BUILDING INTERIOR SHALL BE SEALED AT BOTH ENDS AFTER CONDUCTORS ARE INSTALLED, TO PREVENT MOISTURE FROM COMING IN CONTACT WITH LIVE PARTS.
13. SITE PULLBOXES FOR BRANCH CIRCUITING SHALL BE SIZED TO CODE MINIMUM REQUIREMENTS. OBTAIN APPROVAL FROM LANDSCAPE ARCHITECT FOR ANY PULLBOXES NEEDED TO FACILITATE SITE CONDUIT REQUIREMENTS.
14. ALL GROUNDING ELECTRODES WITHIN BUILDING OR STRUCTURE SHALL BE BONDED TOGETHER TO FORM A SINGLE GROUNDING ELECTRODE SYSTEM.
15. ALL SEPARATELY DERIVED SYSTEMS SHALL COMPLY WITH CODE, CEC 250.104, FOR BONDING TO METAL WATER PIPING AND STRUCTURAL METAL.
16. FURNISH, INSTALL, AND CONNECT A CODE SIZED INSULATED OR BARE COPPER GROUND CONDUCTOR IN ALL BRANCH CIRCUITS AND FEEDER CONDUITS.
17. WHERE UNGROUNDED CONDUCTORS ARE INCREASED IN SIZE TO ACCOMMODATE VOLTAGE DROP, THE EQUIPMENT GROUND CONDUCTOR SHALL ALSO BE INCREASED IN SIZE PROPORTIONATELY, ACCORDING TO THE CIRCULAR MIL AREA OF UNGROUNDED CONDUCTORS.
18. ALL EQUIPMENT CONNECTED BY PERMANENT WIRING METHODS SHALL BE GROUNDED.
19. BRANCH CIRCUIT CONDUCTORS SHALL BE SIZED TO PREVENT VOLTAGE DROP EXCEEDING 3% AT THE FARTHEST OUTLET OR DEVICE. THE MAXIMUM VOLTAGE DROP ALLOWED ON COMBINED FEEDERS AND BRANCH CIRCUITS SHALL NOT EXCEED 5% TO THE FARTHEST OUTLET OR DEVICE.
20. ALL CONDUCTORS ON THIS PROJECT SHALL BE STRANDED COPPER.
21. MULTIWIRE BRANCH CIRCUITS SHALL BE PROVIDED WITH A MEANS TO SIMULTANEOUSLY DISCONNECT ALL UNGROUNDED CONDUCTORS AT THE POINT WHERE THE BRANCH CIRCUIT ORIDINATES, I.E. HANDLE TIES OR MULTIPOLE CIRCUIT BREAKERS.
22. CONDUIT ROUTING ON DRAWINGS IS ESSENTIALLY DIAGRAMMATIC. CONTRACTOR SHALL LAYOUT RUNS TO SUIT FIELD CONDITIONS, LIMITING BENDS AND BOXES, AND SHALL COORDINATE INSTALLATION WITH WORK OF OTHER TRADES.
23. PROVIDE INSULATING BUSHINGS OR INSULATED THROAT CONNECTORS AT BOTH ENDS OF ALL CONDUIT SLEEVES.
24. ALL JUNCTION AND PULL BOXES SHALL BE SIZED PER CODE TO ACCOMMODATE NUMBER OF CONDUITS AND/OR CONDUCTORS ROUTED TO AND FROM BOXES.
25. PROVIDE A PULL WIRE/TAPE IN ALL EMPTY CONDUIT RUNS OVER 15' IN LENGTH.
26. NO PIPING, DUCTWORK, OR EQUIPMENT FOREIGN TO ELECTRICAL EQUIPMENT SHALL BE ALLOWED WITHIN THE DEDICATED SPACE ABOVE ELECTRICAL EQUIPMENT.
27. PROVIDE ENGRAVED NAMEPLATES FOR ALL ELECTRICAL PANELBOARDS, SWITCHBOARDS, SWITCHGEAR, TRANSFORMERS, AND DISCONNECT SWITCHES, AS DESCRIBED IN THE SPECIFICATIONS.
28. CONTRACTOR SHALL ENSURE THAT THE ELECTRICAL EQUIPMENT PROVIDED UNDER THEIR CONTRACTOR WILL FIT WITHIN THE SPACES PROVIDED IN THE BID DOCUMENTS, WHETHER PROVIDED BY THE SPECIFIED EQUIPMENT MANUFACTURER OR NOT. NO ADDITIONAL COMPENSATION WILL BE CONSIDERED IF CONTRACTOR NEEDS TO ADJUST EQUIPMENT PACKAGE TO OBTAIN REDUCED DIMENISONS.
29. CONTRACTOR IS RESPONSIBLE FOR SUBMITTING REVISED LAYOUTS OF DISTRIBUTION EQUIPMENT IN SPACES, FOR APPROVAL BY ENGINEER, IF PROPOSED INSTALLATION DIFFERS FROM CONSTRUCTION DOCUMENTS. SUBMISSION MUST BE REVIEWED PRIOR TO RELEASE OF EQUIPMENT AND PRIOR TO INSTALLATION.
30. ALL FLOOR AND/OR FREE-STANDING ELECTRICAL EQUIPMENT SHALL BE MOUNTED ON A 4" HIGH CONCRETE HOUSEKEEPING PAD, U.O.N.
31. ALL OUTDOOR ELECTRICAL EQUIPMENT SHALL BE WEATHERPROOF (NEMA 3R RATED, MINIMUM) AND LISTED FOR EXTERIOR APPLICATIONS.
32. ALL CIRCUIT BREAKERS SERVING THE FIRE ALARM CONTROL PANEL AND FIRE ALARM SYSTEM COMPONENTS SHALL HAVE LOCKABLE HANDLES AND SHALL BE RED IN COLOR, FOR EASE IN IDENTIFICATION.
33. MOUNTING HEIGHTS OF ALL WIRING DEVICES ARE DIMENSIONED TO THE CENTER OF THE DEVICE, UNLESS OTHERWISE NOTED.
34. PROVIDE GFCI TYPE RECEPTACLES WITH WEATHERPROOF "WHILE-IN-USE" COVERPLATES WITHIN 25' OF ALL EXTERIOR HVAC AND PLUMBING EQUIPMENT.
35. WHERE RECEPTACLES ARE LOCATED OUTSIDE OR IN WET/DAMP LOCATIONS, PROVIDE WEATHERPROOF WHILE-IN-USE COVERPLATES.
36. ALL WIRING DEVICES AND JUNCTION BOX COVERS SHALL HAVE TYPE-ON-TAPE LABELS INDICATING THE PANELBOARD AND CIRCUIT NUMBER(S) SERVING EACH DEVICE.
37. CONTRACTOR SHALL SIZE ALL JUNCTION AND PULL BOXES PER THE MINIMUM CODE REQUIREMENTS OF CEC ARTICLE 314, UNLESS OTHERWISE NOTED ON DRAWINGS.

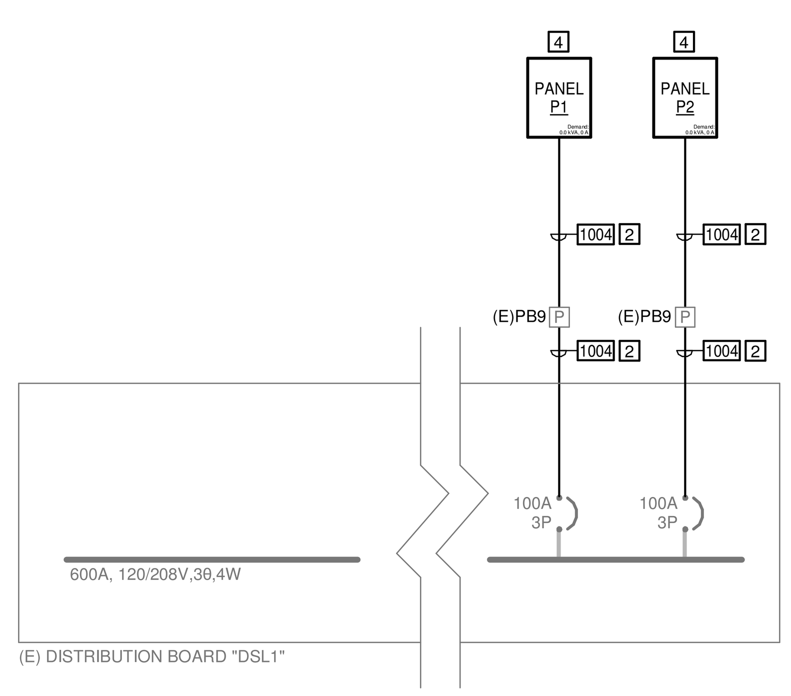

1 PARTIAL POWER ONE-LINE DIAGRAM

SCALE: 12" = 1'-0"

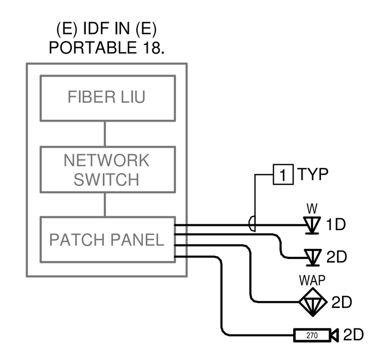

2 CAMPUS FIBER RISER DIAGRAM

SCALE:NTS

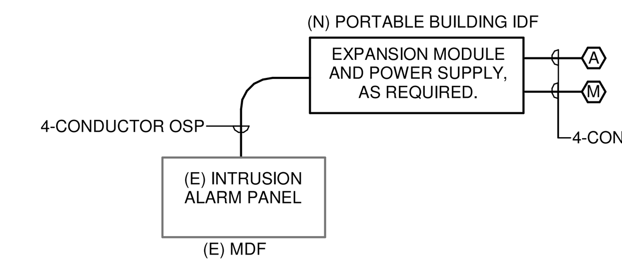

EXISTING CAMPUS INTRUSION ALARM SYSTEM IS BY ADEMCO. CONTRACTOR SHALL BE A FACTORY AUTHORIZED TECHNICIAN, AND PROVIDE SHOP DRAWINGS FOR A COMPLETE AND FUNCTIONAL SYSTEM.

3 INTRUSION ALARM RISER DIAGRAM

SCALE:NTS

AGENCY APPROVAL DSA# XX-XXXXXXXXX

IDENTIFICATION STAMP
DIV. OF THE STATE ARCHITECT
APP: 02-122533 INC:
REVIEWED FOR
SS ☑ FLS ☑ ACS ☑
DATE: 05/22/2024

19·6

1715 R STREET, SUITE 200
SACRMENTO, CA 95811
TEL (916) 786-8178

CONSULTANTS

CIVIL ENGINEER
WARREN CONSULTING ENGINEERING, INC.
1117 Windfield Way, Suite 110
El Dorado Hills, CA 95762
TEL (916)-985-1870

MECHANICAL ENGINEER
WESTON & ASSOCIATES MECHANICAL ENGINEERS, INC.
601 University Avenue, Suite 260
Sacramento, CA 95825
TEL (916)-482-0820

ELECTRICAL ENGINEER
THE ENGINEERING ENTERPRISE
1305 Marina Village Parkway
Alameda, CA 94501
TEL (530)-927-5793

BUILDING MANUFACTURER
AMERICAN MODULAR SYSTEMS
787 Spreckels Avenue
Manteca, CA 95336
TEL (209)-825-1921

The Engineering Enterprise
CONSULTING ENGINEERS
ALAMEDA | AUBURN | LOS ANGELES
NEOSHO | SAN DIEGO | SANTA BARBARA
https://www.engent.com

PROFESSIONAL STAMP

REGISTERED PROFESSIONAL ENGINEER
#E01549
Exp. 06/30/25
SCOTT WHEELER
ELECTRICAL
STATE OF CALIFORNIA

REVISIONS
#

NO.	DATE	DESCRIPTION

THE ARCHITECT DOES NOT REPRESENT THAT THESE PLANS OR THE SPECIFICATIONS ARE SUITABLE FOR ANY SITE OTHER THAN THE ONE FOR WHICH THEY WERE SPECIFICALLY PREPARED. THE ARCHITECT DISCLAIMS RESPONSIBILITY FOR THESE PLANS AND SPECIFICATIONS IF THEY ARE USED IN WHOLE OR IN PART AT ANY OTHER SITE. WRITTEN DIMENSIONS ON THESE DRAWINGS SHALL HAVE PRECEDENCE OVER SCALED DIMENSIONS.

PROJECT OWNER & TITLE

GALT JOINT UNIION ELEMENTARY SCHOOL DISTRICT
1018 C Street, Suite 210
Galt, CA 95632

VERNON E. GREER ELEMENTARY SCHOOL RELOCATABLE BLGS

248 West A Street
Galt, CA 95632

SHEET TITLE

POWER ONE-LINE DIAGRAM, RISERS & SCHEDULES

DRAWN BY: TEE JOB NUMBER: 23544.01

SHEET NO.

E0.2

DATE: MAY 16, 2024

FILE LOCATION: C:\Users\bimhoff\Documents\BIM\23544.01_Greer ES New Relocatable Blgs_A24_bimhoffCZK8V.rvt

DATE PLOTTED: 4/5/2024 3:25:19 PM

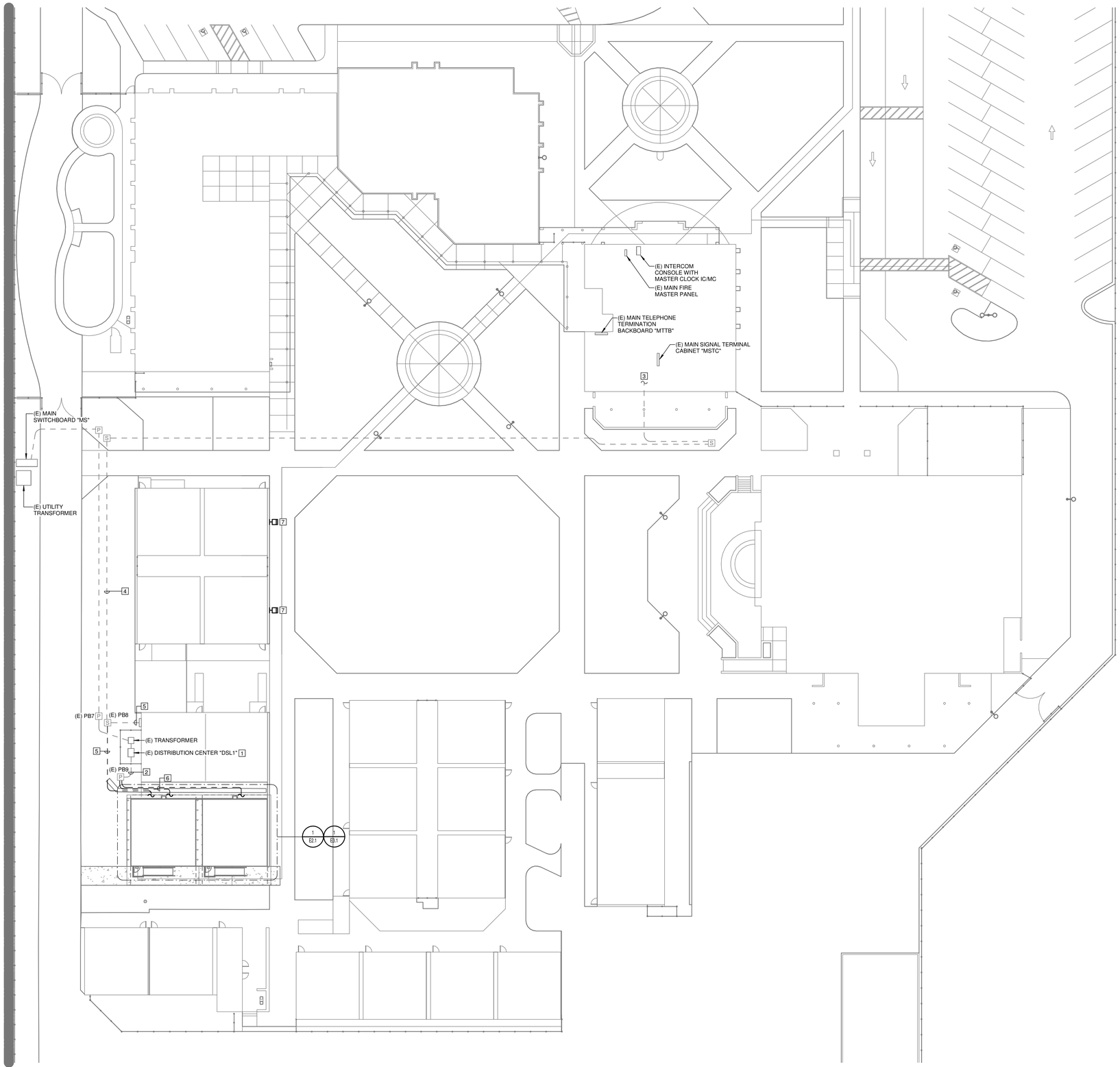

1 ELECTRICAL SITE PLAN

SCALE: 1" = 20'-0"

GENERAL SHEET NOTES

A. CALL U.S.A. PRIOR TO UNDERGROUND WORK, 1-800-227-2600

B. PROVIDE 6-INCH WIDE UNDERGROUND WARNING TAPE ABOVE ALL NEW UNDERGROUND CONDUITS. INSTALL AT 12-INCHES ABOVE THE CONDUIT. PROVIDE 'RED' TAPE FOR POWER APPLICATIONS, 'ORANGE' TAPE FOR LOW VOLTAGE APPLICATIONS, AND BOTH FOR JOINT TRENCH.

C. REFER TO THE POWER ONE-LINE DIAGRAM FOR FEEDER REQUIREMENTS. REFER TO LOW VOLTAGE RISER DIAGRAMS FOR CABLING REQUIREMENTS.

D. ALL UNDERGROUND POWER AND COMMUNICATIONS CONDUITS SHALL BE COORDINATED WITH FOOTINGS SHOWN ON THE STRUCTURAL DRAWINGS. SHALL CROSS THE FOOTINGS AT A 90-DEGREE ANGLE, AND SHALL BE ROUTED TO AVOID PRIMARY FOOTINGS WHERE POSSIBLE.

E. CONDUIT ROUTING, AND PULLBOX/HANHALE LOCATIONS ARE DIAGRAMMATIC AND NOT DIMENSIONED. LOCATE NEW HANDHOLES IN CLOSES LANDSCAPED AREA WHEREVER POSSIBLE, COORDINATE WITH LANDSCAPE ARCHITECT. PROVIDE WITH STEEL TRAFFIC RATED LID IN ANY AREA SUBJECT TO VEHICULAR TRAFFIC.

NUMBERED SHEET NOTES

1. REFER TO POWER ONE-LINE DIAGRAM FOR NEW WORK AT DISTRIBUTION BOARD "DSL1".
2. ROUTE NEW FEEDER IN EXISTING 2" SPARE CONDUIT, REFER TO POWER ONE-LINE DIAGRAM FOR FEEDER REQUIREMENTS.
3. EXTEND PATHWAYS TO EXISTING MDF/MPOE WITH LOW VOLTAGE HEAD-END EQUIPMENT, FIRE ALARM CONTROL PANEL, INTRUSION ALARM EQUIPMENT, AND CLOCK/PA.
4. ROUTE NEW LOW VOLTAGE CABLING IN EXISTING SIGNAL SYSTEM CONDUIT PATHWAY, REFER TO LOW VOLTAGE RISER DIAGRAMS FOR CABLING REQUIREMENTS.
5. UTILIZE EXISTING SIGNAL CONDUIT PATHWAYS AND EXISTING CABLING IF POSSIBLE, IF NOT EXTEND (3) 2.0"C TO NEW PORTABLE BUILDINGS FOR FIBER, CLOCK/PA & INTRUSION, FIRE ALARM, REFER TO E2.1 FOR CONTINUATION, REFER TO LOW VOLTAGE RISER DIAGRAMS FOR NEW CABLING REQUIREMENTS.
6. UTILIZE EXISTING POWER CONDUIT PATHWAY FOR NEW FEEDER IF POSSIBLE, IF NOT REFER TO POWER ONE-LINE ON SHEET E0.2 FOR FEEDER AND CONDUIT INFORMATION.
7. PROVIDE NEW SECURITY LIGHTING WITH MOTION SENSOR, RAB SMSBULLET-2X12-Y-W OR EQUAL. INSTALL ABOVE CEILING HEIGHT AND CONNECT TO EXISTING EXTERIOR LIGHTING CIRCUIT. FOR 1FC ILLUMINATION OF THE EGRESS PATH TO SAFE DISPERSAL AREA.

AGENCY APPROVAL DSA# XX-XXXXXXXXX

IDENTIFICATION STAMP
DIV. OF THE STATE ARCHITECT
APP: 02-122533 INC:
REVIEWED FOR
SS ☑ FLS ☑ ACS ☑
DATE: 05/22/2024

196

1715 R STREET, SUITE 200
SACRMENTO, CA 95811
TEL (916) 786-8178

CONSULTANTS

CIVIL ENGINEER
WARREN CONSULTING ENGINEERING, INC.
1117 Windfield Way, Suite 110
El Dorado Hills, CA 95762
TEL (916)-985-1870

MECHANICAL ENGINEER
WESTON & ASSOCIATES MECHANICAL ENGINEERS, INC.
601 University Avenue, Suite 260
Sacramento, CA 95825
TEL (916)-482-0820

ELECTRICAL ENGINEER
THE ENGINEERING ENTERPRISE
1305 Marina Village Parkway
Alameda, CA 94501
TEL (530)-927-5793

BUILDING MANUFACTURER
AMERICAN MODULAR SYSTEMS
787 Spreckels Avenue
Manteca, CA 95336
TEL (209)-825-1921

The Engineering Enterprise
CONSULTING ENGINEERS
ALAMEDA | AUBURN | LOS ANGELES
NEOSHO | SAN DIEGO | SANTA BARBARA
https://www.engent.com

PROFESSIONAL STAMP

REGISTERED PROFESSIONAL ENGINEER
#E23544
Exp. 12/31/23
SCOTT WHEELER
ELECTRICAL
STATE OF CALIFORNIA

REVISIONS

NO.	DATE	DESCRIPTION

THE ARCHITECT DOES NOT REPRESENT THAT THESE PLANS OR THE SPECIFICATIONS ARE SUITABLE FOR ANY SITE OTHER THAN THE ONE FOR WHICH THEY WERE SPECIFICALLY PREPARED. THE ARCHITECT DISCLAIMS RESPONSIBILITY FOR THESE PLANS AND SPECIFICATIONS IF THEY ARE USED IN WHOLE OR IN PART AT ANY OTHER SITE. WRITTEN DIMENSIONS ON THESE DRAWINGS SHALL HAVE PRECEDENCE OVER SCALED DIMENSIONS.

PROJECT OWNER & TITLE

GALT JOINT UNIION ELEMENTARY SCHOOL DISTRICT
1018 C Street, Suite 210
Galt, CA 95632

VERNON E. GREER ELEMENTARY SCHOOL RELOCATABLE BLGS

248 West A Street
Galt, CA 95632

SHEET TITLE

ELECTRICAL SITE PLAN

DRAWN BY: TEE JOB NUMBER: 23544.01

SHEET NO.

E1.1

DATE: MAY 16, 2024

DATE PLOTTED: 4/5/2024 3:25:19 PM FILE LOCATION: C:\Users\bimhof\Documents\BIM\23544.01_Greer ES New Relocatable Bldgs_A24_bimhofCZK8V.rvt

2 PORTABLES DEMO PLAN

SCALE: 1/4" = 1'-0"

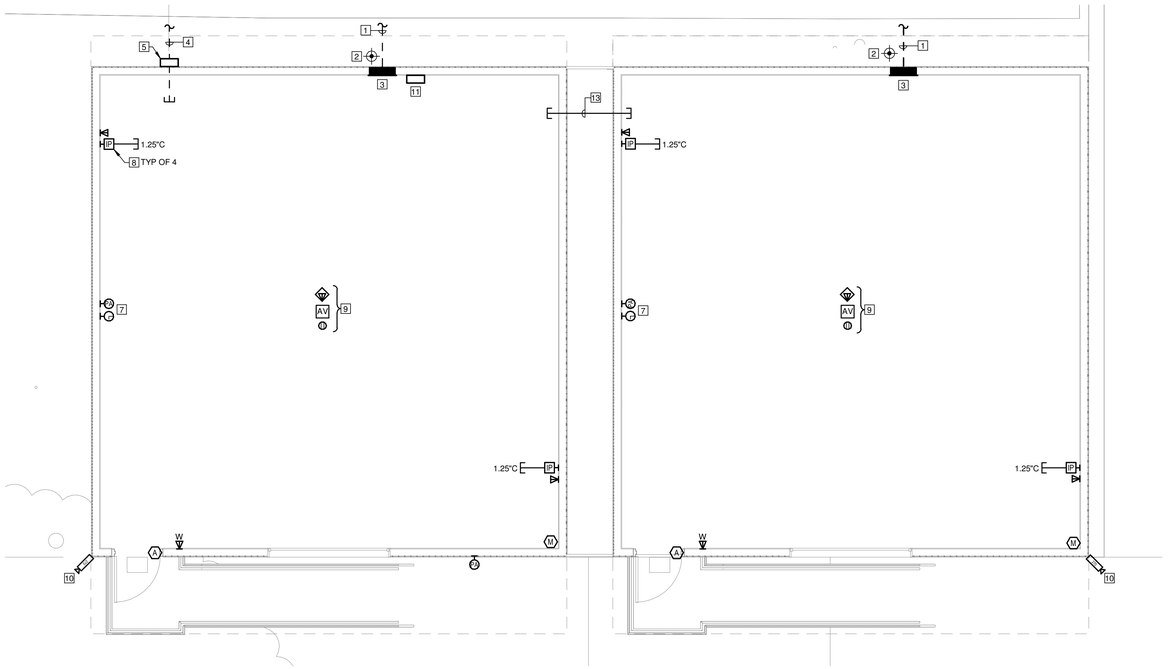

1 PORTABLES ELECTRICAL PLAN

SCALE: 1/4" = 1'-0"

GENERAL SHEET NOTES

A. REFER TO THE PC APPROVED MODULAR BUILDING PLANS FOR POWER AND LIGHTING PLANS. SITE CONTRACTOR SHALL PROVIDE ALL INFRASTRUCTURE, CABLING & WIRE, ETC. DEVICES, ETC. AS REQUIRED FOR ALL WORK NOT SHOWN ON THE PC APPROVED PLANS.

B. PROVIDE NEW TELECOMMUNICATIONS INFRASTRUCTURE SYSTEM PER DISTRICT STANDARDS AND THE SPECIFICATIONS. COORDINATE WITH THE DISTRICT IT REPRESENTATIVE.

C. WIRELESS ACCESS POINT EQUIPMENT SHALL BE OWNER FURNISHED, OWNER INSTALLED. PROVIDE TWO NETWORK DROPS AT EACH LOCATION SHOWN, CONFIRM EXACT LOCATION WITH DISTRICT IT REPRESENTATIVE PRIOR TO ROUGH-IN.

D. PROVIDE NEW COMPONENTS AT THE HEAD END OF CLOCK/PA SYSTEM LOCATED IN THE CAMPUS MDF IN THE ADMINISTRATION BUILDING AS REQUIRED TO EXPAND THE EXISTING SYSTEM. REFER TO SHEET E0.2 FOR RISER DIAGRAM. PROVIDE NEW CLOCK/SPEAKERS COMPATIBLE WITH THE EXISTING SYSTEM. PROVIDE COMPLETE SHOP DRAWINGS FOR THIS SYSTEM TO INCLUDE ALL COMPONENTS AND WIRING REQUIRED FOR A COMPLETE AND FUNCTIONAL SYSTEM

E. PROVIDE ALL INFRASTRUCTURE (POWER, DATA, AV CABLING) AS REQUIRED FOR OWNER FURNISHED, CONTRACTOR INSTALLED INTERACTIVE DISPLAY. CONTRACTOR SHALL VERIFY ON SITE IF NEW DEVICES CAN BE INSTALLED FLUSH IN WALL WITHOUT NEED FOR SURFACE RACEWAY, I.E. CUT-IN BOXES AND DEVICE RINGS, AND FISHING CABLE THROUGH WALL CAVITY. IF THIS IS NOT POSSIBLE, INSTALL THE SPECIFIED SURFACE RACEWAY; COORDINATE ROUTING OF RACEWAY WITH THE ARCHITECT PRIOR TO INSTALLATION.

F. PROVIDE NEW INTRUSION ALARM COMPONENTS COMPATIBLE WITH THE EXISTING CAMPUS 'ADEMCO' SYSTEM. CONTRACTOR SHALL PROVIDE COMPLETE SHOP DRAWINGS FOR INSTALLATION OF A COMPLETE AND FUNCTIONAL SYSTEM.

G. CONTRACTOR SHALL VISIT THE SITE PRIOR TO BID TO BECOME FAMILIARIZED WITH THE PROJECT SITE AND EXISTING CONDITIONS.

H. REFER TO ARCHITECTURAL DEMOLITION PLANS TO COORDINATE SCOPE OF DEMOLITION.

NUMBERED SHEET NOTES

1. UTILIZE EXISTING POWER CONDUIT PATHWAY FOR NEW FEEDER IF POSSIBLE, IF NOT REFER TO POWER ONE-LINE ON SHEET E0.2 FOR FEEDER AND CONDUIT INFORMATION.
2. GROUND ROD IN GROUND WELL, INSTALL PER 6/E4.1 AND BOND TO MODULAR BUILDING PER 8/E4.1.
3. POWER PANEL PROVIDED BY MODULAR BUILDING MANUFACTURER, PROVIDE CONNECTION PER 1/E4.1.
4. UTILIZE EXISTING SIGNAL CONDUIT PATHWAYS AND EXISTING CABLING IF POSSIBLE, IF NOT EXTEND (3) 2.0"C TO NEW PORTABLE BUILDINGS FOR FIBER, CLOCK/PA & INTRUSION, FIRE ALARM, REFER TO E1.1 FOR CONTINUATION, REFER TO LOW VOLTAGE RISER DIAGRAMS FOR NEW CABLING REQUIREMENTS.
5. ROUTE LOW VOLTAGE CONDUITS TO N3R JUNCTION BOX INSTALLED PER 5/E4.1 AND STUB 3-2"C. INTO ACCESSIBLE CEILING SPACE AS INDICATED.
6. NOT USED.
7. CONTRACTOR TO RELOCATE (E) CLOCK AND SPEAKER FROM EXISTING PORTABLES THAT ARE BEING REMOVED AND REINSTALL IN NEW PORTABLES. REWIRE BACK TO SIGNAL TERMINAL CABINET AT EXISTING PORTABLE. CONFIRM WITH OWNER ON EXACT LOCATION OF CLOCK AND SPEAKER IN THE NEW PORTABLE BEFORE INSTALLATION.
8. PROVIDE EXTRON WPD 100 AV SERIES HDMI WALLPLATE DEVICE IN EXTRA-DEEP 4" SQ BOX WITH SINGLE GANG DEVICE RING, OR GANG WITH TELECOM DEVICE. PROVIDE 50' FSD DIGITAL RIBBON HDMI CABLE TO AV BOX IN CEILING.
9. PROVIDE PROJECTOR PLATE, CHIEF CMA-440 OR EQUAL, WITH 4 CEILING SUPPORT WIRES TO STRUCTURE ABOVE, FOR OWNER FURNISHED PROJECTOR PLATE. LOCATE DEVICES IN PROJECTOR PLATE. DATA DROPS ARE FOR PROJECTOR AND FOR OWNER FURNISHED, CONTRACTOR INSTALLED WAP INSTALLED BEHIND THE PROJECTOR. AV PLATE SHALL HAVE TWO HDMI TERMINALS.
10. IP BASED SECURITY CAMERAS ARE OWNER FURNISHED, OWNER INSTALLED. PROVIDE 2 TERMINATED DATA DROPS ABOVE CEILING IN CORNER NEAR CAMERA. CONTRACTOR TO PROVIDE WEATHERPROOF CONDUIT PENETRATION AND FLEX TO CAMERA LOCATION, COORDINATE WITH THE OWNER'S VENDOR.
11. CONNECT FIRE ALARM BOOSTER PANEL BP-1 TO PORTABLE BUILDING ELECTRICAL PANEL.
12. CONNECT STAND ALONE EVAC PANEL TO PORTABLE BUILDING ELECTRICAL PANEL.
13. PROVIDE 2-2"C. SLEEVES BETWEEN BUILDINGS FOR LOW VOLTAGE CABLING PER 4/E4.1.
14. CONTRACTOR SHALL PULL BACK ALL LOW VOLTAGE CABLING TO NEAREST PULLBOX FOR THE POSSIBLE REUSE FOR THE NEW PORTABLES. ALL TECHNOLOGY DEVICES, I.E. FLAT PANEL DISPLAYS, COMPUTERS ETC., SHALL BE GIVEN BACK TO THE DISTRICT. ELECTRICAL FEEDERS FEEDING EXISTING PORTABLES TO BE REMOVED ENTIRELY. ALL EXISTING UNDERGROUND CONDUIT FEEDING EXISTING PORTABLES ARE TO REMAIN AND BE UTILIZED IF AND WHEN POSSIBLE.

AGENCY APPROVAL DSA# XX-XXXXXXXXX

IDENTIFICATION STAMP
DIV. OF THE STATE ARCHITECT
APP: 02-122533 INC:
REVIEWED FOR
SS ☑ FLS ☑ ACS ☑
DATE: 05/22/2024

196

1715 R STREET, SUITE 200
SACRMENTO, CA 95811
TEL (916) 786-8178

CONSULTANTS

CIVIL ENGINEER
WARREN CONSULTING ENGINEERING, INC.
1117 Windfield Way, Suite 110
El Dorado Hills, CA 95762
TEL (916)-985-1870

MECHANICAL ENGINEER
WESTON & ASSOCIATES MECHANICAL ENGINEERS, INC.
601 University Avenue, Suite 260
Sacramento, CA 95825
TEL (916)-482-0820

ELECTRICAL ENGINEER
THE ENGINEERING ENTERPRISE
1305 Marina Village Parkway
Alameda, CA 94501
TEL (530)-927-5793

BUILDING MANUFACTURER
AMERICAN MODULAR SYSTEMS
787 Spreckels Avenue
Manteca, CA 95336
TEL (209)-825-1921

The Engineering Enterprise
CONSULTING ENGINEERS
ALAMEDA | AUBURN | LOS ANGELES
NEOSHO | SAN DIEGO | SANTA BARBARA
https://www.engent.com

PROFESSIONAL STAMP

REGISTERED PROFESSIONAL ENGINEER
#E25544
Exp. 12/31/25
SCOTT WHEELER
ELECTRICAL
STATE OF CALIFORNIA

REVISIONS

NO.	DATE	DESCRIPTION

THE ARCHITECT DOES NOT REPRESENT THAT THESE PLANS OR THE SPECIFICATIONS ARE SUITABLE FOR ANY SITE OTHER THAN THE ONE FOR WHICH THEY WERE SPECIFICALLY PREPARED. THE ARCHITECT DISCLAIMS RESPONSIBILITY FOR THESE PLANS AND SPECIFICATIONS IF THEY ARE USED IN WHOLE OR IN PART AT ANY OTHER SITE. WRITTEN DIMENSIONS ON THESE DRAWINGS SHALL HAVE PRECEDENCE OVER SCALED DIMENSIONS.

PROJECT OWNER & TITLE

GALT JOINT UNIION ELEMENTARY SCHOOL DISTRICT
1018 C Street, Suite 210
Galt, CA 95632

VERNON E. GREER ELEMENTARY SCHOOL RELOCATABLE BLGS

248 West A Street
Galt, CA 95632

SHEET TITLE

ELECTRICAL PLAN

DRAWN BY: TEE JOB NUMBER: 23544.01

SHEET NO.

E2.1

DATE: MAY 16, 2024

DATE PLOTTED: 4/5/2024 3:25:19 PM FILE LOCATION: C:\Users\bimhof\Documents\BIM\23544.01_Greer ES New Relocatable Bldgs_A24_bimhofCZK6V.rvt

AMP S1

Device Type	QTY	Standby Current (amps) Watts		Current Draw		Total	Alarm Current (amps) Qty		Current Draw		Total
1. System											
6820 EVS	1	50	X	0.0860	=	0.0860	0	X	2.2060	=	2.2060
			X		=		0	X		=	0.0000
			X		=		0	X		=	0.0000
2. Speakers											
Total Speaker Watts @ 25Vrms		0							0.0000	=	0.0000
Total Speaker Watts @ 70.7Vrms		4							0.0566	=	0.0566
				Total Standby Load		**0.0860**			**Total Alarm Load**		**2.2626**
				0							

		Required Standby Time in Hours			
Standby Load Current (Amps)	**0.0860 Amps**	X	24	=	2.064 AH
		Required Alarm Time in Hours			
Alarm Load Current (Amps)	**2.2626 Amps**	X	15	=	0.566 AH
			Total Current Load		**2.63 AH**
			*Multiply by the Derating Factor	=	x 1.25
			Total Ampere Hours Required		**3.29 AH**
		Recommended Batteries:	**7AH BATTERIES**		

*Derating Factor required to compensate for the non-linear discharge characteristic of a battery.

BP-1 CALCULATIONS

Signaling Line Circuit Loading

Qty	Device	DEVICE Standby	DEVICE Alarm	SUBTOTAL Standby	SUBTOTAL Alarm
1	5895XL	0.091000	0.145000	0.091000	0.145000
			Panel Load:	0.091000	0.145000

Notification Circuit Loading

DEVICE	CD	DRAW (EA)	NAC1	NAC2	NAC3	NAC4	NAC5	NAC6	TOTAL
SPEAKER STROBE	15	0.041							
SPEAKER STROBE	30	0.063							
SPEAKER STROBE	75	0.111	2						0.222
STROBE	15	0.041							
STROBE	30	0.063							
STROBE	75	0.111							
STROBE	110	0.125							
Notification Appliance Circuit Loading:			0.222						0.222

Notification Circuit Voltage Drop

CIRCUIT ID	TOTAL A	LENGTH FT.	AWG	%VD	VD
NAC1	0.222	100	12	0.42%	0.09
NAC2			12		
NAC3			12		
NAC4			12		
NAC5			12		
NAC6			12		

Battery Calculation

	Standby	Alarm
Totals Panel Current:	0.091	0.367
Hours in Standby:	24	
Standby Ah:	2.18	
Minutes in Alarm:		15
Alarm Ah		0.09
Spare/Future Capacity - 25%:		0.57
Minumum Battery Capacity Required - Ah:		7.00

Provide next largest capacity battery

Panel Loading

Panel Capacity (Amps):	8.00
Panel Load (Amps):	0.46

ALL LOADS ARE EXPRESSED IN AMPS

FACP CALCULATIONS

Signaling Line Circuit Loading

Qty	Device	DEVICE Standby	DEVICE Alarm	SUBTOTAL Standby	SUBTOTAL Alarm
1	FIRE ALARM CONTROL PANEL	0.081000	0.150000	0.081000	0.150000
14	CONTROL RELAY	0.012000	0.002000	0.168000	0.028000
7	MONITOR MODULE	0.000300	0.000080	0.002100	0.000560
1	MANUAL PULL STATION	0.000250	0.000300	0.000250	0.000300
134	SMOKE DETECTOR	0.000360	0.000400	0.048240	0.053600
11	DUCT SMOKE DETECTOR	0.000360	0.000400	0.003960	0.004400
174	HEAT DETECTOR HT	0.000362	0.000041	0.062988	0.007134
31	HEAT DETECTOR	0.000300	0.000080	0.009300	0.002480
	ISOLATION MODULE				
			Signaling Line Circuit Load:	0.375838	0.246474

Notification Circuit Loading

DEVICE	CD	DRAW (EA)	NAC1	NAC2	NAC3	NAC4	NAC5	NAC6	TOTAL
SPEAKER STROBE									
SPEAKER STROBE									
SPEAKER STROBE									
SPEAKER STROBE									
STROBE									
STROBE									
STROBE									
STROBE									
SPEAKER									
SOUNDER									
Notification Appliance Circuit Loading:									

Notification Circuit Voltage Drop

CIRCUIT ID	TOTAL A	LENGTH FT.	AWG	%VD	VD
NAC1			12		
NAC2			12		
NAC3			12		
NAC4			12		
NAC5			12		
NAC6			12		

Battery Calculation

	Standby	Alarm
Totals Panel Current:	0.376	0.246
Hours in Standby:	24	
Standby Ah:	9.02	
Minutes in Alarm:		15
Alarm Ah		0.06
Spare/Future Capacity - 25%:		2.27
Minumum Battery Capacity Required - Ah:		7.00

Provide next largest capacity battery

Panel Loading

Panel Capacity (Amps):	6.00
Panel Load (Amps):	0.62

ALL LOADS ARE EXPRESSED IN AMPS

GENERAL SHEET NOTES

A. FIRE ALARM CIRCUITS AND CIRCUIT ROUTING ARE SHOW SCHEMATICALLY FOR CLARITY ILLUSTRATING THE WIRING CONFIGURATION NECESSARY FOR PROPER SUPERVISION.

B. FIRE ALARM STROBES SHALL BE SYNCHRONIZED PER NFPA 72.

C. ALL OUTDOOR FIRE ALARM EQUIPMENT SHALL BE LISTED FOR EXTERIOR USE.

D. IN AREAS WHERE DEVICES ARE TO BE CEILING MOUNTED COORDINATE LOCATIONS TO AVOID CONFLICTS WITH EXISTING LIGHT FIXTURES.

E. FIRE ALARM INSTALLATION SHALL COMPLY WITH ALL REQUIREMENTS OF APPLICABLE CODES, STANDARDS AND STATE REGULATIONS.

NUMBERED SHEET NOTES

1 UTILIZE EXISTING FIRE ALARM CONDUIT PATHWAYS AND EXISTING CABLING IF POSSIBLE, IF NOT REFER TO THE 1/E1.1 FOR CONDUIT REQUIREMENTS AND THE FIRE ALARM RISER DIAGRAM FOR CABLING REQUIREMENTS FOR NEW DEVICES.

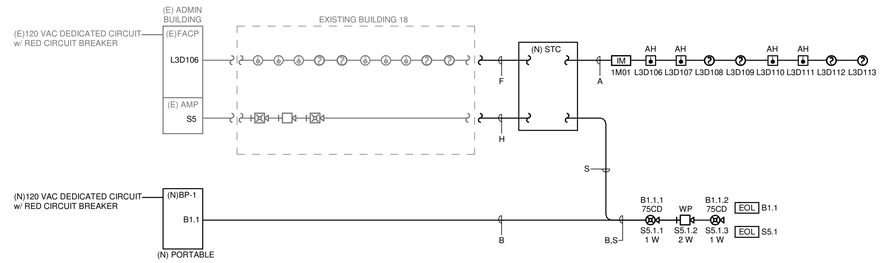

2 PORTABLES FIRE ALARM PLAN - FIRE RISER

SCALE: NTS

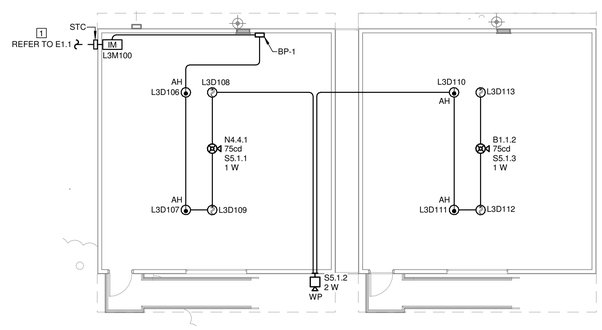

1 PORTABLES FIRE ALARM PLAN

SCALE: 1/8" = 1'-0"

AGENCY APPROVAL DSA# XX-XXXXXXXXX

IDENTIFICATION STAMP
DIV. OF THE STATE ARCHITECT
APP: 02-122533 INC:
REVIEWED FOR
SS ☑ FLS ☑ ACS ☑
DATE: 05/22/2024

196

1715 R STREET, SUITE 200
SACRMENTO, CA 95811
TEL (916) 786-8178

CONSULTANTS

CIVIL ENGINEER
WARREN CONSULTING ENGINEERING, INC.
1117 Windfield Way, Suite 110
El Dorado Hills, CA 95762
TEL (916)-985-1870

MECHANICAL ENGINEER
WESTON & ASSOCIATES MECHANICAL ENGINEERS, INC.
601 University Avenue, Suite 260
Sacramento, CA 95825
TEL (916)-482-0820

ELECTRICAL ENGINEER
THE ENGINEERING ENTERPRISE
1305 Marina Village Parkway
Alameda, CA 94501
TEL (530)-927-5793

BUILDING MANUFACTURER
AMERICAN MODULAR SYSTEMS
787 Spreckels Avenue
Manteca, CA 95336
TEL (209)-825-1921

The Engineering Enterprise
CONSULTING ENGINEERS
ALAMEDA | AUBURN | LOS ANGELES
NEOSHO | SAN DIEGO | SANTA BARBARA
https://www.engent.com

PROFESSIONAL STAMP

REGISTERED PROFESSIONAL ENGINEER
SCOTT WHEELER
ELECTRICAL
STATE OF CALIFORNIA

REVISIONS

NO.	DATE	DESCRIPTION

THE ARCHITECT DOES NOT REPRESENT THAT THESE PLANS OR THE SPECIFICATIONS ARE SUITABLE FOR ANY SITE OTHER THAN THE ONE FOR WHICH THEY WERE SPECIFICALLY PREPARED. THE ARCHITECT DISCLAIMS RESPONSIBILITY FOR THESE PLANS AND SPECIFICATIONS IF THEY ARE USED IN WHOLE OR IN PART AT ANY OTHER SITE. WRITTEN DIMENSIONS ON THESE DRAWINGS SHALL HAVE PRECEDENCE OVER SCALED DIMENSIONS.

PROJECT OWNER & TITLE

GALT JOINT UNIION ELEMENTARY SCHOOL DISTRICT
1018 C Street, Suite 210
Galt, CA 95632

VERNON E. GREER ELEMENTARY SCHOOL RELOCATABLE BLGS

248 West A Street
Galt, CA 95632

SHEET TITLE

FIRE ALARM PLAN & RISER DIAGRAM

DRAWN BY: TEE JOB NUMBER: 23544.01

SHEET NO.

E3.1

DATE: MAY 16, 2024

FILE LOCATION: C:\Users\bimhofl\Documents\BIM\23544.01_Greer ES New Relocatable Blgs_A24_bimhofl\CZK6V.rvt

DATE PLOTTED: 4/5/2024 3:25:19 PM

FIRE ALARM SYSTEM MATRIX

	SMOKE DETECTOR	HEAT DETECTOR	OPEN/SHORT CIRCUIT	GROUND FAULT	A/C LOSS	BATTERY TROUBLE	SYSTEM SILENCE	SYSTEM RESET
ALARM AT FACP & REMOTE ANNUNCIATOR(S)	X	X						
SUPERVISORY AT FACP & REMOTE ANNUNCIATOR(S)								
TROUBLE AT FACP & REMOTE ANNUNCIATOR(S)			X	X	X	X		
REPORT EVENT TO OFFSITE SUPERVISING STATION	X	X	X	X	X	X		
ACTIVATE EVACUATION SIGNALS	X	X						
DEACTIVATE VOICE MESSAGES							X	X
DEACTIVATE VISUAL SIGNALS								X
RESET FACP TO NORMAL CONDITION								X

FIRE ALARM SYSTEM COMPONENT SCHEDULE

SYMBOL	EQUIPMENT DESCRIPTION	MODEL NO.	MANUFACTURER	CSFM LISTING
(E) FACP	FIRE ALARM CONTROL PANEL	6820 EVS	SILENTKNIGHT	7165-0559:0500
BPS	NOTIFICATION BOOSTER PANEL	5496	SILENTKNIGHT	7165-0559:0171
IM	ISOLATOR MODULE	SK-ISO	SILENTKNIGHT	7300-0559:0153
(S)	ADDRESSABLE SMOKE DETECTOR	SK-PHOTO-W	SILENTKNIGHT	7272-0559:0512
AH	ADDRESSABLE HEAT DETECTOR AH = ATTIC HEAT (ie. ABOVE CEILING)	SK-HEAT-HT-W	SILENT KNIGHT	7270-0559:0511
cd 15/30/75/110	CEILING MOUNTED SPEAKER/STROBE	SPSCRL	SYSTEM SENSOR	7320-1653:0505
WP	WEATHERPROOF WALL MOUNTED SPEAKER	SPRK-R	SYSTEM SENSOR	7320-1653:0201

NOTE: CONTRACTOR IS RESPONSIBLE FOR REPLACEMENT OF COMPONENTS SHOWN ON THE FLOOR PLANS. REFER TO SPECIFICATION FOR SPARE DEVICE QUANTITY REQUIREMENTS

FIRE ALARM SYSTEM CABLE SCHEDULE

CABLE TAG	CIRCUIT DESCRIPTION	CABLE TYPE	GAUGE	CONDUCTORS	COLOR
A	SIGNAL LINE CIRCUIT (SLC)	FPL	#18	2	RED JACKET
B	NOTIFICATION APPLIANCE CIRCUIT (NAC)	FPL	#12	2	RED JACKET
C	CONVENTIONAL SUPERVISED CIRCUIT / 24VDC	FPL	#14	2	RED JACKET
F	UNDERGROUND SLC	WATER TIGHT	#14	2	BLACK JACKET
G	UNDERGROUND NAC	WATER TIGHT	#12	2	BLACK JACKET
H	UNDERGROUND SPEAKER CIRCUIT	WATER TIGHT SHIELDED	#14	2	BLACK JACKET
S	SPEAKER CIRCUIT	FPL OVERALL SHIELDED	#14	2	RED JACKET

FIRE ALARM DEVICE MOUNTING DETAIL NOTES

1. MOUNT DOOR HOLDER SMOKE DETECTOR MAXIMUM 3' FROM DOOR AND A MINIMUM OF 1' FROM DOOR.
2. NFPA 72 17.7.3.2.3.1 ON SMOOTH CEILINGS, SPACING FOR SMOKE DETECTORS SHALL BE IN ACCORDANCE WITH ONE OF THE FOLLOWING REQUIREMENTS:
   1. THE DISTANCE BETWEEN SMOKE DETECTORS SHALL NOT EXCEED SPACING OF 30'.
   2. ALL POINTS ON THE CEILING SHALL HAVE A DETECTOR WITHIN A DISTANCE EQUAL TO OR LESS THAN 21'.
3. NFPA 72 17.7.4.1 MOUNT SMOKE DETECTOR MINIMUM OF 3' AWAY FROM DIFFUSER VENT.
4. MOUNT SMOKE DETECTOR FOR FIRE SMOKE DAMPER (FSD) WITHIN 3' OF SUPPLY VENT.
5. DUCT SMOKE DETECTOR SHALL BE MOUNTED 6 TO 10 TIMES THE DIAMETER OF DUCT FROM BEND OR OBSTRUCTION.
6. NFPA 72 17.4.7 WHERE FIRE DETECTORS ARE INSTALLED IN CONCEALED LOCATIONS MORE THAN 10' AFF OR IN ARRANGMENTS WHERE THE DETECTOR'S ALARM OR SUPERVISORY INDICATOR IS NOT VISIBLE TO RESPONDING PERSONNEL. DETECTORS SHALL BE PROVIDED WITH A REMOTE INDICATOR OR SUPERVISORY INDICATION ACCEPTABLE WITH AUTHORITY HAVING JURISDICTION (AHJ).
7. NFPA 72 17.7.3.2.4.2 BEAM POCKET SPOT DETECTOR ARE REQUIRED FOR BEAMS GREATER THAN 18" BELOW CEILING AND SPACED MORE THAN 8' ON CENTER. EACH BAY FORMED BY BEAM SHALL BE TREATED AS A SEPARATE AREA. BEAMS LESS THAN 12" IN DEPTH AND SPACED LESS THAN 8' ON CENTER SHALL HAVE DETECTORS INSTALLED ON THE BOTTOM OF THE BEAM. OR, CEILINGS WITH BEAM DEPTHS LESS THAN 10 PERCENT OF THE CEILING HEIGHT, SMOOTH CEILING SPACING IS PERMITTED AND DETECTORS PLACED ON THE BOTTOM OF THE BEAM. BEAMS EQUAL TO OR GREATER THAN 10 PERCENT OF CEILING HEIGHT WITH BEAM SPACING GREATER THAN 40 PERCENT OF CEILING HEIGHT, SPOT DETECTORS SHALL BE LOCATED IN EACH CELL.
8. NFPA 72 17.6.3.3.1.1 BEAMS PROJECTING LESS THAN 4" SHALL BE TREATED AS A SMOOTH CEILING.
9. NFPA 72 17.6.3.1.3.1 SMOKE DETECTORS SHALL BE MOUNTED ON THE CEILING MINIMUM 4" FROM WALL, AND 4" MINIMUM TO 12" MAXIMUM FROM CEILING MOUNTED ON WALL.
10. NFPA 72 17.14.5 THE OPERABLE PART OF A MANUALLY ACTUATED ALARM-INITIATING DEVICE SHALL NOT BE LESS THAN 42" AFF AND NOT MORE THAN 48" AFF. NFPA 72 17.14.8.4 MANUAL FIRE ALARM BOXES SHALL BE LOCATED WITHIN 5' OF EACH EXIT DOORWAY ON EACH FLOOR.
11. NFPA 72 18.4.8.1 MOUNT EXTERIOR HORN AT 90" MINIMUM AND 100" MAXIMUM TO THE TOP OF THE DEVICE.
12. NFPA 72 18.5.5.2 WHERE LOW CEILING HEIGHTS DO NOT PERMIT WALL MOUNTING AT A MINIMUM OF 80", WALL MOUNTED VISIBLE APPLIANCES SHALL BE MOUNTED WITHIN 6" OF THE CEILING.
13. NFPA 72 18.5.5.1 INTERIOR WALL MOUNTED APPLIANCES SHALL BE MOUNTED SUCH THAT THE ENTIRE LENS IS NOT LESS THAN 80" AFF AND NOT GREATER THAN 96" AFF.
14. NFPA 72 10.4.4 (3) MOUNT FIRE ALARM CONTROL PANELS AND ANNUNCIATORS AT A MAXIMUM OF 48" TO THE TOP OF THE CONTROL PANEL OR KEY BOARDS.
15. CEILING MOUNTED HORN / SPEAKER STROBE
16. MONITOR MODULE
17. RATE OF RISE HEAT DETECTOR, MOUNTED IN ABOVE CEILING / ATTIC SPACE.
18. APPROVED WIRE MANAGEMENT, ie J-HOOK OR D-RING.
19. ABOVE CEILING CIRCUITS ROUTING IN AN ACCESSIBLE ATTIC SPACE.
20. NON-ACCESSIBLE CEILINGS MUST USE EITHER EMT OR APPROVED WIREMOLD RACEWAY, AS SHOWN ON PLANS.
21. MULTI-CRITERIA PHOTOELECTRIC SMOKE / CO DETECTOR WITH SOUNDER BASE. MOUNT IN AREAS WHERE FOSSIL FUEL IS USED.
23. NFPA 72 17.5.3.1.4 DETECTION FOR CONCEALED ACCESSIBLE SPACES ABOVE SUSPENDED CEILING USED AS A RETURN PLENUM SHALL BE PROVIDED AT EACH CONNECTION FROM RETURN AIR PLENUM AT CENTRAL AIR HANDLING UNIT.
24. NFPA 72 7.7.2 WITH EVERY NEW FIRE ALARM SYSTEM A DOCUMENTATION CABINET SHALL BE INSTALLED AT THE FIRE ALARM CONTROL PANEL OR AT ANOTHER LOCATION APPROVED BY AHJ. THE CABINET SHALL BE PROMINENTLY LABELED "SYSTEM RECORD DOCUMENTS".
25. NFPA 90A 6.4.2.1 SMOKE DETECTORS LISTED FOR USE IN AIR DISTRIBUTION SYSTEMS SHALL BE LOCATED AS FOLLOWS: DOWNSTREAM OF THE AIR FILTERS AND AHEAD OF ANY BRANCH CONNECTIONS IN AIR SUPPLY SYSTEMS HAVING A CAPACITY GREATER THAN 2000 CFM.
26. SMOKE DETECTORS SHALL NOT BE CLOSER THAN 1' FROM SPRINKLERS.
27. NFPA 72 17.14.6 MANUAL FIRE ALARM BOXES SHALL BE LOCATED WITHIN 60" OF THE EXIT DOORWAY OPENING.

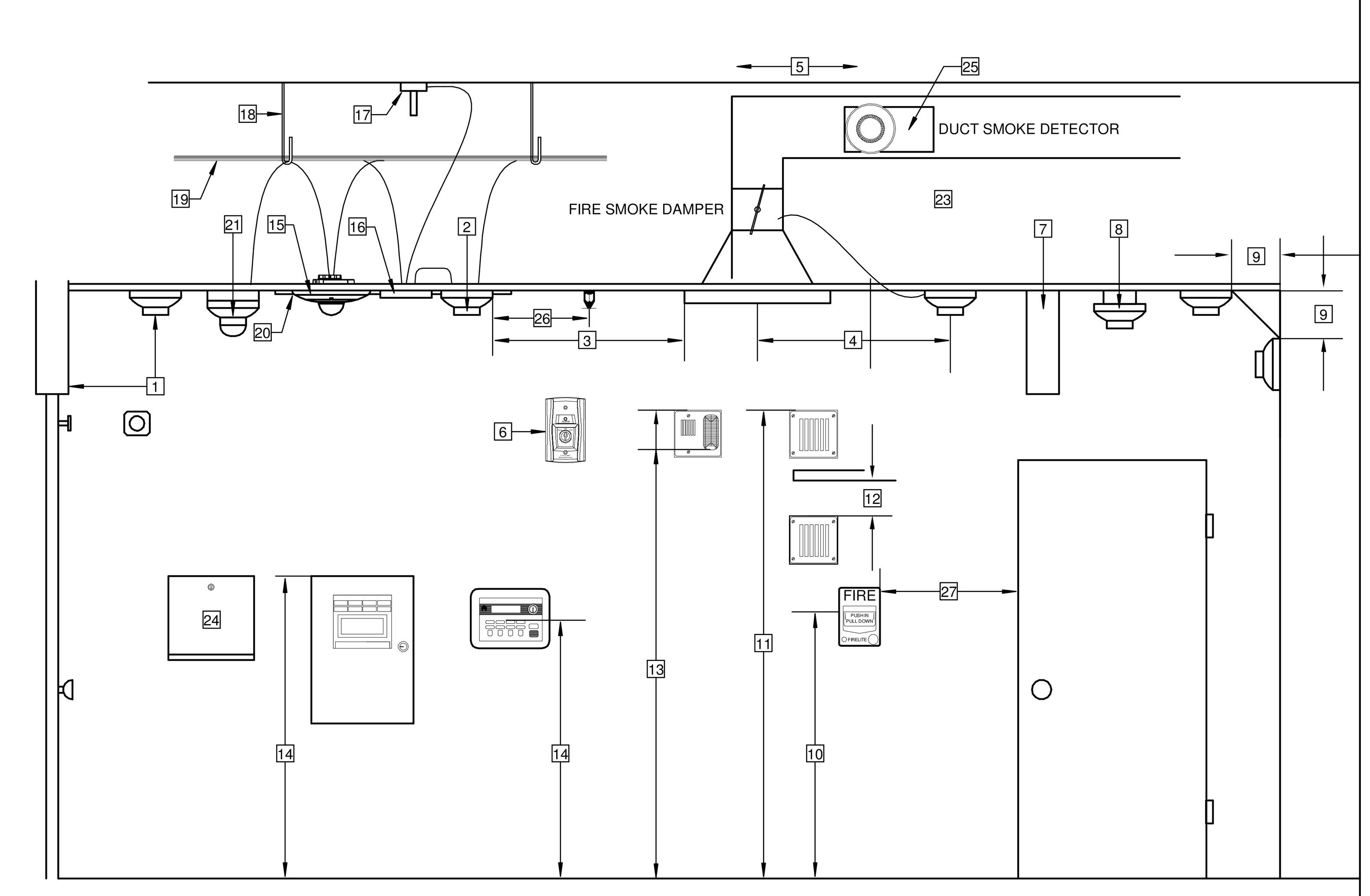

FIRE ALARM NOTES

1. WORK SHALL BE PERFORMED IN ACCORDANCE WITH THE APPLICABLE REGULATIONS,INCLUDING BUT NOT LIMITED TO THE FOLLOWING:

   STATE CALIFORNIA CODE OF REGULATIONS (CCR) 2022 TITLE 24 CALIFORNIA BUILDING CODE

   PART 2, 2022 CALIFORNIA BUILDING CODE (CBC)
   PART 3, 2022 CALIFORNIA ELECTRICAL CODE (CEC), 2022 NEC.
   PART 4, 2022 CALIFORNIA MECHANICAL CODE (CMC)
   PART 5, 2022 CALIFORNIA PLUMBING CODE (CPC)
   PART 9, 2022 CALIFORNIA FIRE CODE (CFC)

   2019 NATIONAL FIRE PROTECTION ASSOCIATION (NFPA) 13, 72, 80, 90A, 99, AND 101.
2. INSTALLATION OF THE SYSTEMS SHALL NOT BE STARTED UNTIL DETAILED DESIGN DOCUMENTATION AND SPECIFICATION, INCLUDING STATE FIRE MARSHALL LISTING SHEETS FOR EACH COMPONENT OF THE SYSTEM HAS BEEN APPROVED BY DSA.
3. UPON COMPLETION OF INSTALLATION OF THE SYSTEMS, A SATISFACTORY TEST OF THE ENTIRE SYSTEM SHALL BE MADE IN THE PRESENCE OF A DSA PROJECT INSPECTOR.
4. A STAMPED SET OF APPROVED FIRE ALARM DESIGN DOCUMENTS SHALL BE ON THE JOB SITE AND USED FOR INSTALLATION.
5. ANY DISCREPANCIES BETWEEN THE DRAWINGS AND THE CODE OR RECOGNIZED STANDARDS SHALL BE BROUGHT TO THE ATTENTION OF DSA AND THE ARCHITECT/ENGINEER OF RECORD.
6. DSA, ARCHITECT/ENGINEER AND OWNER SHALL BE NOTIFIED A MINIMUM OF 48 HOURS PRIOR TO THE FINAL INSPECTION AND/ OR TESTING.
7. ALL PENETRATIONS THROUGH RATED ASSEMBLIES, REQUIRING OPENING PROTECTION SHALL BE PROVIDED WITHIN THE SPECIFICATION WITHIN THE FIRE ALARM SECTION.
8. AUDIBLE DEVICES SHALL PROVIDE A SOUND PRESSURE LEVEL OF 15 DECIBLES (Dba) ABOVE THE AVERAGE AMBIENT SOUND LEVEL OR 5 Dba ABOVE THE MAXIMUM SOUND LEVEL HAVING A DURATION AT LEAST 60 SECONDS, WHICHEVER IS GREATER, IN EVERY OCCUPIED SPACE WITHIN THE BUILDING.
9. AUDIBLE DEVICES SHALL BE SYNCHRONIZED TEMPORAL CODE 3 PATTERN.
10. THE CONTRACTOR SHALL ADJUST/INSTALL DEVICES TO MAXIMIZE PERFORMANCE AND TO MINIMIZE FALSE ALARMS.
11. VISUAL DEVICES SHOULD NOT EXCEED 2 FLASHES PER SECOND AND SHOULD NOT BE SLOWER THAN 1 FLASH EVERY SECOND. THE DEVICE SHALL HAVE A PULSING LIGHT SOURCE NOT LESS THAN 15 CANDELA. VISUAL DEVICES WITHIN 55' FROM EACH OTHER SHALL BE SYNCHRONIZED.
12. UNDERGROUND AND EXTERIOR CONDUIT SHALL HAVE WATERTIGHT FITTINGS AND WIRE TO BE APPROVED FOR WET LOCATIONS.
13. ALL FIRE ALARM WIRING SHALL BE FPL (FIRE POWER LIMITED) OR FPLP (FIRE POWER LIMITED PLENUM) AS REQUIRED FOR APPLICATION. WIRING IN CONDUIT ABOVE GROUND MAY BE THHN OR THWN.
14. PER CEC STANDARDS, ALL WIRING IS TO BE PULLED THROUGH EACH JUNCTION BOX AND CONNECTED DIRECTLY TO EACH FIRE DEVICE. DO NOT SPLICE THE WIRE. ALL BOXES TO BE SIZED PER CEC.
15. IN AREA OF CONSTRUCTION OR POSSIBLE DAMAGE/CONTAMINATION OF NEWLY INSTALLED FIRE ALARM DEVICES SHALL BE COVERED UNTIL AREA IS READY TO BE TURNED OVER TO THE OWNER.
16. ALL FIRE ALARM CIRCUITS ARE TO BE IN CONDUIT, SURFACE RACEWAY OR OPEN RUN ABOVE THE CEILINGS, UNDER FLOORS AND IN WALLS IN A NEAT AND PROTECTED MANOR AS INDICATED ON THE DESIGN DOCUMENTS. EXPOSED CIRCUITS ARE ONLY PERMITTED WHEN NOTED AS EXPOSED ON DESIGN DOCUMENTS.
17. FIRE ALARM PANEL, REMOTES, AND COMPONENTS SHALL BE SECURED TO MOUNTING SURFACES PER MANUFACTURERS SPECIFICATIONS. NO DEVICE SHALL EXCEED THE WEIGHT OF 20 LBS. WITHOUT SPECIAL MOUNTING DETAILS.
18. A DEDICATED BRANCH CIRCUIT SHALL BE PROVIDED FOR FIRE ALARM EQUIPMENT. THIS CIRCUIT SHALL BE ENERGIZED FROM A COMMON USE AREA PANEL AND SHALL HAVE NO OTHER OUTLETS. THE BREAKER SHALL HAVE A RED LOCKING DEVICE TO BLOCK THE HANDLE IN THE "ON" POSITION. THE CIRCUIT BREAKER SHALL BE LABELED "FIRE ALARM CIRCUIT CONTROL". CIRCUIT ID TO BE LABELED AT FIRE PANEL/EXPANDERS.
19. THE INSTALLER CONTRACTOR SHALL PROVIDE A RECORD OF COMPLETION PER NFPA 72, FIGURE 10.18.2.1.1.
20. CONTROL PANELS, REMOTE ANNUNCIATORS SHALL BE MOUNTED WITH THE TOP OF THE CONTROL DEVICE OR KEYPAD TO BE A MAXIMUM OF 48".
21. THE INSTALLING CONTRACTOR SHALL PROVIDE SYSTEM PROGRAMMING FOR SUPERVISORY MONITORING PER CBC SECTION 901.6.2.
22. SUPERVISORY MONITORING SHALL BE TESTED AND VERIFIED AS SENDING CORRECT SIGNALS IN CONJUNCTION WITH FINAL ACCEPTANCE TEST.
23. OWNER SHALL BE RESPONSIBLE FOR ESTABLISHING A FIRE SYSTEM MONITORING CONTRACT OR PROVISIONS.
24. THE FIRE ALARM SYSTEM SHALL CONFORM TO 2022 CALIFORNIA ELECTRICAL CODE (CEC) ARTICLE 760 AND 2022 CALIFORNIA FIRE CODE (CFC) SECTION 907.
25. BEFORE REQUESTING FINAL APPROVAL OF THE INSTALLATION THE INSTALLING CONTRACTOR SHALL FURNISH A WRITTEN STATEMENT TO THE DSA PROJECT INSPECTOR TO THE EFFECT THAT THE SYSTEM HAS BEEN INSTALLED AND TESTED IN ACCORDANCE WITH THE 2019 NFPA 72 SECTION 14.4.1
26. UPON COMPLETION OF THE INSTALLATION OF THE FIRE ALARM SYSTEM, A SATISFACTORY TEST OF THE SYSTEM SHALL BE MADE IN THE PRESENCE OF THE DSA PROJECT INSPECTOR.
27. PROVIDE A RECORD OF COMPLETION PER NFPA 72 CHAPTER 7.5.6.
28. AUTOMATIC FIRE ALARM SYSTEM SHALL TRANSMIT THE ALARM, SUPERVISORY AND TROUBLE SIGNALS TO AN APPROVED SUPERVISING STATION AS REQUIRED BY NFPA 72 AND CBC 907.6.5.2. THE SUPERVISING STATION SHALL BE LISTED AS EITHER UUFX OR UUIS BY UL OR SHALL MEET THE REQUIREMENTS OF FM STANDARDS 3011.
29. TEST, INSPECTION AND MAINTENANCE SHALL COMPLY WITH NFPA 72 CHAPTER 14 REQUIREMENTS.
30. EACH BUILDING TO BE A SEPARATE SPEAKER ZONE. (CFC 907.63).

FIRE ALARM SYSTEM DESCRIPTION

SCOPE OF THIS PROJECT IS TO EXTEND EXISTING FIRE ALARM SYSTEM TO RELOCATED MODULAR BUILDING. PROVIDE NEW POWER SUPPLY, NOTIFICATION APPLIANCES, INITATION DEVICES, WIRING, AND BACK BOXES.

FIRE ALARM SYSTEM: CLASS B
IDC: CLASS B
SLC CIRCUIT: CLASS B
NOTIFICATION CIRCUIT: CLASS B

AGENCY APPROVAL DSA# XX-XXXXXXXXX

IDENTIFICATION STAMP
DIV. OF THE STATE ARCHITECT
APP: 02-122533 INC:
REVIEWED FOR
SS ☑ FLS ☑ ACS ☑
DATE: 05/22/2024

19·6
1715 R STREET, SUITE 200
SACRAMENTO, CA 95811
TEL (916) 786-8178

CONSULTANTS

CIVIL ENGINEER
WARREN CONSULTING ENGINEERING, INC.
1117 Windfield Way, Suite 110
El Dorado Hills, CA 95762
TEL (916)-985-1870

MECHANICAL ENGINEER
WESTON & ASSOCIATES MECHANICAL ENGINEERS, INC.
601 University Avenue, Suite 260
Sacramento, CA 95825
TEL (916)-482-0820

ELECTRICAL ENGINEER
THE ENGINEERING ENTERPRISE
1305 Marina Village Parkway
Alameda, CA 94501
TEL (530)-927-5793

BUILDING MANUFACTURER
AMERICAN MODULAR SYSTEMS
787 Spreckels Avenue
Manteca, CA 95336
TEL (209)-825-1921

The Engineering Enterprise
CONSULTING ENGINEERS
ALAMEDA | AUBURN | LOS ANGELES
NEOSHO | SAN DIEGO | SANTA BARBARA
https://www.engent.com

PROFESSIONAL STAMP
REGISTERED PROFESSIONAL ENGINEER #E015491 Exp. 06/30/25 SCOTT WHEELER ELECTRICAL STATE OF CALIFORNIA

REVISIONS

NO.	DATE	DESCRIPTION

THE ARCHITECT DOES NOT REPRESENT THAT THESE PLANS OR THE SPECIFICATIONS ARE SUITABLE FOR ANY SITE OTHER THAN THE ONE FOR WHICH THEY WERE SPECIFICALLY PREPARED. THE ARCHITECT DISCLAIMS RESPONSIBILITY FOR THESE PLANS AND SPECIFICATIONS IF THEY ARE USED IN WHOLE OR IN PART AT ANY OTHER SITE. WRITTEN DIMENSIONS ON THESE DRAWINGS SHALL HAVE PRECEDENCE OVER SCALED DIMENSIONS.

PROJECT OWNER & TITLE
GALT JOINT UNIION ELEMENTARY SCHOOL DISTRICT
1018 C Street, Suite 210
Galt, CA 95632

VERNON E. GREER ELEMENTARY SCHOOL RELOCATABLE BLGS
248 West A Street
Galt, CA 95632

SHEET TITLE
FIRE ALARM DETAILS, SCHEDULES & NOTES

DRAWN BY: TEE JOB NUMBER: 23544.01

SHEET NO.
E3.2

DATE: MAY 16, 2024

DATE PLOTTED: 4/5/2024 3:25:19 PM FILE LOCATION: C:\Users\bimhoff\Documents\BIM\23544.01_Greer ES New Relocatable Blgs_A24_bimhoffCZK8V.rvt

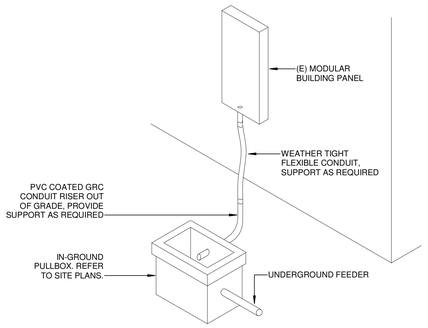

NOTE: COORDINATE PANEL LOCATION WITH EXISTING CONDITIONS FOR PLACEMENT OF IN-GROUND PULLBOX TO ENSURE MINIMAL ABOVE-GROUND RISER.

1 MODULAR BUILDING FEEDERS

SCALE: NTS

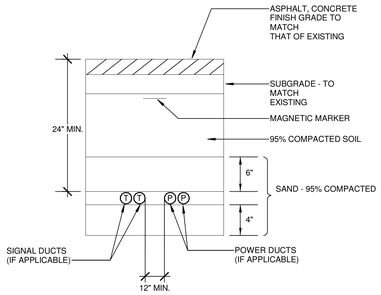

2 JOINT TRENCH

SCALE: NTS

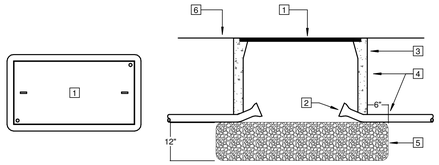

1. CONCRETE COVER (TO SUIT APPLICATION) WITH HOLD DOWN BOLTS. LABEL COVER AS REQUIRED.
2. BELL ENDS TYP.
3. PRE CAST REINFORCED CONCRETE BOX, SIZE PER CEC. INSTALL FLUSH WITH GRADE.
4. SEAL AROUND CONDUIT, BOX & JUNCTION OF EXTENSION(S) WITH MORTAR.
5. CRUSHED ROCK
6. FINISHED GRADE

3 SITE PULLBOX INSTALLATION DETAIL

SCALE: NTS

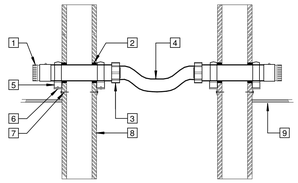

DETAIL NOTES:

1. PLASTIC BUSHING ON SET-SCREW CONNECTOR
2. CAULKING ACCORDING TO FIRE RATING, TYPICAL
3. WATER-TIGHT CONNECTORS IN ACCORDANCE WITH SPECIFICATIONS
4. WATER-TIGHT FLEXIBLE CONDUIT WITH ENOUGH SLACK TO ALLOW BUILDING TO MOVE 12" WITHOUT OVER STRESSING CONDUIT. REFER TO PLANS FOR CONDUIT SIZES AND QUANTITY.
5. CHANNEL STRUT BOLTED TO HEAVY ELL BRACKET
6. 3/8" X 1-1/2" MACHINE BOLT WITH WASHERS BOTH SIDES AND HEX NUT
7. 3/8" LAG SCREW, MIN. 2-1/2" EMBED
8. EXTERIOR OF BUILDING
9. DROP CEILING INSIDE BUILDING

4 CONDUIT PENETRATION BETWEEN PORTABLES

SCALE: NTS

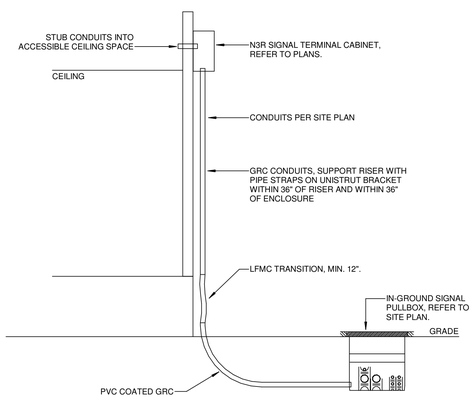

5 SIGNAL SYSTEM BUILDING CONNECTION

SCALE: NTS

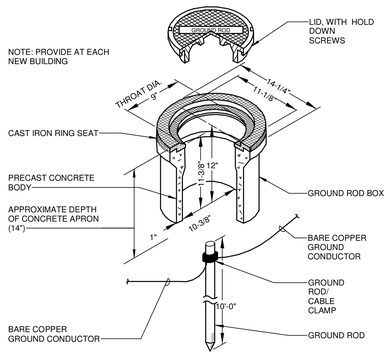

6 GROUND ROD INSTALLATION

SCALE: NTS

7 NOT USED

SCALE: NTS

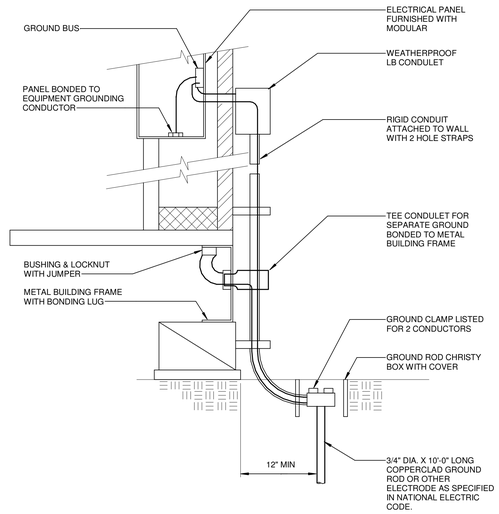

NOTES:

1. SIZE OF CONDUCTORS SHALL COMPLY WITH N.E.C. TABLE 250-66.
2. BOND SEPARATE CONDUCTORS FROM GROUND ROD TO GROUNDING POINT IN ELECTRICAL PANEL AND TO METAL BUILDING FRAME IF APPLICABLE. BOND THE ELECTRICAL GROUND TO THE METAL WATER PIPE EMBEDDED AT LEAST 10 FT. INTO THE SOIL (N.E.C. 250-52)
3. ALL MODULES OF METAL FRAME BUILDINGS SHALL BE ELECTRICALLY BONDED TOGETHER (BOLTING ONLY IS NOT ACCEPTABLE). USING #8 AWG CU.
4. CHECK RESISTANCE TO GROUND. IF RESISTANCE EXCEEDS 25 OHMS, INSTALL ADDITIONAL GROUND RODS WITH CONDUCTORS AS SHOWN, SEPARATED AT LEAST 6'-0" UNTIL RESISTANCE IS REDUCED TO 25 OHMS OR LESS (N.E.C. 250-53).
5. TESTS SHALL BE CONDUCTED IN THE PRESENCE OF THE PROJECT INSPECTOR.

8 TYP. GROUNDING FOR MODULAR CLASSROOMS

SCALE: NTS

AGENCY APPROVAL DSA# XX-XXXXXXXXX

IDENTIFICATION STAMP
DIV. OF THE STATE ARCHITECT
APP: 02-122533 INC:
REVIEWED FOR
SS ☑ FLS ☑ ACS ☑
DATE: 05/22/2024

196

1715 R STREET, SUITE 200
SACRMENTO, CA 95811
TEL (916) 786-8178

CONSULTANTS

CIVIL ENGINEER
WARREN CONSULTING ENGINEERING, INC.
1117 Windfield Way, Suite 110
El Dorado Hills, CA 95762
TEL (916)-985-1870

MECHANICAL ENGINEER
WESTON & ASSOCIATES MECHANICAL ENGINEERS, INC.
601 University Avenue, Suite 260
Sacramento, CA 95825
TEL (916)-482-0820

ELECTRICAL ENGINEER
THE ENGINEERING ENTERPRISE
1305 Marina Village Parkway
Alameda, CA 94501
TEL (530)-927-5793

BUILDING MANUFACTURER
AMERICAN MODULAR SYSTEMS
787 Spreckels Avenue
Manteca, CA 95336
TEL (209)-825-1921

The Engineering Enterprise
CONSULTING ENGINEERS
ALAMEDA | AUBURN | LOS ANGELES
NEOSHO | SAN DIEGO | SANTA BARBARA
https://www.engent.com

PROFESSIONAL STAMP

REGISTERED PROFESSIONAL ENGINEER
#E015145
Exp. 06-30-25
SCOTT WHEELER
ELECTRICAL
STATE OF CALIFORNIA

REVISIONS

NO.	DATE	DESCRIPTION

THE ARCHITECT DOES NOT REPRESENT THAT THESE PLANS OR THE SPECIFICATIONS ARE SUITABLE FOR ANY SITE OTHER THAN THE ONE FOR WHICH THEY WERE SPECIFICALLY PREPARED. THE ARCHITECT DISCLAIMS RESPONSIBILITY FOR THESE PLANS AND SPECIFICATIONS IF THEY ARE USED IN WHOLE OR IN PART AT ANY OTHER SITE. WRITTEN DIMENSIONS ON THESE DRAWINGS SHALL HAVE PRECEDENCE OVER SCALED DIMENSIONS.

PROJECT OWNER & TITLE

GALT JOINT UNIION ELEMENTARY SCHOOL DISTRICT
1018 C Street, Suite 210
Galt, CA 95632

VERNON E. GREER ELEMENTARY SCHOOL RELOCATABLE BLGS

248 West A Street
Galt, CA 95632

SHEET TITLE

ELECTRICAL DETAILS

DRAWN BY: TEE JOB NUMBER: 23544.01

SHEET NO.

E4.1

DATE: MAY 16, 2024

FILE LOCATION: C:\Users\bimhoff\Documents\BIM\23544.01_Greer ES New Relocatable Blgs_A24_bimhoffCZK8V.rvt
DATE PLOTTED: 4/5/2024 3:25:19 PM

MAX. FIXTURE UNIT LOADING FOR WASTE PIPE

NOMINAL PIPE SIZE (INCHES)	2"Ø	3"Ø	4"Ø	6"Ø
FIXTURE UNITS (VERTICAL)	16*	48	256	1380
FIXTURE UNITS (HORIZONTAL)	8*	35	216	720

NOTES:
1. PIPE SIZES TO BE PER CALIFORNIA PLUMBING CODE, TABLE 7-5.
2. SLOPE ALL HORIZONTAL WASTE PIPE AT 1/4" PER FOOT.

* EXCEPT SIX-UNIT TRAPS OR WATER CLOSETS.

MAX. FIXTURE UNIT LOADING FOR VENT PIPE

NOMINAL PIPE SIZE (INCHES)	2"Ø	3"Ø	4"Ø	6"Ø
FIXTURE UNITS (VERTICAL)	16*	48	256	1380
FIXTURE UNITS (HORIZONTAL)	8*	35	216	720

NOTES:
1. PIPE SIZES TO BE PER CALIFORNIA PLUMBING CODE, TABLE 7-5.
2. SLOPE ALL HORIZONTAL WASTE PIPE AT 1/4" PER FOOT.

MAX. FIXTURE UNIT LOADING FOR WATER PIPE

NOMINAL PIPE SIZE (INCHES)	3/4"Ø	1"Ø	1 1/4"Ø	1 1/2"Ø	2"Ø	2 1/2"Ø	3"Ø	4"Ø
FIXTURE UNITS (WITHOUT FLUSH VALVES)	6	10	21	34	127	245	431	875
FIXTURE UNITS (WITH 1 OR MORE FLUSH VALVES)	-	5	10	20	48	124	295	850

NOTES:
1. USE ABOVE DATA ONLY WHEN PIPE SIZES ARE NOT OTHERWISE SIZED ON THE DRAWINGS.
2. FIXTURE UNITS ARE AS LISTED FOR PUBLIC USE IN THE CALIFORNIA PLUMBING CODE.

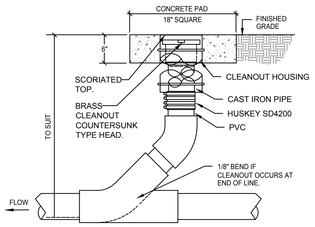

CLEANOUT TO GRADE

CLEANOUT DETAILS

NTS

2
P0.01

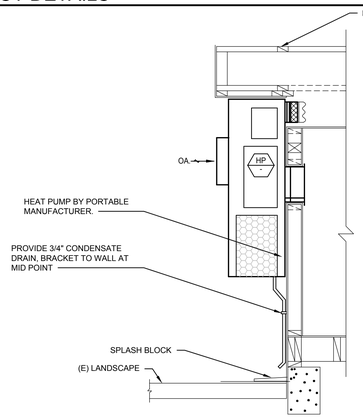

WALL HUNG HEAT PUMP DETAIL

NTS

1
P0.0.1

PLUMBING GENERAL NOTES

1. MECHANICAL AND PLUMBING DETAILS APPLY TO ALL BUILDINGS WHETHER REFERENCED OR NOT.
2. PROVIDE FIRE STOPPING ASSEMBLY PROTECTION FOR PIPE PENETRATIONS OF RATED ASSEMBLIES. FIRE STOP RATING SHALL MATCH RATED ASSEMBLY BEING PENETRATED.
3. PLUMBING AND FIRE SPRINKLER PIPING SHALL OFFSET OVER OR UNDER DUCTS. COORDINATE WITH HEATING CONTRACTOR.
4. PLUMBING CONTRACTOR TO OFFSET PIPING AROUND SKYLIGHTS.
5. PLUMBING CONTRACTOR TO OFFSET PIPING AROUND ROOF ACCESS LADDERS.
6. PIPING SHALL NOT PENETRATE INTO, OVER, OR THROUGH IT CLOSETS OR ELECTRICAL ROOMS UNLESS IT SERVES THAT SPECIFIC ROOM.
7. DRAWINGS SHALL BE CONSIDERED DIAGRAMMATIC IN NATURE AND ARE NOT INTENDED TO SHOW EVERY OFFSET, FITTING, OR STRUCTURAL DIFFICULTY THAT MAY BE ENCOUNTERED DURING INSTALLATION OF WORK. THE CONTRACTORS SHALL COORDINATE LOCATION OF ALL PLUMBING PIPING WITH ALL OTHER TRADES ON THIS PROJECT. LOCATION OF ALL ITEMS NOT DEFINITELY FIXED BY DIMENSIONS ARE APPROXIMATE ONLY. EXACT LOCATIONS NECESSARY TO SECURE BEST CONDITIONS AND RESULTS MUST BE DETERMINED AT THE JOB SITE AND SHALL HAVE THE APPROVAL OF THE ARCHITECT BEFORE BEING INSTALLED.
8. ALL VALVES SHALL BE FULL LINE SIZES UNLESS NOTED OTHERWISE.
9. PROVIDE WALL CLEANOUT AT ALL SINKS, LAVATORIES, AND URINALS.
10. PIPING SHALL BE SUPPORTED IN ACCORDANCE TO SMACNA "GUIDELINES FOR SEISMIC RESTRAINTS OF MECHANICAL AND PLUMBING PIPING SYSTEMS".
11. ALL NEW SANITARY WASTE PIPING SHALL HAVE A MINIMUM BURRY DEPTH OF 18" AND BE SLOPED AT 1/4" PER FOOT MINIMUM UNLESS OTHERWISE NOTED. PIPING SHALL BE UNIFORMLY SLOPPED BETWEEN UPPER TERMINAL OF PIPE AND THE POINT OF CONNECTION TO THE SITE PIPING (AS INDICATED ON CIVIL PLANS) TO ACHIEVE MAXIMUM SLOPE POSSIBLE.
12. ACCESS PANELS SHALL BE PROVIDED AS NECESSARY TO PROPERLY ACCESS THE PLUMBING SYSTEM INCLUDING VALVES, EQUIPMENT, HOPPER DRAINS, AND INDIRECT DRAINS IN WALLS.
13. HVAC EQUIPMENT IS SHOWN FOR THE COORDINATION OF UTILITIES ONLY. REFER TO "M" SHEETS FOR ADDITIONAL INFORMAITON.
14. PROVIDE WATER HAMMER ARRESTORS (WHA) AT ALL FIXTURES AS INDICATED IN THE SPECIFICAITONS/NOTES. WHA SHALL BE SIZED AND PER THE PLUMBING & DRAINAGE INSTITUTE (PDI). WHA SHALL BE INSTALLED IN WALLS (NOT ABOVE CEILINGS).
15. REFERENCE ARCHITECTURAL DRAWINGS FOR BUILDING DIMENSIONS, EXACT LOCATIONS OF PLUMBING FIXTURES, AND PLUMBING FIXTURE MOUNTING HEIGHTS.
16. CONCEAL ALL PIPING IN WALL FURRINGS, PARTITIONS, ABOVE CEILINGS, EXCEPT IN MECHANICAL ROOMS OR WHERE NOTED OTHERWISE.
17. PROVIDE A TRAP PRIMER AT ALL FLOOR DRAINS AND FLOOR SINKS.

APPLICABLE CODES

ALL WORK PERFORMED UNDER THIS CONTRACT IS TO CONFIRM TO THE FOLLOWING CODES AND REGULATIONS:

1. CALIFORNIA CODE OF REGULATIONS - TITLE 24
2. CALIFORNIA BUILDING CODE, 2022
3. CALIFORNIA MECHANICAL CODE, 2022
4. CALIFORNIA PLUMBING CODE, 2022
5. CALIFORNIA FIRE CODE, 2022
6. CALIFORNIA ELECTRICAL CODE, 2022
7. CALIFORNIA BUILDING ENERGY EFFICIENCY STANDARDS, 2022

THE ABOVE CODES AND REGULATIONS REFER TO THE LATEST EDITION OR REVISION IF FORCE ON THE DATE OF THE CONTRACT, UNLESS OTHERWISE STATED. NOTHING ON THE DRAWINGS IS TO BE CONSTRUED AS REQUIRING OR PERMITTING WORK THAT IS CONTRARY TO THE LISTED CODES AND REGULATIONS, OR OTHER LOCAL, STATE OR FEDERAL CODES OR REGULATIONS WHICH MAY BE APPLICABLE.

ANCHORAGE / BRACING NOTES

ALL MECHANICAL AND PLUMBING COMPONENTS SHALL BE ANCHORED AND INSTALLED PER THE DETAILS ON THE DSA APPROVED CONTRACT DOCUMENTS. WHERE NO DETAIL IS INDICATED, THE FOLLOWING COMPONENTS SHALL BE ANCHORED OR BRACED TO MEET THE FORCE AND DISPLACEMENT REQUIREMENTS PRESCRIBED IN THE 2022CBC, SECTION 1617A.1.18 THROUGH 1617A.1.26 AND ASCE 7-16, CHAPTERS 13, 26 AND 30:

1. ALL PERMANENT EQUIPMENT AND COMPONENTS.
2. TEMPORARY, MOVABLE OR MOBILE EQUIPEMENT THAT IS PERMANENTLY ATTACHED (E.G. HARD WIRED) TO THE BUILDING UTILITY SERVICES SUCH AS ELECTRICITY, GAS, OR WATER. "PERMANENTLY ATTACHED" SHALL INCLUDE ALL ELECTRICAL CONNECTION EXCEPT PLUGS FOR 110/220 VOLT RECEPTACLES HAVING A FLEXIBLE CABLE.
3. TEMPORARY, MOVABLE OR MOBILE EQUIPMENT WHICH IS HEAVIER THAN 400 POUNDS OR HAS A CENTER OF MASS LOCATED 4 FEET OR MORE ABOVE THE ADJACENT FLOOR OR ROOF LEVEL THAT DIRECTLY SUPPORT THE COMPONET IS REQUIRED TO BE RESTRAINED IN A MANNER APPROVED BY DSA.
4. MOVABLE EQUIPMENT WHICH IS STATIONED IN ONE PLACE FOR MORE THAN 8 HOURS AND HEAVIER THAN 400 POUNDS OR HAS A CENTER MASS LOCATED 4 FEET OR MORE ABOVE THE ADJACENT FLOOR OR ROOF LEVEL THAT DIRECTLY SUPPORT THE COMPONENT ARE REQUIRED TO BE ANCHORED WITH TEMPORARY ATTACHMENTS.

THE FOLLOWING MECHANICAL COMPONENTS SHALL BE POSITIVELY ATTACHED TO THE STRUCTURE BUT NEED NOT DEMONSTRATE DESIGN COMPLIANCE WITH THE REFERENCES NOTED ABOVE. THESE COMPONENTS SHALL HAVE FLEXIBLE CONNECTIONS PROVIDED BETWEEN THE COMPONENT AND ASSOCIATED DUCTWORK AND PIPING. FLEXIBLE CONNECTION MUST ALLOW MOVEMENT IN BOTH TRANSVERSE AND LONGITUDINAL DIRECTIONS:

A. COMPONENTS WEIGHING LESS THAN 400 POUNDS AND HAVING A CENTER OF MASS LOCATED 4 FEET OR LESS ABOVE THE ADJACENT FLOOR OR ROOF LEVEL THAT DIRECTLY SUPPORT THE COMPONENT.
B. COMPONENTS WEIGHING LESS THAN 20 POUNDS, OR IN THE CASE OF DISTRIBUTED SYSTEMS, LESS THAN 5 POUNDS PER FOOT, WHICH ARE SUSPENDED FROM A ROOF OR FLOOR OR HUNG FROM A WALL.

THE ANCHORAGE OF ALL MECHANICAL AND PLUMBING COMPONENTS SHALL BE SUBJECT TO THE APPROVAL OF THE DESIGN PROFESSIONAL IN GENERAL RESPONSIBLE CHARGE OR STRUCTURAL ENGINEER DELEGATED RESPONSIBILITY AND ACCEPTANCE BY DSA. THE PROJECT INSPECTOR WILL VERIFY THAT ALL COMPONENTS AND EQUIPMENT HAVE BEEN ANCHORED IN ACCORDANCE WITH THE ABOVE REQUIREMENTS.

PIPING AND DUCTWORK SYSTEM BRACING NOTE:
PIPING AND DUCTWORK SHALL BE BRACED TO COMPLY THE FORCE AND DISPLACEMENTS PRESCRIBED IN ASCE 7-16 SECTION 13.3 AS DEFINED IN ASCE 7-16 SECTION 13.6.5, 13.6.6, 13.6.7, 13.6.8; AND 2022 CBC, SECTIONS 1617A.1.24, 1617A.1.25, AND 1617A.1.26.

THE METHOD OF SHOWING BRACING AND ATTACHMENT TO THE STRUCTURE FOR THE IDENTIFIED DISTRIBUTION SYSTEM ARE AS NOTED BELOW. WHEN BRACING AND ATTACHMENTS ARE BASED ON A PRE APPROVED INSTALLATION GUIDE (E.G. SMACNA OR OSHPD OPM), COPIES OF THE BRACING SYSTEM INSTALLATION GUIDE OR MANUAL SHALL BE AVAILABLE ON THE JOBSITE PRIOR TO THE START OF AND DURING THE HANGING AND BRACING OF THE DISTRIBUTION SYSTEMS. THE STRUCTURAL ENGINEER OF RECORD SHALL VERIFY THE ADEQUACY OF THE STRUCTURE TO SUPPORT THE HANGER AND BRACE LOADS.

PLUMBING PIPING (PP),
_ PP - OPTION 1:
DETAILED ON THE APPROVED DRAWINGS WITH PROJECT SPECIFIC NOTED AND DETAILS.

X PP - OPTION 2:
SHALL COMPLY WITH THE APPLICABLE OSHPD PRE-APPROVAL (OPM#), MASON OPM-0043-13 SEISMIC RESTRAINT SYSTEMS GUIDELINE.

PLUMBING LEGEND

ABBREVIATIONS

ABC	ABOVE CEILING	FT	FEET	PRV	PRESSURE REDUCING VALVE
AD	ACCESS DOOR	FU	FIXTURE UNITS	PS	PRESSURE SWITCH
AFF	ABOVE FINISHED FLOOR	G	NATURAL GAS	PSI	POUNDS PER SQUARE INCH
AFG	ABOVE FINISHED GRADE	GCO	GRADE CLEAN OUT	PSIG	POUNDS PER SQUARE INCH GAUGE
AP	ACCESS PANEL	GD	GARBAGE DISPOSER	PT	PLUGGED TEE
AQ	AQUASTAT	GLV	GLOBE VALUE	R	RISE / RISER
ARCH	ARCHITECT	GM	GAS METER	RD	ROOF DRAIN
AV	ACID VENT	GPH	GALLONS PER HOUR	RET	RETURN
AVTR	ACID VENT THRU ROOF	GPM	GALLONS PER MINUTE	RIO	ROUGH IN ONLY
AW	ACID WASTE	GPR	GAS PRESSURE REGULATOR	RM	ROOM
BFF	BELOW FINISHED FLOOR	GSCK	GAS COCK	RO	REVERSE OSMOSIS WATER
BFP	BACKFLOW PREVENTER	GSV	GAS SEISMIC VALVE	RV	RELIEF VALVE
BFV	BUTTERFLY VALVE	GV	GATE VALVE	RWL	RAINWATER LEADER
BG	BELOW GRADE	GW	GREASE WASTE PIPING	SCD	SECONDARY CONDENSATE DRAIN
BLV	BALL VALVE	HB	HOSE BIBB	SCH	SCHEDULE
CA	COMPRESSED AIR	HD	HOPPER DRAIN	SCW	COLD SOFT WATER
CAP	CAPACITY	HPG	HIGH PRESSURE NATURAL GAS	SD	STORM DRAIN
CB	CATCH BASIN	HW	DOMESTIC HOT WATER	SH	SHOWER
CBV	CALIBRATED BALANCE VALVE	HWR	DOMESTIC HOT WATER RETURN	SHT	SHEET
CD	CONDENSATE DRAIN	ICW	INDUSTRIAL COLD WATER	SHW	HOT SOFT WATER
CFH	CUBIC FEET PER HOUR	IHW	INDUSTRIAL HOT WATER	SHWR	HOT SOFT WATER RETURN
CI	CAST IRON	IHWR	INDUSTRIAL HOT WATER RETURN	SK	SINK
CKV	CHECK VALUE	ID	INSIDE DIAMETER	SMS	SHEET METAL SCREW
CL	CENTER LINE	IE	INVERT ELEVATION	SOV	SHUT OFF VALVE
CLG	CEILING	IW	INDIRECT WASTE	SS	STAINLESS STEEL
CMP	CORRUGATED METAL PIPE	LA	LABORATORY AIR	STD	STANDARD
CO	CLEANOUT	LAV	LAVATORY	STR	STRAINER
CO2	CARBON DIOXIDE	LBS	POUNDS	TA	TO ABOVE
COP	CAP ON END OF PIPE	LG	LABORATORY GAS	TB	TO BELOW
COTF	CLEANOUT TO FLOOR	LP	LOW PRESSURE	TEMP.	TEMPERATURE
COTG	CLEANOUT TO GRADE	LWT	LEAVING WATER TEMPERATURE	TH	THERMOMETER
CP	CIRCULATING PUMP	MA	MEDICAL AIR	TMV	THERMOSTATIC MIXING VALVE
CR	CONCENTRIC REDUCER	MAX	MAXIMUM	TP	TRAP PRIMER
CSK	CLINIC SINK	MFR	MANUFACTURER	TYP	TYPICAL
CV	CONTROL VALVE	MGC	MEDICAL GAS COLUMN	TW	TEMPERED WATER
CW	DOMESTIC COLD WATER	MIN	MINIMUM	UC	UNDER COUNTER
D	DROP	MISC	MISCELLANEOUS	UF	UNDER FLOOR
DCW	DOMESTIC COLD WATER	MPG	MEDIUM PRESSURE NATURAL GAS	UG	UNDERGROUND
DD	DECK DRAIN	(N)	NEW	UN	UNION OR FLANGE
DET	DETAIL	N2	NITROGEN	UNO	UNLESS NOTED OTHERWISE
DF	DRINKING FOUNTAIN	N2O	NITROUS OXIDE	UR	URINAL
DHW	DOMESTIC HOT WATER	NC	NORMALLY CLOSED	V	SANITARY VENT
DHWR	DOMESTIC HOT WATER RETURN	NIC	NOT IN CONTRACT	VB	VALVE BOX
DI	DEIONIZED WATER	NO	NORMALLY OPEN	VAC	MEDICAL VACUUM
DN	DOWN	NTS	NOT TO SCALE	VR	VENT RISER
DWG	DRAWING	O2	OXYGEN	VTR	VENT THRU ROOF
(E)	EXISTING	OC	ON CENTER	W	SANITARY WASTE
EWH	ELECTRIC WATER HEATER	OFCI	OWNER FURNISHED CONTRACTOR INSTALLED	WD	WASTE DROP
EWT	ENTERING WATER TEMPERATURE	ORD	OVERFLOW ROOF DRAIN	w/	WITH
FA	FROM ABOVE	ORWL	OVERFLOW RAIN WATER LEADER	W/O	WITHOUT
FB	FROM BELOW	OH	OVERHEAD	WAGD	WASTE ANESTHESIA GAS DISPOSAL
FC	FLEXIBLE CONNECTION	PATRV	PRESSURE & TEMPERATURE RELIEF VALVE PIPING	WC	WATER CLOSET
FCO	FLOOR CLEAN OUT	P/L	PROPERTY LINE	WCO	WALL CLEAN OUT
FD	FLOOR DRAIN	PAN	PIPE ANCHOR	WD	WASTE DROP
FHC	FIRE HOSE RACK & CABINET	PG	PRESSURE GAUGE	WH	WALL HYDRANT
FLR	FLOOR	PL	PLATE	WHA	WATER HAMMER ARRESTER
FPM	FEET PER MINUTE	PLBG	PLUMBING	WM	WATER METER
FSH	FIRE SPRINKLER HEAD	POC	POINT OF CONNECTION	WSP	WET STANDPIPE
FS	FLOOR SINK	POD	POINT OF DISCONNECT		
FSP	FIRE SPRINKLER PIPE				

SYMBOLS

	DOMESTIC COLD WATER LINE		GATE VALVE
	SOIL OR WASTE LINE BELOW GRADE	Ø	DIAMETER
	RISER UP (ELBOW)	COTG	CLEANOUT TO GRADE
		ROOM NAME / #	ROOM NAME AND NUMBER

AGENCY APPROVAL DSA# 02-122533

IDENTIFICATION STAMP
DIV. OF THE STATE ARCHITECT
APP: 02-122533 INC:
REVIEWED FOR
SS ☑ FLS ☑ ACS ☑
DATE: 05/22/2024

196

1715 R STREET, SUITE 200
SACRMENTO, CA 95811
TEL (916) 786-8178

CONSULTANTS

WESTON & ASSOCIATES MECHANICAL ENGINEERS
WESTON & ASSOCIATES #24-018

MECHANICAL ENGINEER
WESTON & ASSOCIATES MECHANICAL ENGINEERS, INC.
601 University Avenue, Suite 260
Sacramento, CA 95825
TEL (916)-482-0820

ELECTRICAL ENGINEER
THE ENGINEERING ENTERPRISE
1305 Marina Village Parkway
Alameda, CA 94501
TEL (530)-927-5793

BUILDING MANUFACTURER
AMERICAN MODULAR SYSTEMS
787 Spreckels Avenue
Manteca, CA 95336
TEL (209)-825-1921

CIVIL ENGINEER
WARREN CONSULTING ENGINEERING, INC.
1117 Windfield Way, Suite 110
El Dorado Hills, CA 95762
TEL (916)-985-1870

PROFESSIONAL STAMP

REGISTERED PROFESSIONAL ENGINEER
ADAM C. DAVIS
M 34869
EXPIRES 06/30/24
MECHANICAL
STATE OF CALIFORNIA

# NO.	DATE	DESCRIPTION

THE ARCHITECT DOES NOT REPRESENT THAT THESE PLANS OR THE SPECIFICATIONS ARE SUITABLE FOR ANY SITE OTHER THAN THE ONE FOR WHICH THEY WERE SPECIFICALLY PREPARED. THE ARCHITECT DISCLAIMS RESPONSIBILITY FOR THESE PLANS AND SPECIFICATIONS IF THEY ARE USED IN WHOLE OR IN PART AT ANY OTHER SITE. WRITTEN DIMENSIONS ON THESE DRAWINGS SHALL HAVE PRECEDENCE OVER SCALED DIMENSIONS.

PROJECT OWNER & TITLE

GALT JOINT UNIION ELEMENTARY SCHOOL DISTRICT

1018 C Street, Suite 210
Galt, CA 95632

VERNON E. GREER ELEMENTARY SCHOOL RELOCATABLE BLGS

248 West A Street
Galt, CA 95632

SHEET TITLE

PLUMBING LEGENDS SCHEDULES AND NOTES

DRAWN BY: AD JOB NUMBER: 23544.01

SHEET NO.

P-001

DATE: MAY 15, 2024

CONSTRUCTION DOCUMENTS

DATE PLOTTED: 4/5/2024 3:25:19 PM FILE LOCATION: C:\Users\bimhoff\Documents\BIM\23544.01_Greer ES New Relocatable Blgs_A24_bimhoffCZK8V.rvt

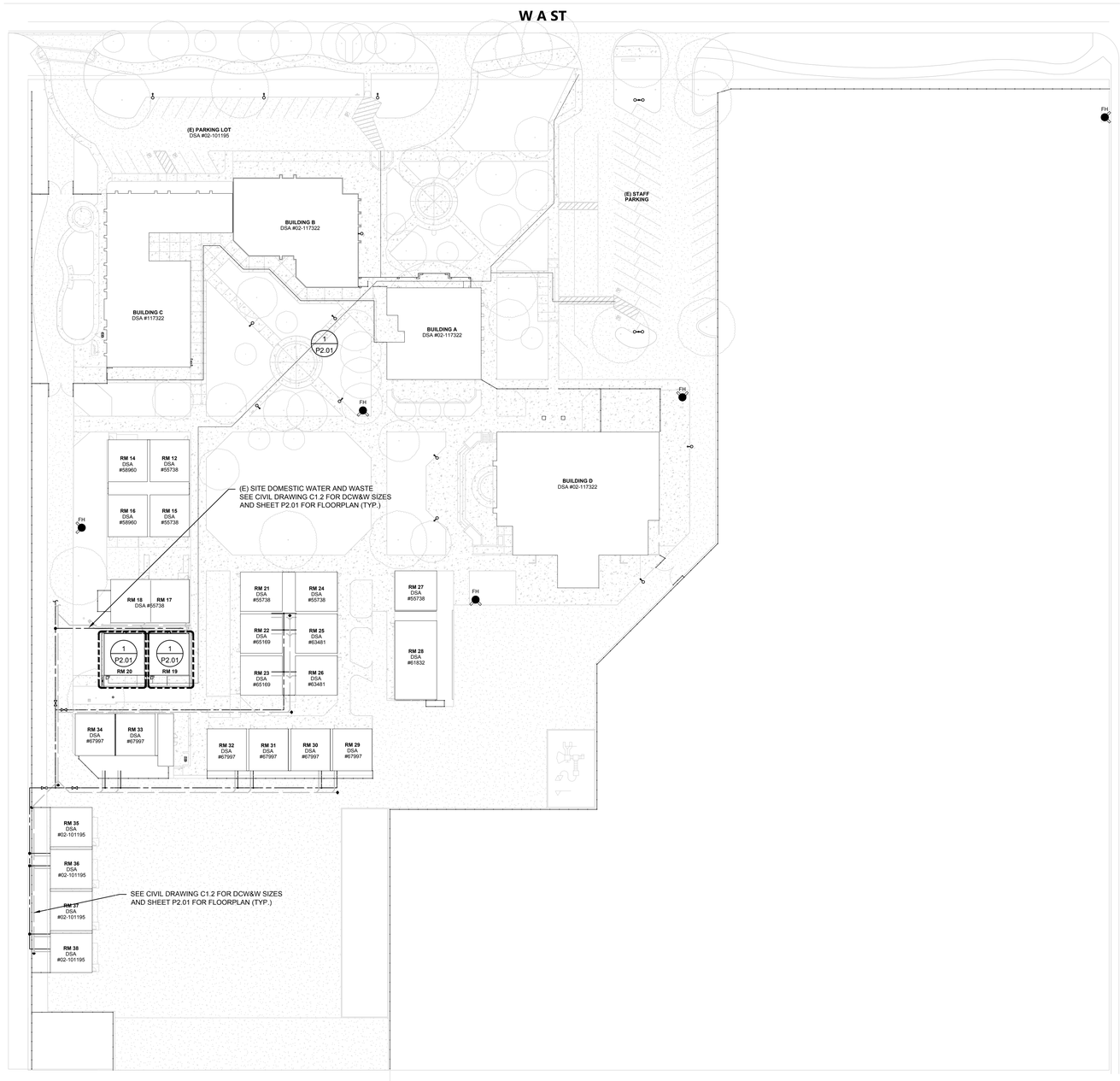

PLUMBING - SITE PLAN

SCALE: 1"=40'-0"

1
P1.01

N

AGENCY APPROVAL DSA# 02-122533

IDENTIFICATION STAMP
DIV. OF THE STATE ARCHITECT
APP: 02-122533 INC:
REVIEWED FOR
SS ☑ FLS ☑ ACS ☑
DATE: 05/22/2024

196

1715 R STREET, SUITE 200
SACRMENTO, CA 95811
TEL (916) 786-8178

CONSULTANTS

WESTON & ASSOCIATES MECHANICAL ENGINEERS

WESTON & ASSOCIATES #24-018

MECHANICAL ENGINEER
WESTON & ASSOCIATES MECHANICAL ENGINEERS, INC.
601 University Avenue, Suite 260
Sacramento, CA 95825
TEL (916)-482-0820

ELECTRICAL ENGINEER
THE ENGINEERING ENTERPRISE
1305 Marina Village Parkway
Alameda, CA 94501
TEL (530)-927-5793

BUILDING MANUFACTURER
AMERICAN MODULAR SYSTEMS
787 Spreckels Avenue
Manteca, CA 95336
TEL (209)-825-1921

CIVIL ENGINEER
WARREN CONSULTING ENGINEERING, INC.
1117 Windfield Way, Suite 110
El Dorado Hills, CA 95762
TEL (916)-985-1870

PROFESSIONAL STAMP

REGISTERED PROFESSIONAL ENGINEER
ADAM C. DAVIS
M 34869
EXPIRES 06/30/25
MECHANICAL
STATE OF CALIFORNIA

# NO.	DATE	DESCRIPTION

THE ARCHITECT DOES NOT REPRESENT THAT THESE PLANS OR THE SPECIFICATIONS ARE SUITABLE FOR ANY SITE OTHER THAN THE ONE FOR WHICH THEY WERE SPECIFICALLY PREPARED. THE ARCHITECT DISCLAIMS RESPONSIBILITY FOR THESE PLANS AND SPECIFICATIONS IF THEY ARE USED IN WHOLE OR IN PART AT ANY OTHER SITE. WRITTEN DIMENSIONS ON THESE DRAWINGS SHALL HAVE PRECEDENCE OVER SCALED DIMENSIONS.

PROJECT OWNER & TITLE

GALT JOINT UNIION ELEMENTARY SCHOOL DISTRICT

1018 C Street, Suite 210
Galt, CA 95632

VERNON E. GREER ELEMENTARY SCHOOL RELOCATABLE BLGS

248 West A Street
Galt, CA 95632

SHEET TITLE

PLUMBING SITE PLAN

DRAWN BY: AD JOB NUMBER: 23544.01

SHEET NO.

P-101

DATE: MAY 15, 2024

CONSTRUCTION DOCUMENTS

DATE PLOTTED: 4/5/2024 3:25:19 PM FILE LOCATION: C:\Users\bimhoff\Documents\BIM\23544.01_Greer ES New Relocatable Blgs_A24_bimhoffCZK8V.rvt

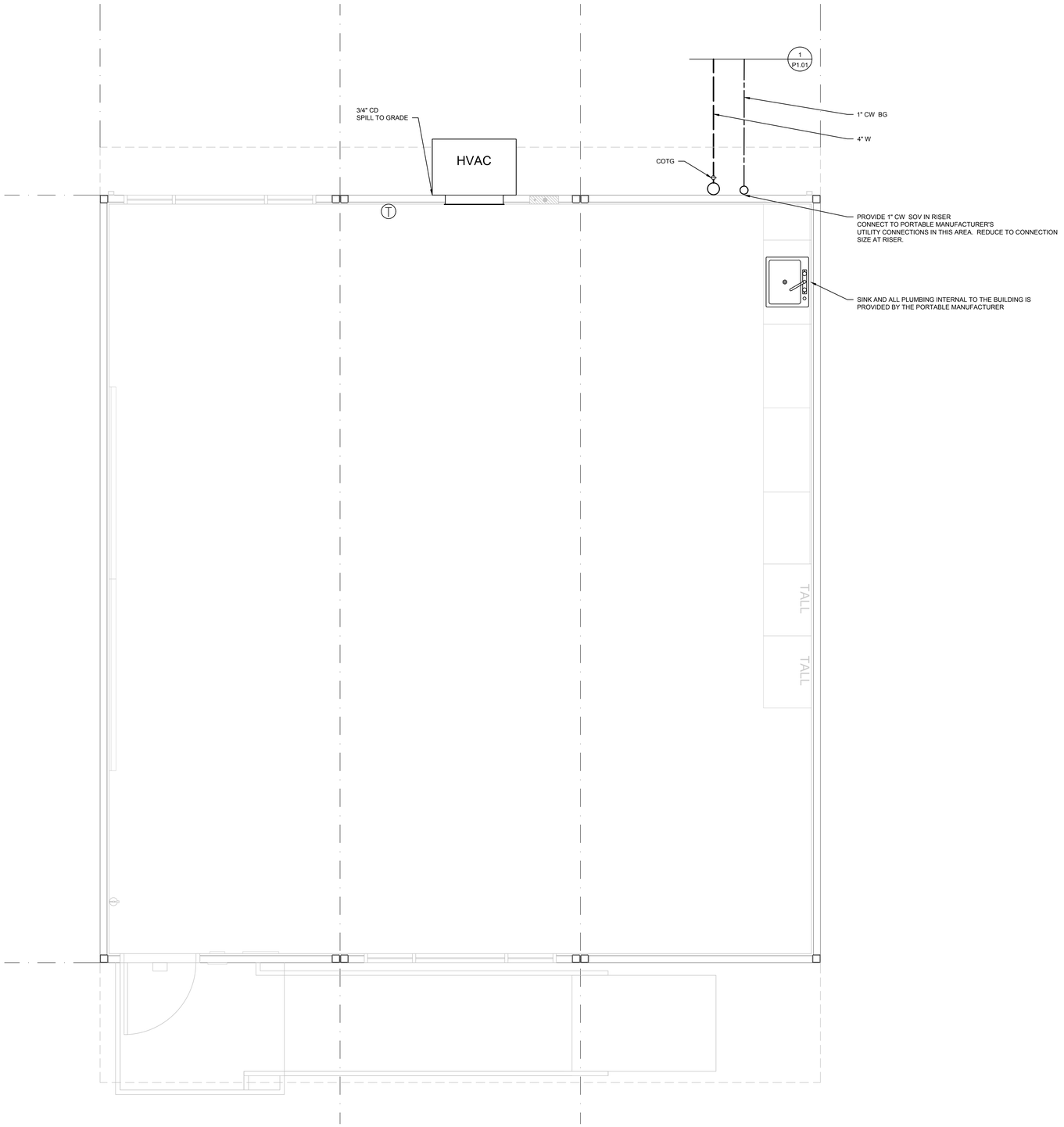

NOTES:

4" W BELOW GRADE
TRANSITION TO 2" W AT WASTE
RISER EXTERIOR TO THETHE BUILDING.

1" CW BELOW GRADE. PROVIDE SHUT OFF
VALVE AT EXTERIOR RISER OF BUILDING.
TRANSITION TO BUILDING CONNECTION SIZE
DOWNSTREAM OF VALVE.

PLUMBING FLOOR PLANS

SCALE: 1/2"=1'-0"

1
P2.01

AGENCY APPROVAL DSA# 02-122533

IDENTIFICATION STAMP
DIV. OF THE STATE ARCHITECT
APP: 02-122533 INC:
REVIEWED FOR
SS ☑ FLS ☑ ACS ☑
DATE: 05/22/2024

196

1715 R STREET, SUITE 200
SACRMENTO, CA 95811
TEL (916) 786-8178

CONSULTANTS

WESTON & ASSOCIATES
MECHANICAL ENGINEERS
WESTON & ASSOCIATES #24-018

MECHANICAL ENGINEER
WESTON & ASSOCIATES MECHANICAL ENGINEERS, INC.
601 University Avenue, Suite 260
Sacramento, CA 95825
TEL (916)-482-0820

ELECTRICAL ENGINEER
THE ENGINEERING ENTERPRISE
1305 Marina Village Parkway
Alameda, CA 94501
TEL (530)-927-5793

BUILDING MANUFACTURER
AMERICAN MODULAR SYSTEMS
787 Spreckels Avenue
Manteca, CA 95336
TEL (209)-825-1921

CIVIL ENGINEER
WARREN CONSULTING ENGINEERING, INC.
1117 Windfield Way, Suite 110
El Dorado Hills, CA 95762
TEL (916)-985-1870

PROFESSIONAL STAMP

REGISTERED PROFESSIONAL ENGINEER
ADAM C. DAVIS
M 34869
EXPIRES 06/30/24
MECHANICAL
STATE OF CALIFORNIA

NO.	DATE	DESCRIPTION

THE ARCHITECT DOES NOT REPRESENT THAT THESE PLANS OR THE SPECIFICATIONS ARE SUITABLE FOR ANY SITE OTHER THAN THE ONE FOR WHICH THEY WERE SPECIFICALLY PREPARED. THE ARCHITECT DISCLAIMS RESPONSIBILITY FOR THESE PLANS AND SPECIFICATIONS IF THEY ARE USED IN WHOLE OR IN PART AT ANY OTHER SITE. WRITTEN DIMENSIONS ON THESE DRAWINGS SHALL HAVE PRECEDENCE OVER SCALED DIMENSIONS.

PROJECT OWNER & TITLE

GALT JOINT UNIION ELEMENTARY SCHOOL DISTRICT

1018 C Street, Suite 210
Galt, CA 95632

VERNON E. GREER ELEMENTARY SCHOOL RELOCATABLE BLGS

248 West A Street
Galt, CA 95632

SHEET TITLE

PLUMBING FLOOR PLAN

DRAWN BY: AD JOB NUMBER: 23544.01

SHEET NO.

P-201

DATE: MAY 15, 2024

CONSTRUCTION DOCUMENTS

DATE PLOTTED: 4/5/2024 3:25:19 PM FILE LOCATION: C:\Users\bimhof\Documents\BIM\23544.01_Greer ES New Relocatable Blgs_A24_bimhofCZK8V.rvt

American Modular Systems

VERNON GREER ES
(2) 30' x 32' BUILDINGS

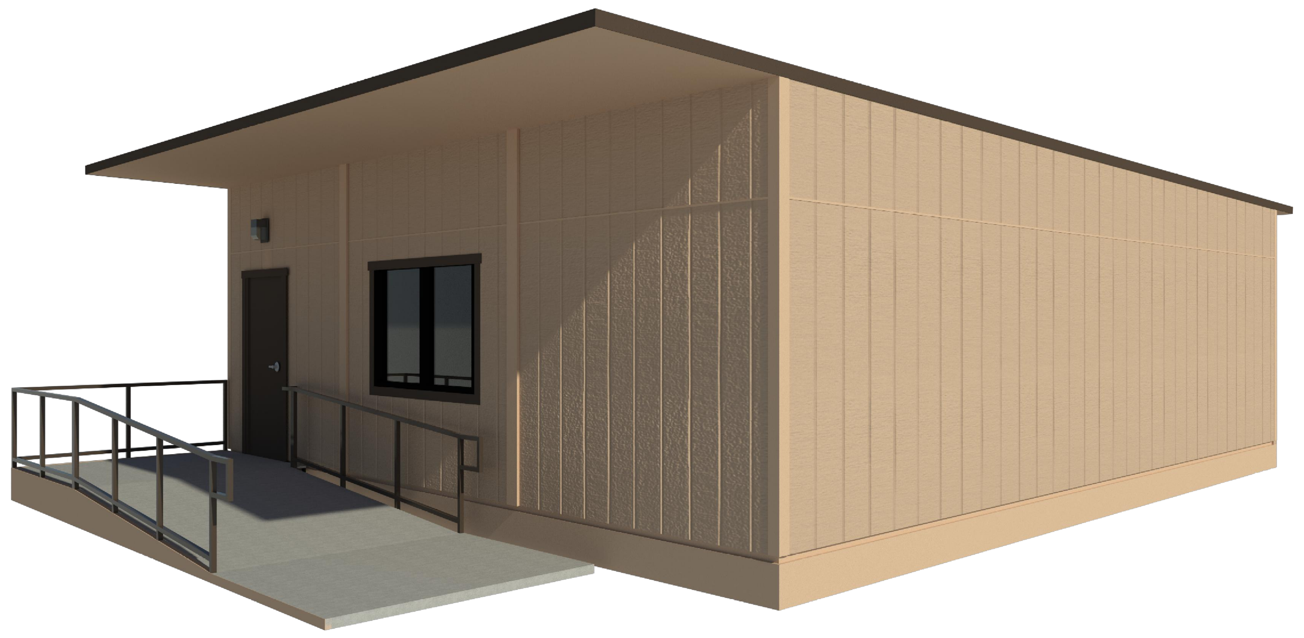

APPLICABLE CODES

PARTIAL LIST OF APPLICABLE CODES AS OF JANUARY 1, 2023

- 2022 CALIFORNIA ADMINISTRATIVE CODE (CAC) - PART 1, TITLE 24, CCR)
- 2022 CALIFORNIA BUILDING CODE (CBC), VOLUME 1 & 2 - (PART 2, TITLE 24 CCR) BASED ON THE 2021 INTERNATIONAL BUILDING CODE WITH 2022 CALIFORNIA AMENDMENTS
- 2022 CALIFORNIA ELECTRICAL CODE (CEC) - (PART 3, TITLE 24, CCR) BASED ON THE 2020 NATIONAL ELECTRIC CODE WITH 2022 CALIFORNIA AMENDMENTS
- 2022 CALIFORNIA MECHANICAL CODE (CMC) - (PART 4, TITLE 24, CCR) BASED ON THE 2021 IAPMO UNIFORM MECHANICAL CODE WITH 2022 CALIFORNIA AMENDMENTS
- 2022 CALIFORNIA PLUMBING CODE (CPC) - (PART 5, TITLE 24, CCR) BASED ON THE 2021 IAPMO UNIFORM PLUMBING CODE WITH 2022 CALIFORNIA AMENDMENTS
- 2022 CALIFORNIA ENERGY CODE (CEC) - (PART 6, TITLE 24, CCR)
- 2022 CALIFORNIA FIRE CODE (CFC) - (PART 9, TITLE 24, CCR) BASED ON THE 2021 INTERNATIONAL FIRE CODE WITH 2022 CALIFORNIA AMENDMENTS
- 2022 CALIFORNIA GREEN BUILDING CODE (CGC) - (PART 11, TITLE 24, CCR)
- 2022 CALIFORNIA REFERENCED STANDARDS CODE (PART 12, TITLE 24, CCR)

PARTIAL LIST OF APPLICABLE STANDARDS

NFPA 13	AUTOMATIC SPRINKLER SYSTEM	2022 EDITION
NFPA 14	STANDPIPE AND HOSE SYSTEMS	2019 EDITION
NFPA 17	DRY CHEMICAL EXTINGUISHING SYSTEMS	2021 EDITION
NFPA 17A	WET CHEMICAL EXTINGUISHING SYSTEMS	2021 EDITION
NFPA 20	STATIONARY PUMPS	2019 EDITION
NFPA 24	PRIVATE FIRE MAINS	2019 EDITION
NFPA 72	NATIONAL FIRE ALARM AND SIGNALING CODE (CALIFORNIA AMENDED) (NOTE: SEE UL, STANDARD 1971 FOR "VISUAL DEVICES")	2022 EDITION
NFPA 253	CRITICAL RADIANT FLUX OF FLOOR COVERING SYSTEMS	2019 EDITION
NFPA 2001	CLEAN AGENT FIRE EXTINGUISHING SYSTEMS (CA AMMENDED)	2018 EDITION

GENERAL NOTES

1. SUBSTITUTION OF PRODUCTS OR PROCESSES WHICH CHANGE THE STRUCTURAL SAFETY, FIRE & LIFE-SAFETY, OR ACCESSIBILTY OF THIS BUILDING SHALL BE SUBMITTED TO THE DSA AS AN ADDENDUM OR CONSTRUCTION CHANGE DOCUMENT.
2. PC BUILDING APPROVED ONLY FOR OCCUPANCY "E" OR "B".
3. PC BUILDING EXITING IS BASED ON THE USE OR OCCUPANCY AND WILL BE REVIEWED AS SITE SPECIFIC.
4. PC BUILDINGS LOCATED IN FIRE HAZARD SEVERITY ZONES PER WILDLAND URBAN INTERFACE FIRE AREAS (WUI) SHALL CONFORM TO CBC CHAPTER 7A.
5. AUTOMATIC FIRE SPRINKLER REQUIREMENTS ARE NOT INCLUDED IN THIS PC APPROVAL.
6. THIS PC PLAN SHALL NOT BE USED TO HOUSE "ROOMS OR AREAS WITH SPECIAL HAZARDS" SUCH AS LABORATORIES, VOCATIONAL SHOPS AND OTHER SUCH AREAS NOT CLASSIFIED AS GROUP H, LOCATED IN GROUP E OCCUPANCIES.
7. A SEPARATE DSA APPLICATION NUMBER IS REQUIRED FOR DESIGN & INSTALLATION OF SOLAR PANEL SYSTEMS, ITS ANCHORAGE & SUPPORT STRUCTURE. (NOTE: SOLAR PANEL SYSTEM WEIGHT IS INCLUDED IN BUILDING DESIGN) SOLAR SYSTEM SUBMITTALS SHALL NOT BE SUBMITTED AS AN OVER-THE-COUNTER SUBMITTAL.
8. IF THE STRUCTURE IS LOCATED IN AN AREA WITH LIQUEFIABLE SOIL OR SITE CLASS F, OVER-THE-COUNTER SUBMITTAL IS NOT ALLOWED AND REGULAR PROJECT SUBMITTAL IS REQUIRED. IF THE SITE IS NOT IN A MAPPED LIQUEFACTION HAZARD ZONE, IT MAY BE PRESUMED THAT NO LIQUEFACTION HAZARD EXISTS ON THAT SITE UNLESS A SITE-SPECIFIC GEOTECHNICAL REPORT IDENTIFIES SUCH HAZARD.
9. THIS PC BUILDING IS NOT DESIGNED FOR FLOOD HAZARD AREAS.
10. THE PLACEMENT OF THE PC BUILDING(S) ON OR ADJACENT TO SLOPES SHALL COMPLY WITH THE 'FOUNDATION CLEARANCES FROM SLOPES' SPECIFICATIONS FOUND ON SHEET N2.0 OF THESE DRAWINGS.
11. PC BUILDING SHALL NOT BE PLACED OR BE RELOCATED IN AREAS HAVING A NOISE CONTOUR GREATER THAN OR EQUAL TO 65 CNEL, OR IN AREAS EXPOSED TO A NOISE LEVEL OF 65 dB L_{eq}-1-hr DURING ANY HOUR OF OPERATION WHEN NOISE
12. CONTOURS ARE NOT READILY AVAILABLE, AS SPECIFIED IN CALGREEN CODE, SECTION 5.507.4.1 & 5.507.4.1.1.
13. THIS PC BUILDING IS NOT DESIGNED FOR SNOW LOADS.
14. THIS PC BUILDING IS NOT DESIGNED FOR ICE LOADS.
15. BUILDING SHALL BE MANUFACTURERD IN COMPLIANCE WITH CFC CHAPTER 33 FOR FIRE SAFETY DURING CONSTRUCTION.
16. SUBMITTAL AND APPROVAL OF A GEOHAZARD REPORT BY THE CALIFORNIA GEOLOGICAL SURVEY (CGS) IS NOT REQUIRED FOR SINGLE-STORY MODULAR BUILDINGS PROVIDED THAT THEY DO NOT EXCEED 4,000 SUQARE FEET IN PLAN AREA AND ARE NOT LOCATED WITHIN STATE OR LOCAL GEOLOGICAL HAZARD ZONES IN ACCORDANCE WITH IR A-4, SECTION 3.2.1.
17. THE DESIGN PROFESSIONAL HAS EXEMPTED RAMPS FROM SPECIAL INSPECTION REQUIREMENTS FOR MATERIAL IDENTIFICATION AND STRUCTURAL WELDING. RAMP SHALL NOT BE MODIFIED NOR HAVE SHIMS ADDED CAUSING THE DISTANCE BETWEEN THE HIGHEST RAMP WALKING SURFACE AND THE ADJACENT GRADE TO BE MORE THAN 30 INCHES. IF THIS CONDITION IS NOT MET, STRUCTURAL TESTING AND/OR INSPECTION WILL BE REQUIRED TO VERIFY MATERIALS AND STRUCTURAL WELDING. THIS APPLIES TO SCOPES OF WORK INCLUDING NEW CONSTRUCTION, ALTERATION, OR RELOCATION OF THE RAMP.
18. ACCEPTANCE TESTS BE COMPLETED ON NEWLY INSTALLED OR REPLACEMENT OF LIGHTING CONTROLS, MECHANICAL SYSTEMS, FENESTRATION, AND PROCESS EQUIPMENT BEFORE PROJECT COMPLETION PER THE CALIFORNIA ENERGY CODE SECTION 10-103. ACCEPTANCE TESTS MUST BE PERFORMED BY A CERTIFIED ACCEPTANCE TEST TECHNICIAN (ATT). THE ACCEPTANCE TESTING PROCEDURES MUST BE REPEATED, AND DEFICIENCIES CORRECTED UNTIL THE INSTALLATION OF THE SPECIFIED SYSTEMS CONFORM AND PASS THE REQUIRED ACCEPTANCE CRITERIA. COMPLETED NRCA FORMS SHALL BE SUBMITTED TO THE PROJECT INSPECTOR AND THE DISTRICT.

© 2023 BY AMERICAN MODULAR SYSTEMS, INC.

ALL OF THE DRAWINGS AND DETAILS CONTAINED IN THIS PACKAGE ARE THE INTELLECTUAL PROPERTY OF AMS AND MAY NOT BE USED FOR CONSTRUCTION OR DESIGN BY ANOTHER ENTITY WITHOUT THE EXPRESS WRITTEN PERMISSION OF AMS.

COPYRIGHT: © 2023 BY AMERICAN MODULAR SYSTEMS, INC. ALL RIGHTS RESERVED. NO PART OF THIS DOCUMENT MAY BE REPRODUCED OR TRANSMITTED IN ANY FORM OR BY ANY MEANS, ELECTRONIC, MECHANICAL, PHOTOCOPYING, RECORDING, OR OTHERWISE, WITHOUT THE PRIOR WRITTEN PERMISSION OF AMERICAN MODULAR SYSTEMS, INC. CERTAIN ELEMENTS CONTAINED IN THESE DOCUMENTS ARE REGISTERED TRADEMARKS. ALL PATENTABLE MATERIALS CONTAINED IN THESE DOCUMENTS AND ORIGINATING WITH AMERICAN MODULAR SYSTEMS, INC. SHALL REMAIN THE SOLE PROPERTY OF AMERICAN MODULAR SYSTEMS, INC. SUBMITTAL OR DISTRIBUTION TO MEET OFFICIAL REGULATORY REQUIREMENTS WILL NOT BE CONSTRUED AS PUBLICATION IN DEROGATION OF AMERICAN MODULAR SYSTEM, INC.'S COPYRIGHT OR OTHER RESERVED INTELLECTUAL PROPERTY RIGHTS AND INTERESTS.

BUILDING DATA

OCCUPANCY	E
TYPE OF CONSTRUCTION	V-B
WIND LOAD ASCE 7-16 SECTION 28.5.3 SIMPLIFIED PROCEDURE	V = 99 MPH BASIC WIND SPEED EXPOSURE = C INTERNAL PRESSURE COEFF., $GC_{P,I}$ = ±0.18 RISK CATEGORY II K_{ZT} = 1.00 λ = 1.21 ROOF ANGLE = 1.2°
ICE LOAD	NOT CONSIDERED (SEE GENERAL NOTE #15 THIS SHEET)
SNOW LOAD	NOT CONSIDERED (SEE GENERAL NOTE #14 THIS SHEET)
ROOF LIVE LOAD (MAX PSF)	20
FLOOR LIVE LOAD (PSF)	☐ 50 ☒ 50+15 ☐ 100
RAMP LIVE LOAD (MAX. PSF)	100 (1,000# CONCENTRATED LD)
DESIGN DEAD LOADS (MAX PSF)	13.0 ROOF - 12.0 FLOOR - 10.0 EXT. WALLS
FIRE SPRINKLER SYSTEM DESIGN WT.	NOT CONSIDERED (SEE GENERAL NOTES #5 THIS SHEET)
ALLOWABLE SOIL PRESSURE (PSF)	1,000 FOR WOOD FOUNDATION
FLOOD HAZARD AREA	NO (SEE GENERAL NOTE #11 THIS SHEET)
RAIN INTENSITY (IN/HR)	3" MAX.
BUILDING AREA (SQ. FT.)	960 MIN. THRU 1920 MAX.
CLIMATE ZONE GROUP	☐ A (1,16) ☐ B (2-5) ☒ C (6-13) ☐ D (14,15) (REFER TO EN.1 FOR REQUIREMENTS)
MODULES	LIGHT MODULAR STEEL MOMENT FRAMES PER CBC 2212A
SYSTEM	10'x32' MODULES (3 MODULES MINIMUM - 6 MODULES MAX)
FOUNDATION TYPE	WOOD

SITE-SPECIFIC OPTIONS

FLOOR DECK	1⅛" PLYWOOD SHTG.	
WALL STUDS	WOOD	
EXTERIOR WALL FINISH	☒ DURATEMP VERTICAL SIDING	☐ LAP SIDING
HVAC (SEE M1.7A FOR HVAC TYPES)	☐ INTERIOR FLOOR MOUNTED	☒ EXTERIOR WALL MOUNTED
ROOFING	3" x 20 GA. STANDING SEAM	
ROOF PITCH	☒ SINGLE PITCH	☐ DUAL PITCH
ROOF DIAPHRAGM	STEEL X-BRACING	
FRONT OVERHANG	☐ NO	☒ YES - LENGTH: 5' - 0" FT
REAR OVERHANG	☐ NO	☒ YES - LENGTH: 2' - 0" FT
RAMP(S)	☐ NO	☒ YES (SEE SHEET S10.0)
LIQUEFIABLE SOILS	☒ NO	☐ YES (SEE GENERAL NOTE #10 THIS SHEET)
MAPPED GEOHAZARD ZONE	☒ NO	☐ YES (AS DEFINED BY PC-6 SECTION 1.8)
GEOHAZARD REPORT	☒ NO	☐ YES
IF YES	GEOTECHNICAL FIRM:	
	REPORT #:	REPORT DATE:
GEOTECHNICAL REPORT	☒ NO	☐ YES
IF YES	GEOTECHNICAL FIRM:	
	REPORT #:	REPORT DATE:

☐ THIS SHEET CONTAINS DESIGN OPTION BOXES AVAILABLE FOR SELECTION BASED ON SITE SPECIFIC REQUIREMENTS.

REQUIRED PV SYSTEM SIZE (kW)

CLIMATE ZONE GROUP	BUILDING SIZE			
	30'x32'	40'x32'	50'x32'	60'x32'
	APPROXIMATE CONDITIONED FLOOR AREA			
	960	1280	1600	
☐ A (1 & 16)	NONE	NONE	NONE	NONE
☐ B (2 - 5)	NONE	NONE	NONE	NONE
☒ C (6 - 13)	NONE	NONE	NONE	NONE
☐ D (14 & 15)	NONE	NONE	NONE	2.8

SEE SHEET TS2 FOR SHEET INDEX

SITE SPECIFIC WIND CRITERIA

SITE SPECIFIC BASIC WIND SPEED = 99 MPH   WIND EXPOSURE = C

SITE SPECIFIC SEISMIC VALUES

SITE SPECIFIC S_S = 0.582   SITE SPECIFIC S_1 = 0.251   SITE CLASS = D

SITE SPECIFIC S_{D1} =

NOTE: SITE SHALL BE SITE CLASS "D" DEFAULT IF NO SOILS REPORT

PC BUILDING SEISMIC DESIGN CRITERIA

I_e = 1.0   T = 0.231s   R = 3.5 (OMF)   RISK CATEGORY II

Ω_O = 3.0 C_d = 3.0 ρ = 1.0   SEISMIC DESIGN CATEGORY: D ($S_1 < 0.75$)
E ($S_1 \geq 0.75$)

MAXIMUM STORY DRIFT RATIO = 2.0% (I.E. MAX DRIFT = 0.020 x THE HEIGHT UNDER CONSIDERATION.

LATERAL FORCE RESISTING SYSTEM: LIGHT MODULAR STEEL MOMENT FRAMES PER 2212A

ANALYSIS PROCEDURE: EQUIVALENT LATERAL FORCE

SEISMIC RESPONSE COEFFICIENT IS BASED ON SHORT PERIOD RESPONSE Sds

NOTE:
PER CBC 1613A.2.3, S_{DS} (S_{MS}) SHALL NOT BE TAKEN AS LESS THAN S_{D1} (S_{M1})

NOTE:
FOR ALL LATERAL LOAD CASES, COMPONENTS AND CLADDING DESIGNED FOR: S_{DS} = 1.95

☒ NO SOILS REPORT - ASSUMED SITE CLASS "D" DEFAULT

S_S = 2.440 MAX (SITE) 1.708 (DESIGN)* F_a = 1.2 S_{DS} = 1.95 (SITE) 1.37 (DESIGN)*

S_1 = 1.213 MAX (SITE & DESIGN) F_V = 1.7 S_{D1} = 1.37 MAX (SITE & DESIGN) C_S = 0.393 W (DESIGN)*

☐ WITH SOILS REPORT - SITE CLASS "A", "B" OR "D"

NOTE: GROUND MOTION HAZARD ANALYSIS IS NOT REQUIRED WHERE THE VALUE OF THE PARAMETERS S_{M1} IS INCREASED BY 50% FOR ALL APPLICATIONS OF S_{M1} (ASCE 7-16 w/SUPPLEMENT #3, SECTION 11.4.8, EXCEPTION1)

S_S = 2.932 MAX (SITE) 2.050 (DESIGN)* F_a = 1.0 S_{DS} = 1.95 MAX (SITE) 1.37 (DESIGN)*

S_1 = 1.213 MAX (SITE & DESIGN) F_V = 1.7 S_{D1} = 1.37 MAX (SITE & DESIGN) C_S = 0.393 W (DESIGN)*

☐ WITH SOILS REPORT - SITE CLASS "C"

S_S = 2.440 MAX (SITE) 1.708 (DESIGN)* F_a = 1.2 S_{DS} = 1.95 (SITE) 1.37 (DESIGN)*

S_1 = 1.473 MAX (SITE & DESIGN) F_V = 1.4 S_{D1} = 1.37 MAX (SITE & DESIGN) C_S = 0.393 W (DESIGN)*

☐ WITH SOILS REPORT - SITE CLASS "E"

NOTE: GROUND MOTION HAZARD ANALYSIS IS NOT REQUIRED WHERE THE EQUIVALENT LATERAL FORCE PROCEDURE IS USED FOR DESIGN AND THE VALUE OF C_S IS DETERMINED BY EQ (12.8-2) FOR ALL VALUES OF *T* (ASCE 7-16 w/SUPPLEMENT #3, SECTION 11.4.8, EXCEPTION 2)

S_S = 1.718 MAX (SITE) 1.718 (DESIGN) F_a = 1.2 S_{DS} = 1.37 (SITE) 1.37 (DESIGN)

S_1 = 1.031 MAX (SITE & DESIGN) F_V = 2.0 S_{D1} = 1.37 MAX (SITE & DESIGN) C_S = 0.393 W (DESIGN)

*PER ASCE 7-16, SECTION 12.8.1.3:
THE VALUE OF C_S AND E_V ARE PERMITTED TO BE CALCULATED USING A VALUE OF S_{DS} EQUAL TO 1.0, BUT NOT LESS THAN 70% OF S_{DS} AS DEFINED IN SECTION 11.4.5, PROVIDED THAT ALL OF THE FOLLOWING CRITERIA ARE MET:

1. STRUCTURE DOES NOT HAVE IRREGULARITIES;
2. STRUCTURE DOES NOT EXCEED FIVE (5) STORIES ABOVE THE LOWER OF THE BASE OR GRADE PLANE;
3. STRUCTURE HAS A FUNDAMENTAL PERIOD, T, THAT DOES NOT EXCEED 0.5 SECONDS;
4. STRUCTURE MEETS REQUIREMENTS FOR REDUNDANCY FACTOR, ρ, TO BE TAKEN AS 1.0;
5. SITE SOIL PROPERTIES ARE NOT CLASSIFIED AS SITE CLASS 'E' OR 'F';
6. STRUCTURE IS CLASSIFIED AS RISK CATEGORY II.

HVAC SCHEDULE

BUILDING SIZE & CLIMATE ZONE GROUP (ZONE)	# OF HVAC			
	3½ TON (BARD)	4 TON (BARD)	4 TON (SYSTEM AIR)	5 TON (SYTEM AIR)
☐ 30'x32' GROUP A (1,16)	1			
☐ 30'x32' GROUP B (2-5)	1			
☒ 30'x32' GROUP C (6-13)	1			
☐ 30'x32' GROUP D (14,15)	1			
☐ 40'x32' GROUP A (1,16)	1			
☐ 40'x32' GROUP B (2-5)	1			
☐ 40'x32' GROUP C (6-13)			1	
☐ 40'x32' GROUP D (14,15)			1	
☐ 50'x32' GROUP A (1,16)	2			
☐ 50'x32' GROUP B (2-5)	2			
☐ 50'x32' GROUP C (6-13)	2			
☐ 50'x32' GROUP D (14,15)	2			
☐ 60'x32' GROUP A (1,16)	2			
☐ 60'x32' GROUP B (2-5)	2			
☐ 60'x32' GROUP C (6-13)	2			
☐ 60'x32' GROUP D (14,15)	2			

IDENTIFICATION STAMP
DIV. OF THE STATE ARCHITECT
APP: 02-122533 INC:
REVIEWED FOR
SS ☑ FLS ☑ ACS ☑
DATE: 05/22/2024

American Modular Systems
787 Spreckels Ave., Manteca, CA 95336
Phone (209) 825-1921 Fax (209) 825-7018
www.americanmodular.com

INTELLECTUAL-PROPERTY & PROPRIETARY RIGHTS STATEMENT
COPYRIGHT © AMERICAN MODULAR SYSTEMS (AMS)
AMS OWNS ALL COPYRIGHT AND OTHER INTELLECTUAL-PROPERTY AND PROPRIETARY RIGHTS IN THESE DRAWINGS, SPECIFICATIONS, AND THE MATERIAL CONTAINED HEREIN. CERTAIN ELEMENTS SHOWN IN THESE DOCUMENTS ARE REGISTERED TRADEMARKS OF AMS. ALL PATENTABLE MATERIALS CONTAINED IN THESE DOCUMENTS AND ORIGINATING WITH AMS WILL REMAIN THE SOLE PROPERTY OF AMS. THESE DRAWING, SPECIFICATIONS, AND THE MATERIAL CONTAINED HEREIN MAY NOT BE REPRODUCED, TRANSMITTED, COPIED, DISTRIBUTED, MODIFIED, OR OTHERWISE DISPOSED OF (DIRECTLY OR INDIRECTLY) AND MAY NOT BE USED (IN WHOLE OR IN PART) TO ASSIST IN THE CONSTRUCTION, DESIGN, OR OTHER MAKING OF, OR FOR THE PURPOSE OF FURNISHING ANY INFORMATION FOR THE CONSTRUCTION, DESIGN, OR OTHER MAKING OF, ANY BUILDINGS (MODULAR OR OTHERWISE), DRAWINGS, SPECIFICATIONS, PRINTS, APPARATUS, OR PARTS THEREOF, EXCEPT AS EXPRESSLY PERMITTED BY WRITTEN CONSENT OF, OR IN A WRITTEN AGREEMENT WITH, AMS. SUBMITTAL OR DISTRIBUTION TO MEET OFFICIAL REGULATORY REQUIREMENTS WILL NOT BE CONSTRUED AS PUBLICATION IN DEROGATION OF AMS'S COPYRIGHT OR OTHER INTELLECTUAL-PROPERTY OR PROPRIETARY RIGHTS.

PRE-CHECKED SET NAME

30' x 32' THRU 60' x 32'

2GO®

SITE SPECIFIC PROJECT NAME

GALT JOINT UESD
VERNON GREER ES
(2) 30'X32' BUILDINGS

MANUFACTURER PROFESSIONAL OF RECORD ON PC

LICENSED ARCHITECT RANDALL PATRICK CAVANAGH No. C12631 Ren. 3-31-25 STATE OF CALIFORNIA

THESE DRAWINGS ARE PRELIMINARY AND NOT FOR CONSTRUCTION UNLESS STAMPED & SIGNED BY THE DESIGN PROFESSIONAL OF RECORD.

REVISIONS

1	
2	
3	
4	

DRAWN BY:	A.V.
SCALE:	AS NOTED
DATE:	01/04/24
PROJECT NO:	1878-24

SHEET TITLE:

TITLE SHEET

SHEET NUMBER:

TS

American Modular Systems

VERNON GREER ES
30' x 32' BUILDINGS

SHEET INDEX

ARCHITECTURAL

OPTIONS	SHEET NUMBER	SHEET TITLE
COVER SHEET	☒ TS	TITLE SHEET
	☒ TS-2	SHEET INDEX
INSPECTION FORM	☒ D1	FORM DSA-103
GENERAL NOTES & SPECIFICATIONS	☒ N1.0	GENERAL NOTES & SPECIFICATIONS
	☒ N2.0	GENERAL NOTES & SPECIFICATIONS
	☒ N3.0	TYPICAL SCHEDULES: DOORS, WINDOWS, & FINISHES
	☒ N4.0	ACCESSIBILITY STANDARDS AND DETAILS
	☒ N5.0	MULTIPLE FLOOR PLAN CONFIGURATIONS
ENERGY CALCULATIONS	☒ EN.1A-EN.1C	ENERGY CALCULATIONS - SUMMATION SHEET
	☐ EN.2-EN.3	ENERGY CALCULATIONS - 30x32 BUILDING - GROUP A
	☐ EN.4-EN.5	ENERGY CALCULATIONS - 30x32 BUILDING - GROUP B
	☒ EN.6-EN.7	ENERGY CALCULATIONS - 30x32 BUILDING - GROUP C
	☐ EN.8-EN.9	ENERGY CALCULATIONS - 30x32 BUILDING - GROUP D
	☐ EN.10-EN.11	ENERGY CALCULATIONS - 40x32 BUILDING - GROUP A
	☐ EN.12-EN.13	ENERGY CALCULATIONS - 40x32 BUILDING - GROUP B
	☐ EN.14-EN.15	ENERGY CALCULATIONS - 40x32 BUILDING - GROUP C
	☐ EN.16-EN.17	ENERGY CALCULATIONS - 40x32 BUILDING - GROUP D
	☐ EN.18-EN.19	ENERGY CALCULATIONS - 50x32 BUILDING - GROUP A
	☐ EN.20-EN.21	ENERGY CALCULATIONS - 50x32 BUILDING - GROUP B
	☐ EN.22-EN.23	ENERGY CALCULATIONS - 50x32 BUILDING - GROUP C
	☐ EN.24-EN.25	ENERGY CALCULATIONS - 50x32 BUILDING - GROUP D
	☐ EN.26-EN.27	ENERGY CALCULATIONS - 60x32 BUILDING - GROUP A
	☐ EN.28-EN.29	ENERGY CALCULATIONS - 60x32 BUILDING - GROUP B
	☐ EN.30-EN.32	ENERGY CALCULATIONS - 60x32 BUILDING - GROUP C
	☐ EN.33-EN.34	ENERGY CALCULATIONS - 60x32 BUILDING - GROUP D
	☒ EN.35-EN.39	ENERGY CALCULATIONS - SUPPLEMENTAL SHEETS
FLOOR PLANS	☒ A1.0	TYPICAL FLOOR PLAN
	☐ A1.2	RESTROOM FLOOR PLAN OPTIONS - AGE RANGE: 13-ADULT
	☐ A1.3	RESTROOM FLOOR PLAN OPTIONS - AGE RANGE: 9-12
	☐ A1.4	RESTROOM FLOOR PLAN OPTIONS - AGE RANGE: 5-8
	☐ A1.5	RESTROOM FLOOR PLAN OPTIONS - AGE RANGE 3-4
ROOF PLAN & DETAILS	☒ A2.0	TYPICAL ROOF PLAN - METAL STANDING SEAM
	☒ A2.2	TYPICAL ROOF DETAILS - METAL STANDING SEAM
INTERIOR ELEVATIONS	☒ A4.0	INTERIOR ELEVATIONS - TYPICAL CLASSROOM
	☐ A4.1	INTERIOR ELEVATIONS - RESTROOM OPTIONS
	☐ A4.2	INTERIOR ELEVATIONS - RESTROOM OPTIONS - ALTERNATE AGE RANGES
EXTERIOR ELEVATIONS & ARCHITECTURAL DETAILS – DURATEMP 303 SIDING	☒ A5.0	TYPICAL EXTERIOR ELEVATIONS - DURATEMP VERTICAL SIDING OPTION
	☒ A5.1	TYPICAL ARCHITECTURAL DETAILS - DURATEMP VERTICAL SIDING OPTION
EXTERIOR ELEVATIONS & ARCHITECTURAL DETAILS – LAP SIDING	☐ A5.2	TYPICAL EXTERIOR ELEVATIONS - LAP SIDING OPTION
	☐ A5.3	TYPICAL ARCHITECTURAL DETAILS - LAP SIDING OPTION
SECTIONS	☒ A6.0	TYPICAL LONGITUDINAL & TRANSVERSE BUILDING SECTIONS
MISCELLANEOUS DETAILS	☒ A7.1	MISCELLANEOUS ARCHITECTURAL DETAILS
	☐ A8.0	1-HR FIRE RATED CONSTRUCTION DETAILS

STRUCTURAL

OPTIONS	SHEET NUMBER	SHEET TITLE
MEMBER PROPERTIES	☒ S0.0	LIGHT GAUGE STEEL MEMBER PROPERTIES
WOOD FOUNDATION PLANS & DETAILS	☐ S2.0	WOOD FOUNDATION PLAN - 50 PSF LIVE LOAD
	☒ S2.1	WOOD FOUNDATION PLAN - 50 PSF LIVE LOAD + 15 PSF PARTITION LOAD
	☐ S2.2	WOOD FOUNDATION PLAN - 100 PSF LIVE LOAD
	☒ S2.4	WOOD FOUNDATION DETAILS
FLOOR FRAMING PLAN & DETAILS	☒ S3.0	FLOOR FRAMING PLAN & DETAILS FOR PLYWOOD FLOOR
ROOF FRAMING PLAN & DETAILS	☒ S4.0	ROOF FRAMING PLAN & DETAILS
	☒ S4.2	ROOF FRAMING DETAILS
BUILDING FRAMING ELEVATIONS & DETAILS	☒ S5.0	MOMENT FRAME ELEVATIONS & DETAILS
	☒ S5.1	MOMENT FRAME CONNECTION DETAILS
WALL FRAMING	☒ S8.0	WALL FRAMING ELEVATIONS & SCHEDULES - WOOD STUDS
	☒ S8.1	WALL FRAMING DETAILS - WOOD STUDS
RAMP	☒ S10.0	TYPICAL RAMP PLANS & NOTES
	☒ S10.1	RAMP DETAILS

MECHANICAL

OPTIONS	SHEET NUMBER	SHEET TITLE
FLOOR PLANS	☒ M1.0	TYPICAL REFLECTED CEILING PLAN
	☒ M1.1	TYPICAL MECHANICAL PLAN OPTIONS
	☐ M1.3	RESTROOM REFLECTED CEILING PLANS OPTIONS
DETAILS	☒ M1.4	MECHANICAL & CEILING DETAILS
	☐ M1.4A	MECHANICAL & CEILING DETAILS
	☒ M1.5	MECHANICAL & CEILING DETAILS
	☐ M1.5A	MECHANICAL & CEILING DETAILS
	☐ M1.6	MECHANICAL ROOF DETAILS
MISCELLANEOUS	☒ M1.7	CEILING NOTES & SPECIFICATIONS
	☒ M1.7A	MECHANICAL NOTES & SCHEDULES

ELECTRICAL

OPTIONS	SHEET NUMBER	SHEET TITLE
FLOOR PLANS & DETAILS	☒ E1.0	TYPICAL ELECTRICAL PLAN
	☐ E1.1	RESTROOM OPTIONS ELECTRICAL PLANS
	☒ E1.2	ELECTRICAL NOTES & DETAILS

PLUMBING

OPTIONS	SHEET NUMBER	SHEET TITLE
FLOOR PLAN & DETAILS	☒ P1.0	RESTROOM OPTIONS, PLUMBING PLAN, & FIXTURE SCHEDULE
	☒ P2.0	PLUMBING DETAILS & ACCESSIBLE DETAILS
	☐ P3.0	PLUMBING ISOMETRIC DRAWINGS

IDENTIFICATION STAMP
DIV. OF THE STATE ARCHITECT
APP: 02-122533 INC:
REVIEWED FOR
SS ☑ FLS ☑ ACS ☑
DATE: 05/22/2024

American Modular Systems
787 Spreckels Ave., Manteca, CA 95336
Phone (209) 825-1921 Fax (209) 825-7018
www.americanmodular.com

INTELLECTUAL-PROPERTY & PROPRIETARY RIGHTS STATEMENT
COPYRIGHT © AMERICAN MODULAR SYSTEMS (AMS)
AMS OWNS ALL COPYRIGHT AND OTHER INTELLECTUAL-PROPERTY AND PROPRIETARY RIGHTS IN THESE DRAWINGS, SPECIFICATIONS, AND THE MATERIAL CONTAINED HEREIN. CERTAIN ELEMENTS SHOWN IN THESE DOCUMENTS ARE REGISTERED TRADEMARKS OF AMS. ALL PATENTABLE MATERIALS CONTAINED IN THESE DOCUMENTS AND ORIGINATING WITH AMS WILL REMAIN THE SOLE PROPERTY OF AMS. THESE DRAWING, SPECIFICATIONS, AND THE MATERIAL CONTAINED HEREIN MAY NOT BE REPRODUCED, TRANSMITTED, COPIED, DISTRIBUTED, MODIFIED, OR OTHERWISE DISPOSED OF (DIRECTLY OR INDIRECTLY) AND MAY NOT BE USED (IN WHOLE OR IN PART) TO ASSIST IN THE CONSTRUCTION, DESIGN, OR OTHER MAKING OF, OR FOR THE PURPOSE OF FURNISHING ANY INFORMATION FOR THE CONSTRUCTION, DESIGN, OR OTHER MAKING OF, ANY BUILDINGS (MODULAR OR OTHERWISE), DRAWINGS, SPECIFICATIONS, PRINTS, APPARATUS, OR PARTS THEREOF, EXCEPT AS EXPRESSLY PERMITTED BY WRITTEN CONSENT OF, OR IN A WRITTEN AGREEMENT WITH, AMS. SUBMITTAL OR DISTRIBUTION TO MEET OFFICIAL REGULATORY REQUIREMENTS WILL NOT BE CONSTRUED AS PUBLICATION IN DEROGATION OF AMS'S COPYRIGHT OR OTHER INTELLECTUAL-PROPERTY OR PROPRIETARY RIGHTS.

PRE-CHECKED SET NAME

30' x 32' THRU 60' x 32'

2GO®

SITE SPECIFIC PROJECT NAME

GALT JOINT UESD
VERNON GREER ES
(2) 30'X32' BUILDINGS

MANUFACTURER PROFESSIONAL OF RECORD ON PC

LICENSED ARCHITECT
ANDREW PATRICK HOWARD
No. C12631
Ren. 3-31-25
STATE OF CALIFORNIA

THESE DRAWINGS ARE PRELIMINARY AND NOT FOR CONSTRUCTION UNLESS STAMPED & SIGNED BY THE DESIGN PROFESSIONAL OF RECORD.

REVISIONS

1
2
3
4

DRAWN BY:	A.V.
SCALE:	AS NOTED
DATE:	01/04/24
PROJECT NO:	1878-24

SHEET TITLE:

SHEET INDEX

SHEET NUMBER:

TS2

AUTHORIZED USE: ALL INFORMATION INCLUDED ON THIS SHEET (FORM DSA-103) IS FOR THE SOLE PURPOSE OF RECEIVING DSA APPROVAL AND ISSUANCE OF A PC NUMBER. NO OTHER USE IS AUTHORIZED WITHOUT THE EXPRESS WRITTEN CONSENT OF AMERICAN MODULAR SYSTEMS, INC.

Additional Information for PC designs only, not to be added to DSA-103:

	STOCKPILE	CONSTRUCTION OF PERMANENT MODULAR OR RELOCATABLE BUILDING	RELOCATION OF CERTIFIED RELOCATABLE BUILDING
INSPECTOR CLASS (minimum requirements)	RBIP or Class 1	In Plant: RBIP or Class 1 Site: Class 4 for Single Story Site: Class 2 for Two-Story	Class 4 for Single Story Class 2 for Two-Story
Selection of the Project Inspector and Testing/Special Inspection Agency	by the Owner (not manufacturer) and approved by DSA, A/E of Record and Structural Engineer	by the School District and approved by DSA and A/E responsible for in-plant construction observation.	by the Owner (not manufacturer) and approved by DSA, A/E of Record and Structural Engineer
Cost of the Project Inspector (CAC, Section 4-333(b)) and Testing/Special Inspection Agency (CAC, Section 4-335(b))	by the Owner (not manufacturer)	by the School District	

NOTES:
NOTE 1: REINFORCING STEEL TESTS MAY BE WAIVED FOR ONE-STORY BUILDINGS, PER CBC, SECTION 1910A.2 (1909.2.4*).
NOTE 2: REQUIRED ONLY WHERE THE DETAILS OF THE PC SPECIFY THE USE OF THIS TYPE OF ANCHOR.
NOTE 3: REQUIRED ONLY WHERE THE DETAILS OF THE PC SPECIFY THIS WELDING.
NOTE 4: THESE TESTS AND INSPECTIONS ARE APPLICABLE ONLY WHEN A GEOTECHNICAL REPORT IS REQUIRED.
NOTE 5: WOOD FOUNDATIONS ARE NOT PERMITTED FOR PERMANENT MODULAR BUILDINGS PER CBC SECTION 1807A.1.4.

*INDICATES ALTERNATIVE CBC SECTIONS THAT COMMUNITY COLLEGES MAY USE PER CBC SECTION 1.9.2.2.

FOOTNOTES

1. WAIVER OF CONTINUOUS BATCH PLANT INSPECTION (PER CBC 1705A3.3.1 AND DSA IR 17-13)
   A. CONTINUOUS BATCH PLANT INSPECTION MAY BE WAIVED IF THE CONCRETE PLANT COMPLIES FULLY WITH ASTM C94, SECTION 9 AND 10, AND HAS A CURRENT CERTIFICATION FROM THE "NATIONAL READY MIXED CONCRETE ASSOCIATION" OR ANOTHER AGENCY ACCEPTABLE TO THE ENFORCEMENT AGENCY. THE CERTIFICATION SHALL INDICATE THAT THE PLANT HAS AUTOMATIC BATCHING AND RECORDING CAPABILITIES.
   B. IF THE BATCH PLANT INSPECTION IS WAIVED, THE FOLLOWING REQUIREMENTS a) THRU c) SHALL BE MET:
      a) AN APPROVED AGENCY OR CERTIFIED TECHNICIAN OF THE TESTING LABORATORY SHALL CHECK THE FIRST BATCH AT START OF WORK DAY TO VERIFY MATERIALS AND PROPORTIONS CONFORM TO THE APPROVED MIX DESIGN.
      b) THE LICENSED WEIGHMASTER SHALL POSITIVELY IDENTIFY QUANTITY OF MATERIALS AND CERTIFY EACH LOAD BY A BATCH TICKET.
      c) BATCH TICKETS, INCLUDING MATERIAL QUANTITIES AND WEIGHTS, SHALL BE TRANSMITTED TO THE INSPECTOR OF RECORD PRIOR TO CONCRETE PLACEMENT.
2. ELIMINATION OF CONTINUOUS BATCH PLANT INSPECTION (PER CBC 1705A3.3.2):
   A. BATCH PLANT INSPECTION IS NOT REQUIRED FOR ANY OF THE FOLLOWING CONDITIONS:
      a) SITE FLATWORK,
      b) UNENCLOSED SITE STRUCTURES, INCLUDING BUT NOT LIMITED TO LUNCH OR CAR SHELTERS, BLEACHERS, SOLAR STRUCTURES, FLAG OR LIGHT POLES, OR RETAINING WALLS,
      c) CONTROLLED LOW-STRENGTH MATERIAL BACKFILL, OR
      d) SINGLE STORY RELOCATABLE BUILDINGS LESS THAN 2,160 SQUARE FEET.
3. PER CBC 1910A.2, TESTING MAY BE WAIVED FOR ONE-STORY BUILDINGS IF A CERTIFIED MILL TEST REPORT IS PROVIDED.
4. REQUIRED ONLY WHERE DETAILS SPECIFY THE USE OF THESE ATTACHMENTS.
5. NOT USED
6. THE APPENDIX TO DSA-103 SHALL BE COMPLETED BY THE DESIGN PROFESSIONAL IN GENERAL RESPONSIBLE CHARGE.
7. THE NONDESTRUCTIVE TESTING INSPECTION IS TBD BY AOR/DSA PER PROJECT SPECIFIC REQUIREMENTS. ULTRASONIC TESTING PER DSA IR-PC2 SECTION 10.1 SHALL BE PERFORMED ON 100% OF CJP GROOVE WELDS WHEN THE COLUMNS PER SCHEDULE ON SHEET S5.1 HAVE A THICKNESS OF 5⁄16" OR GREATER. MAGNETIC PARTICLE TESTING SHALL BE PERFORMED ON 25% OF ALL BEAM-TO-COLUMN CJP GROOVE WELDS. NONDESTRUCTIVE TESTING OF COMPLETE JOINT PENETRATION WELDS AT GRAVITY CONNECTIONS SHALL COMPLY WITH AISC 360, CHAPTER N, PER 2022 CBC 1705A.2.1.
8. EXAMPLE DSA-103 FORMS WILL BE USED AS GUIDE TO DEVELOP A SITE-SPECIFIC DSA-103 FORM FOR THE SITE-SPECIFIC PROJECT. EXAMPLE FORMS ON THE PC DRAWINGS WILL BE CROSSED OUT WHEN SITE-SPECIFIC DSA-103 FORMS ARE PROVIDED DURING OTC REVIEW.
9. QUALIFIED REPRESENTATIVE OF LABORATORY OF RECORD OR APPROVED SPECIAL INSPECTOR SHALL VERIFY ALL STEEL IDENTIFICATION PER 2022 CBC 2202A.1 AND DSA IR 17-3 STRUCTURAL WELDING INSPECTION.

DSA 103-22: LISTING OF STRUCTURAL TESTS & SPECIAL INSPECTIONS, 2022 CBC

Application Number: 04-122043 | **School Name:** PC | **School District:** PC
DSA File Number: | **Increment Number:** | **Date Created:** 2023-09-19 17:49:54

2022 CBC

IMPORTANT: This form is only a summary list of structural tests and some of the special inspections required for the project. Generally, the structural tests and special inspections noted on this form are those that will be performed by the Geotechnical Engineer of Record, Laboratory of Record, or Special Inspector. The actual complete test and inspection program must be performed as detailed on the DSA approved documents. The appendix at the bottom of this form identifies work NOT subject to DSA requirements for special inspection or structural testing. The project inspector is responsible for providing inspection of all facets of construction, including but not limited to, special inspections not listed on this form such as structural wood framing, high-load wood diaphragms, cold-formed steel framing, anchorage of non-structural components, etc., per Title 24, Part 2, Chapter 17A (2022 CBC).

****NOTE:** Undefined section and table references found in this document are from the CBC, or California Building Code.

KEY TO COLUMNS

1. TYPE	2. PERFORMED BY
Continuous – Indicates that a continuous special inspection is required **Periodic** – Indicates that a periodic special inspection is required **Test** – Indicates that a test is required	**GE (Geotechnical Engineer)** – Indicates that the special inspection shall be performed by a registered geotechnical engineer or his or her authorized representative. **LOR (Laboratory of Record)** – Indicates that the test or special inspection shall be performed by a testing laboratory accepted in the DSA Laboratory Evaluation and Acceptance (LEA) Program. See CAC Section 4-335. **PI (Project Inspector)** – Indicates that the special inspection may be performed by a project inspector when specifically approved by DSA. **SI (Special Inspection)** – Indicates that the special inspection shall be performed by an appropriately qualified/approved special inspector.

	Test or Special Inspection	Type	Performed By	Code References and Notes
	S/A1. STRUCTURAL STEEL, COLD-FORMED STEEL AND ALUMINUM USED FOR STRUCTURAL PURPOSES			
	Test or Special Inspection	**Type**	**Performed By**	**Code References and Notes**
☑	**a.** Verify identification of all materials and: • Mill certificates indicate material properties that comply with requirements. • Material sizes, types and grades comply with requirements.	**Periodic**	*	**Table 1705A.2.1 Item 3a–3c.** 2202A.1**;** AISI S100-20 Section A3.1 & A3.2, AISI S240-20 Section A3 & A5, AISI S220-20 Sections A4 & A6. * By special inspector or qualified technician when performed off-site.
☑	**b.** Test unidentified materials	**Test**	**LOR**	**2202A.1.**
☑	**c.** Examine seam welds of HSS shapes	**Periodic**	**SI**	DSA IR 17-3.
☑	**d.** Verify and document steel fabrication per DSA-approved construction documents.	**Periodic**	**SI**	Not applicable to cold-formed steel light-frame construction, except for trusses (**1705A.2.4**).
	S/A3. WELDING:			
	Test or Special Inspection	**Type**	**Performed By**	**Code References and Notes**
☑	**a.** Verify weld filler material identification markings per AWS designation listed on the DSA-approved documents and the WPS.	**Periodic**	**SI**	**1705A.2.5, Table 1705A.2.1 Items 4 & 5**; AWS D1.1 and AWS D1.8 for structural steel; AWS D1.2 for Aluminum; AWS D1.3 for cold-formed steel; AWS D1.4 for reinforcing steel; DSA IR 17-3.
☑	**b.** Verify weld filler material manufacturer's certificate of compliance.	**Periodic**	**SI**	DSA IR 17-3.
☑	**c.** Verify WPS, welder qualifications and equipment.	**Periodic**	**SI**	DSA IR 17-3.
	S/A4. SHOP WELDING (IN ADDITION TO SECTION S/A3):			
	Test or Special Inspection	**Type**	**Performed By**	**Code References and Notes**
☑	**c.** Inspect welding of stairs and railing systems.	**Periodic**	**SI**	**1705A.2.1**; AISC 360-16 (and AISC 341-16 as applicable); AWS D1.1 & D1.3; DSA IR 17-3.
	Test or Special Inspection	**Type**	**Performed By**	**Code References and Notes**
	S/A6. NONDESTRUCTIVE TESTING:			
	Test or Special Inspection	**Type**	**Performed By**	**Code References and Notes**
☑	**b.** Magnetic Particle	**Test**	**LOR**	**1705A.2.1, 1705A.2.5;** AISC 341-16 J6.2, AISC 360-16 N5.5; AWS D1.1, AWS D1.8; DSA IR 17-2.

Appendix: Work Exempt from DSA Requirements for Structural Tests / Special Inspections

	WELDING:
☐	3. Non-structural interior cold-formed steel framing spanning less than 15'-0", such as in interior partitions, interior soffits, etc. supporting only self weight and light-weight finishes or adhered tile, masonry, stone, or terra cotta veneer no more than 5/8" thickness and apex less than 20'-0" in height and not over an exit way. Maximum tributary load to a member shall not exceed the equivalent of that occurring from a 10'x10' opening in a 15' tall wall for a header or king stud.
☐	4. Manufactured support frames and curbs using hot rolled or cold-formed steel (i.e., light gauge) for mechanical, electrical, or plumbing equipment weighing less than 2000# (equipment only) (connections of such frames to superstructure elements using welding will require special inspection as noted in selected item(s) for Sections S/A3, S/A4 and/or S/A5 of listing above).
☐	5. Manufactured components (e.g., Tolco, B-Line, Afcon, etc.) for mechanical, electrical, or plumbing hanger support and bracing (connections of such components to superstructure elements using welding will require special inspection as noted in selected item(s) for Sections S/A3, S/A4 and/or S/A5 of listing above).
☐	7. Any support for exempt non-structural components given in CBC Section 1617A.1.18 (which replaces ASCE 7-16, Section 13.1.4) meeting the following: A) when supported on a floor/roof, <400# and resulting composite center of mass (including component's center of mass) ≤4' above supporting floor/roof, B) when hung from a wall or roof/floor, <20# for discrete units or <5 plf for distributed systems.

EXAMPLE FORM DSA 103 WILL BE USED AS A GUIDE TO DEVELOP A SITE-SPECIFIC FORM DSA 103 FOR THE SITE-SPECIFIC PROJECT. EXAMPLE FORM(S) ON THE PC DRAWINGS WILL BE CROSSED OUT WHEN THE SITE-SPECIFIC FORM DSA 103 IS PROVIDED DURING PLAN REVIEW.

IDENTIFICATION STAMP
DIV. OF THE STATE ARCHITECT
APP: 02-122533 INC:
REVIEWED FOR
SS ☑ FLS ☑ ACS ☑
DATE: 05/22/2024

American Modular Systems
787 Spreckels Ave., Manteca, CA 95336
Phone (209) 825-1921 Fax (209) 825-7018
www.americanmodular.com

INTELLECTUAL-PROPERTY & PROPRIETARY RIGHTS STATEMENT
COPYRIGHT © AMERICAN MODULAR SYSTEMS (AMS)
AMS OWNS ALL COPYRIGHT AND OTHER INTELLECTUAL-PROPERTY AND PROPRIETARY RIGHTS IN THESE DRAWINGS, SPECIFICATIONS, AND THE MATERIAL CONTAINED HEREIN. CERTAIN ELEMENTS SHOWN IN THESE DOCUMENTS ARE REGISTERED TRADEMARKS OF AMS. ALL PATENTABLE MATERIALS CONTAINED IN THESE DOCUMENTS AND ORIGINATING WITH AMS WILL REMAIN THE SOLE PROPERTY OF AMS. THESE DRAWING, SPECIFICATIONS, AND THE MATERIAL CONTAINED HEREIN MAY NOT BE REPRODUCED, TRANSMITTED, COPIED, DISTRIBUTED, MODIFIED, OR OTHERWISE DISPOSED OF (DIRECTLY OR INDIRECTLY) AND MAY NOT BE USED (IN WHOLE OR IN PART) TO ASSIST IN THE CONSTRUCTION, DESIGN, OR OTHER MAKING OF, OR FOR THE PURPOSE OF FURNISHING ANY INFORMATION FOR THE CONSTRUCTION, DESIGN, OR OTHER MAKING OF, ANY BUILDINGS (MODULAR OR OTHERWISE), DRAWINGS, SPECIFICATIONS, PRINTS, APPARATUS, OR PARTS THEREOF, EXCEPT AS EXPRESSLY PERMITTED BY WRITTEN CONSENT OF, OR IN A WRITTEN AGREEMENT WITH, AMS. SUBMITTAL OR DISTRIBUTION TO MEET OFFICIAL REGULATORY REQUIREMENTS WILL NOT BE CONSTRUED AS PUBLICATION IN DEROGATION OF AMS'S COPYRIGHT OR OTHER INTELLECTUAL-PROPERTY OR PROPRIETARY RIGHTS.

PRE-CHECKED SET NAME
30' x 32' THRU 60' x 32'
2GO®

SITE SPECIFIC PROJECT NAME
.
.
.

APPROVED
DIV. OF THE STATE ARCHITECT
APP: 04-122041 PC
REVIEWED FOR
SS ☑ FLS ☑ ACS ☑ CG ☑
DATE: 04/05/2024

☐ 2022 CBC PRE-CHECK (PC) DOCUMENT
A SEPARATE PROJECT APPLICATION FOR CONSTRUCTION IS REQUIRED.

MANUFACTURER PROFESSIONAL OF RECORD ON PC

LICENSED ARCHITECT
RANDALL PATRICK CAVANAGH
No. C12631
Ren. 3-31-25
STATE OF CALIFORNIA

THESE DRAWINGS ARE PRELIMINARY AND NOT FOR CONSTRUCTION UNLESS STAMPED & SIGNED BY THE DESIGN PROFESSIONAL OF RECORD.

REVISIONS
1
2
3
4

DRAWN BY:	A.A.
SCALE:	AS NOTED
DATE:	DD/MM/YY
PROJECT NO:	XXXX-XX

SHEET TITLE:
FORM
DSA-103

SHEET NUMBER:
D1

SECTION 1 GENERAL REQUIREMENTS

1. GENERAL
   A. THE REQUIREMENTS OF THE GENERAL CONDITIONS OF THE AGREEMENT AND THIS GENERAL REQUIREMENT APPLY TO THE SEVERAL TRADE SECTIONS WITH THE SAME FORCE AS THOUGH FULLY REPEATED IN EACH TRADE SECTION.
   B. NAME BRANDS ARE INDICATED TO ESTABLISH A STANDARD OF QUALITY. ITEMS OF EQUAL OR BETTER QUALITY MAY BE SUBSTITUTED FOR THE LISTED BRAND NAMED PRODUCTS WITH THE WRITTEN APPROVAL OF D.S.A. AND THE RDPRC.
   C. ALL WORK SHALL COMPLY WITH THE REQUIREMENTS OF TITLES 19 AND 24 CALIFORNIA CODE OF REGULATIONS, 2022 C.B.C. NO CHANGES SHALL BE MADE FROM D.S.A. APPROVED DRAWINGS OR SPECIFICATIONS WITHOUT PRIOR WRITTEN APPROVAL OF D.S.A. AND THE RDPRC.
2. SCOPE OF WORK
   A. THE WORK CONSISTS OF MANUFACTURING OFF-SITE IN A PLANT AND INSTALLING ON-SITE, MODULAR RELOCATABLE BUILDINGS AS DEFINED HEREIN AND SHOWN AND DETAILED ON DRAWINGS.
   B. ALL REQUIREMENTS OF TITLE 24 OF THE STATE OF CALIFORNIA, CODE OF REGULATIONS, RELATING TO INSPECTIONS AND VERIFIED REPORTS SHALL BE COMPLIED WITH AND SHALL INCLUDE:
      1. GENERAL RESPONSIBLE CHARGE OF FIELD ADMINISTRATION TO BE PROVIDED BY THE RDPRC.
      2. INSPECTION IN-PLANT DURING THE COURSE OF CONSTRUCTION BY AN INSPECTOR APPROVED BY THE DIVISION OF THE STATE ARCHITECT AND THE DISTRICT ARCHITECT. THE INSPECTOR SHALL BE RESPONSIBLE FOR AND APPROVED TO INSPECT THE GENERAL CONSTRUCTION WELDING, MECHANICAL, AND ELECTRICAL WORK. COST OF THESE INSPECTIONS SHALL BE BORNE BY THE SCHOOL DISTRICTS.
      3. ON-SITE INSPECTION OF THE BUILDING INSTALLATION ELECTRICAL AND UTILITY INSTALLATION OR CONNECTIONS BY AN INSPECTOR APPROVED BY THE DIVISION OF THE STATE ARCHITECT AND THE DISTRICT ARCHITECT AND RETAINED BY THE SCHOOL DISTRICT.
      4. OTHER SPECIAL TESTS OR INSPECTIONS AS MAY BE REQUIRED BY THE DIVISION OF THE STATE ARCHITECT.
      5. ADDENDUMS SHALL BE SIGNED BY THE RDPRC & APPROVED BY D.S.A.
      6. CHANGES TO CONSTRUCTION DOCUMENT AFFECTING ACS, FLS & SSS SHALL BE SIGNED BY THE OWNER & THE RDPRC & APPROVED BY D.S.A. PRIOR TO COMMENCING WORK. CHANGES TO THE CONSTRUCTION COST ARE REPORTED TO D.S.A. USING FORM DSA-168 AT THE CONCLUSION OF THE PROJECT.
      7. THE TESTING LAB SHALL BE IN THE EMPLOY OF THE OWNER.
      8. ALL CONTRACTORS SHALL VERIFY ALL WORK CONDITIONS, DIMENSIONS AND DETAILS AND REPORT ANY OR ALL OMISSIONS AND DISCREPANCIES TO THE RDPRC/OWNER IMMEDIATELY BEFORE COMMENCING WORK.
      9. EACH CONTRACTOR TO BE RESPONSIBLE TO SEE THAT THEIR WORK CONFORMS TO ALL GOVERNMENTAL CODES WHETHER OR NOT SO STATED ON THE DRAWINGS.
      10. ALL MATERIALS AND WORKMANSHIP TO CONFORM TO THE LATEST REQUIREMENTS OF THE GOVERNING BUILDING CODES IN EFFECT AT TIME OF DSA APPLICATION.
      11. ALL MANUFACTURED ARTICLES, MATERIALS AND EQUIPMENT SHALL BE APPLIED, INSTALLED, CONNECTED AND ERECTED PER MANUFACTURER'S DIRECTIONS AND INSTRUCTIONS.
      12. SHOP DRAWINGS MAY BE REQUIRED. IF SO, THEY WILL BE ACCURATELY DRAWN TO A LARGE ENOUGH SCALE TO SHOW ALL PERTINENT FEATURES OF THE ITEM AND ITS CONNECTION TO RELATED WORK.
      13. THE MANUFACTURER OF BUILDING IS TO PLACE TWO PERMANENT METAL IDENTIFICATION LABEL ON EACH MODULE, MECHANICALLY FASTENED TO THE FRAME SEE "GENERAL DESIGN REQUIREMENTS", SHEET N2.0. FOR PROJECTS MANUFACTURED OFF-SITE, THE PLANT INSPECTOR IS TO INDICATE THE MANUFACTURER'S NAME AND SERIAL NUMBER OF EACH MODULE ON THE VERIFIED REPORT AND D.S.A. APP. NUMBER. SEE "GENERAL DESIGN REQUIREMENTS", SHEET N2.0 FOR ADDITIONAL REQUIREMENTS.
      14. ALL TESTS AND INSPECTIONS REQUIRED BY DSA SHALL BE COMPLIED WITH. ALL TESTS REQUIRED BY FIRE AND LIFE SAFETY REGULATIONS SHALL BE BY A NATIONALLY RECOGNIZED TESTING LABORATORY.

SECTION 2 FOUNDATION

1. ALLOWABLE SOIL BEARING:
   - 1000 P.S.F. FOR WOOD FOUNDATIONS MAX
2. WOOD FOUNDATIONS SHALL BE CONSTRUCTED PER ALL NOTES, SPECIFICATIONS & DETAILS NOTED ON SHEETS S2.0 - S2.4 OF THIS DRAWING PACKAGE.

NOTE: THE FOUNDATION SYSTEM PRESENTED HEREIN COMPLIES WITH INTERPRETATION OF REGULATIONS, IR 16-1, ISSUED BY DIVISION OF THE STATE ARCHITECT, FOR TEMPORARY BUILDINGS.

3. WORK NOT INCLUDED:
   A. ALL ON-SITE OR OFF-SITE UTILITIES AND THE CONNECTION OF THEM TO THE BUILDING UNLESS INDICATED ON THE DRAWINGS.
   B. ALL LEVELING, GRADING OR OTHER SITE PREPARATION EXCEPT WOOD LEVELING STRIPS WHERE REQUIRED, UNLESS OTHERWISE INDICATED ON THE DRAWINGS.
   C. FIRE ALARM SYSTEM, PROGRAM BELL, PUBLIC ADDRESS SYSTEM, INTERCOM SYSTEM, TV, TELEPHONE SYSTEM, UNLESS OTHERWISE INDICATED ON THE DRAWINGS, OR MODIFIED BY CHANGE ORDER.
4. WHEELS AND HITCH SHALL REMAIN THE PROPERTY OF THE CONTRACTOR.
5. ACCESSIBILITY OF SITE: THE SCHOOL DISTRICT SHALL PROVIDE ACCESS TO THE SITE FOR THE INSTALLATION OF BUILDINGS. REMOVAL OF TREES, SHRUBS, FENCING, SPRINKLERS ETC. NECESSARY FOR THE MOVE-IN OF BUILDINGS SHALL BE THE RESPONSIBILITY OF THE SCHOOL DISTRICT.

SECTION 5 STEEL

1. GENERAL - ALL WORK SHALL CONFORM TO THE REQUIREMENTS OF AISC 360-16, TITLE 24 OF CALIFORNIA CODE OF REGULATIONS SECTION 2212A.1.2, AND THE AMERICAN IRON AND STEEL INSTITUTE SPECIFICATIONS FOR DESIGN OF STEEL STRUCTURAL MEMBERS. A COPY OF TITLE 24 SHALL BE KEPT AT THE JOBSITE AT ALL TIMES.
   A. FABRICATION AND ERECTION SHALL COMPLY WITH AISC 360-16 CHAPTER 'M' AND AISC 341-16 CHAPTER 'I'.
2. WELDING - ALL WELDING DONE BY SHIELDED ELECTRIC-ARC OR FLUX CORED-ARC PROCESS COMPLYING WITH REQUIREMENTS OF THE "STRUCTURAL WELDING CODE" OF THE AMERICAN WELDING SOCIETY. WELDING DONE BY OPERATORS QUALIFIED BY TESTS ACCEPTABLE TO THE DIVISION OF THE STATE ARCHITECT. WELDING INSPECTION PER TITLE 24, PART 2, CCR, SECTIONS 1705A.2.5 WELDING ELECTRODE SHALL BE E70XX. ALL WELDS USED IN PRIMARY MEMBERS AND CONNECTIONS IN THE LATERAL FORCE-RESISTING SYSTEMS SHALL BE MADE WITH A FILLER METAL THAT HAS A MINIMUM CHARPY V-NOTCH TOUGHNESS OF 20FT-LBS AT ZERO DEGREES F AND COMPLYING WITH AWS D1.8-16. SECTION 6.1.
3. STRUCTURAL STEEL SHAPES SHALL CONFORM TO THE FOLLOWING:
   A. WIDE FLANGE BEAMS SHALL CONFORM TO ASTM A992, GRADE 50, TYP. U.N.O.
   B. STRUCTURAL STEEL CHANNELS SHALL CONFORM TO ASTM A36 (36 KSI) TYP. U.N.O. NOTE: ASTM A572 (50 KSI) MAY BE SUBSTITUTED FOR A36 (36 KSI). WHERE DRAWINGS SPECIFY 36 KSI MIN., CHANNELS MAY CONFORM TO EITHER ASTM A36 (36KSI) OR ASTM A572 (50 KSI).
   C. PIPE COLUMNS SHALL CONFORM TO ASTM A-53 WITH SULFUR CONTENT NOT EXCEEDING 0.05% TYP. U.N,O.
   D. STRUCTURAL STEEL TUBING (HSS) SHALL CONFORM TO ASTM A500 GRADE B OR C OR ASTM A1085, TYP. U.N.O.
   E. STEEL PLATES, ANGLES, BARS AND MISC. SHAPES SHALL CONFORM TO ASTM A36 (36 KSI) TYP. U.N.O. NOTE: ASTM A572 (50 KSI) MAY BE SUBSTITUTED FOR A36 (36 KSI).
   F. STRUCTURAL WELDS ARE DESIGNED FOR FULL ALLOWABLE STRESS UNLESS OTHERWISE NOTED.
4. ERECTION - STRUCTURAL STEEL ERECTED TRUE, STRAIGHT, PLUMB AND TO ITS DESIGNATED LOCATIONS. FIELD CONNECTIONS BOLTED OR WELDED AS INDICATED ON THE DRAWINGS.
5. NAILS, BOLTS, SCREWS AND NUTS, ETC. - FOR EXTERIOR WORK SHALL BE CADMIUM PLATED OR GALVANIZED.
   A. BOLTS FOR STRUCTURAL STEEL CONNECTIONS SHALL CONFORM TO ASTM A-307 UNLESS OTHERWISE NOTED. ALL HOLES FOR BOLTS THRU STEEL TO BE DRILLED, OR TORCHED PILOT HOLE AND REAMED TO DIAMETER IF BOLT +1/16" UNLESS OTHERWISE NOTED. NELSON STUDS (WELDED TO STEEL) MAY BE SUBSTITUTED FOR BOLTS SAME LENGTH AND DIAMETER.
   B. SEE "FASTENERS FOR ATTACHMENT TO STEEL" ON SHEET N2.0 FOR SHOT PINS & SCREWS.
6. HANDRAILS - FABRICATED, AS DETAILED, NON-FILLET WELDS GROUND SMOOTH.
7. SHOP PAINT
   A. EXPOSED STEEL COATED WITH ONE SHOP COAT OF RED OXIDE PRIMER.
   B. ALL SURFACES THOROUGHLY CLEANED BY EFFECTIVE MEANS PRIOR TO APPLICATION OF SHOP COATS.
8. TESTS
   A. PROVIDE MILL CERTIFICATES OR TEST ALL STEEL MEMBERS PER TITLE-24 PART 2, CCR SECTION 1705A.2 & 2202A.

SECTION 6 CARPENTRY

1. SCOPE OF WORK
   CONTRACTOR SHALL PROVIDE ALL LABOR, MATERIALS AND SERVICES TO INSTALL CARPENTRY.
2. MATERIALS
   LUMBER GRADE MARKED IN ACCORDANCE WITH AN APPROVED GRADING AGENCY PER DOC PS 20-20 INCLUDING “STANDARD GRADING AND DRESSING RULES NO. 17" OF WEST COAST LUMBER INSPECTION BUREAU, OR "WESTERN LUMBER GRADING RULES", LATEST EDITION OF WESTERN WOOD PRODUCTS ASSOCIATION. OSB OR PLYWOOD GRADE MARKED IN ACCORDANCE WITH PRODUCT STANDARD PS 1-19 FOR SOFTWOOD OSB OR PLYWOOD, OF AMERICAN PLYWOOD ASSOCIATION. EACH SHEET SHALL BEAR THE STAMP OF APA, PITTSBURGH TESTING, OR TECO. MOISTURE CONTENT SHALL NOT EXCEED 19%.
   A. JOISTS, HEADERS, PLATES STUDS: DOUGLAS FIR S4S #2 OR HEM FIR S4S #2 MIN. U.N.O. NOTE: MSR 1650 E1.5 MAY BE SUBSTITUTED FOR #2 GRADE IF IT MEETS THE STRUCTURAL REQUIREMENTS FOR FLOOR AND ROOF MEMBERS.
   B. PSL HEADERS: TRUS JOIST PARALLAM PSL BY WEYERHAEUSER (ICC ESR-1387) OR EQUIV. MEETING THE FOLLOWING STRUCTURAL PROPERTIES:

BEAMS ≤ 7" DEEP & COLUMNS	BEAMS ≥ 9¼" DEEP
F_b = 2400 PSI MIN.	F_b = 2900 PSI MIN.
F_v = 190 PSI MIN.	F_v = 290 PSI MIN.
E = 1.8E6 PSI MIN.	E = 2.0E6 PSI MIN.

   C. POSTS AND TIMBERS: DOUGLAS FIR S4S #1 OR HEM FIR S4S #1 MIN.
   D. BLOCKING: DOUG FIR #3, OR HEM FIR #3, OR STD. & BET.
   E. SILLS AND LUMBER & SHIM PLATES IN CONTACT WITH CONCRETE, MASONRY OR EARTH: DOUG FIR #2 OR HEM FIR #2 MIN. PRESSURE TREATED IN ACCORDANCE WITH CBC 2304.12.1. EACH PIECE SHALL BEAR AWPA STAMP. AWPA STANDARD U1 & T1 GROUND CONTACT, D.F. (OR H.F.) #2 ABOVE GROUND.
   F. MOISTURE BARRIER: KRAFT WATERPROOF BUILDING PAPER, OR 15 LB. FELT, CBC SECTION 1403.2 & ASTM D226, TYPE I.
   G. STUDS - S4S DOUG FIR #2 OR #2 HEM FIR. MAXIMUM MOISTURE CONTENT OF 19% AT TIME OF INSTALLATION.
   H. FASTENERS - FASTENERS SHALL BE CORROSION RESISTANT PER C.B.C. 2304.10.1.1 COMMON NAILS PER ASTM F1667 FOR EXTERIOR SIDING & FOUNDATION ONLY.
   I. BUILDING TRIM - 2x RESAWN SELECT D.F., H.F., OR CEDAR.
   J. DOOR/WINDOW TRIM - 1x4 RESAWN D.F., H.F., OR CEDAR.
   K. FRAMING CONNECTORS SHALL BE FROM SIMPSON CATALOG LATEST ED.
   L. FIRE BLOCKS SHALL CONFORM TO CBC SECTION 718.2
   M. ALL NAILS SHALL BE COMMON NAILS PER ASTM F1667 UNLESS OTHERWISE NOTED.
   N. ALL CUT ENDS & HOLES IN PRESSURE TREATED LUMBER SHALL BE TREATED WITH "CUPRINOL".
   O. ALL BOLTS & LAG SCREWS SHALL COMPLY WITH THE 2015 NATIONAL DESIGN SPECIFICATION FOR WOOD CONSTRUCTION (ANSI\AWC NDS-2015).

CARPENTRY continued

   P. HOLES FOR BOLTS IN WOOD SHALL BE BORED WITH A BIT OF THE SAME NOMINAL DIAMETER AS THE BOLT + 1/16".
   Q. HOLES FOR LAG SCREWS SHALL BE FIRST BORED TO THE SAME NOMINAL DIAMETER AND DEPTH AS THE SHANK. THE REMAINDER OF THE HOLE SHALL BE 40% TO 70% OF THE SHANK DIAMETER.
   R. ALL BOLTS AND LAG SCREWS SHALL BE PROVIDED WITH METAL WASHERS UNDER HEADS AND NUTS WHICH BEAR ON WOOD.
3. WORKMANSHIP
   A. FRAMING - SECURELY NAILED, BRIDGED AND BLOCKED TO FORM RIGID STRUCTURE. WORK CUT, FITTED AND ASSEMBLED LEVEL PLUMB AND TRUE TO LINE. TRIM IN AS LONG LENGTHS AS POSSIBLE WITH ALL STANDING TRIM IN ONE PIECE. TRIM SEALED AT ALL EDGES.
   B. NAILING - IN ACCORDANCE WITH TITLE 24, CALIFORNIA BUILDING CODE, TABLE 2304.10.1.
   C. EXTERIOR WALLS - FACTORY FABRICATED. CAULKING PROVIDED BETWEEN PERIMETER OF WALL AND STRUCTURAL MEMBERS PROVIDING WEATHER-PROOF AND WATER-TIGHT SEAL. NECESSARY CLOSERS, SEALS, AND FLASHINGS PLACED AT TOP AND BASE SUPPORT OF PANELS AND AROUND OPENINGS.
   D. NAILS INTO P.T. LUMBER TO BE HOT DIPPED GALVANIZED.
   E. MACHINE APPLIED NAILING: USE OF MACHINE NAILING IS SUBJECT TO A SATISFACTORY JOBSITE DEMONSTRATION FOR EACH PROJECT AND THE APPROVAL BY THE RDPRC AND THE DIVISION OF THE STATE ARCHITECT. THE APPROVAL IS SUBJECT TO CONTINUED SATISFACTORY PERFORMANCE. MACHINE NAILING WILL NOT BE APPROVED IN 5/16" OSB. IF NAILHEADS PENETRATE THE OUTER PLY MORE THAN WOULD BE NORMAL FOR A HAND HAMMER OR IF MINIMUM ALLOWABLE EDGE DISTANCES ARE NOT MAINTAINED THE PERFORMANCE WILL BE DEEMED UNSATISFACTORY.
   F. MOISTURE BARRIER - APPLIED TO STUDS WEATHER-BOARD FASHION, HORIZONTAL JOINTS LAPPED MIN 6" INCLUDING BUILDING CORNERS. SHEATHING APPLIED OVER MOISTURE BARRIER.
   G. TRIM SEALED AT ALL EDGES. SEALANT PAINTED TO MATCH TRIM OR SIDING UNLESS TRANSPARENT TYPE.

SECTION 7A SHEET METAL (NON-STRUCTURAL)

1. SCOPE OF WORK
   CONTRACTOR SHALL PROVIDE ALL LABOR, MATERIALS AND SERVICES TO INSTALL INDICATED SHEET METAL.
2. MATERIALS
   A. SHEET METAL - STEEL SHEETS HOT DIP GALVANIZED WITH 1.25 OZ. PER SQUARE FOOT ZINC COATING CONFORMING TO ASTM A653 MINIMUM 26 GA. UNLESS OTHERWISE NOTED ON THE DRAWINGS.
   B. SOLDER - OF STAND, GRADE "A" OF EQUAL PARTS, ARD BRAND, LEAD AND TIN ASTM B32.
   C. FLUX - ZINC SATURATED MURIATIC ACID.
   D. GUTTERS: 26 GA. G-90 GALV. STEEL
      DOWNSPOUTS: 2"x3" CONVOLUTED 30 GA. G-90 GALV. STEEL
      GUTTER ENDCAPS: 26 GA. G-90 GALV. STEEL
      GUTTER CLIPS: 18 GA. G-90 GALV. STEEL
      FLASHING: 22 GA. G-90 GALV. STEEL
   E. FASTENERS:
      SELF-DRILLING OR SELF-TAPPING SHEET METAL SCREWS.
      LENGTH TO HAVE (3) EXPOSED THREADS MIN.
3. WORKMANSHIP
   SHEET METAL ACCURATELY FORMED TO DIMENSIONS AND SHAPES DETAILED WITH TRUE STRAIGHT LINES, CORNERS AND ANGLES. FLASHING INSTALLED IN LONGEST LENGTHS POSSIBLE. EXTERIOR WORK FORMED, FABRICATED AND INSTALLED SO THAT IT ADEQUATELY PROVIDES FOR EXPANSION AND CONTRACTION IN THE COMPLETED WORK AND FINISHES WATER AND WEATHER TIGHT. ALUMINUM SHALL BE SEPARATED FROM FERROUS METAL BY POLYETHYLENE TAPE OR FLOOD COAT OF ASPHALTIC PAINT.

SECTION 7B METAL ROOFING

1. SCOPE OF WORK
   CONTRACTOR SHALL PROVIDE ALL LABOR, MATERIALS AND SERVICES TO INSTALL METAL ROOFING.
2. MATERIALS
   A. ROOF: 3 INCH STANDING SEAM, MINIMUM 20-GAUGE G-90 GALV. INTERLOCKING (UN-PENETRATED) SHEET STEEL PANELS (G90).
   B. CLASS A.
   C. FASTENERS SHALL BE HOT-DIPPED GALVANIZED.

SECTION 7C SEALANT

1. SCOPE OF WORK
   CONTRACTOR SHALL PROVIDE ALL LABOR, MATERIAL AND SERVICES TO SEAL BUILDINGS.
2. MATERIALS
   VULKEM SEALANT, POLYURETHANE, MANUFACTURED BY MAMECO INTERNATIONAL FOR ROOFS. "GEOCEL" SILICONIZED CAULK, GE, DUPONT, EAGLESEAL OR DAP FOR ALL OTHER APPLICATIONS, OR EQUAL.
   A. SEALANT V.O.C. LIMITS PER SCAQMD RULE 1168 (AS SHOWN IN TITLE 24, PART 11, TABLE 5.504.4.1 AND TABLE 5.504.4.2)
3. WORKMANSHIP
   SEALANT APPLIED TO DRY CLEAN SURFACES, WHEREVER INDICATED ON DETAILS AND AS NEEDED TO MAKE BUILDING WATERTIGHT IN ACCORDANCE WITH MANUFACTURER'S SPECIFICATIONS.

SECTION 8 HOLLOW METAL DOORS AND FRAMES

1. SCOPE OF WORK
   CONTRACTOR SHALL PROVIDE ALL LABOR, MATERIALS AND SERVICES TO INSTALL HOLLOW METAL DOORS AND FRAMES.
2. MATERIALS
   A. DOORS - INSULATED TYPE L FULL FLUSH, MANUFACTURED BY AMWELD MANUFACTURING COMPANY, 18 GA. 1-3/4" THICK PER CS242 MIN, REINFORCE FOR HARDWARE-BOTH FACES FOR CLOSER, SOUND DEADEN INTERIOR.
   B. FRAMES - 16 GA COLD ROLLED, 2" FACES, CS242 MIN. 3 ANCHORS PER JAMB + ADJUSTABLE FLOOR ANCHOR, EACH JAMB REINFORCE FOR HARDWARE. PROVIDE STRIKE BOX, PROVIDE SOUND DEADENING: 1/8" UNDERCOATING OR INSULATING FILL.
3. WORKMANSHIP
   ALL WORK FABRICATED IN SHOP TO REQUIRED PROFILES BY FORMING AND WELDING, WITH ARISES AND EDGES STRAIGHT, SHARP FIT FABRICATED ACCURATELY WITH SQUARE CORNERS, HAIRLINE JOINTS AND SURFACES FREE FROM WARP, WAVE, BUCKLE OR OTHER DEFECTS AFTER FABRICATION, DOORS AND FRAMES CLEANED THOROUGHLY, ALL WELDS GROUND SMOOTH AND GIVEN PRIME COAT.

SECTION 9B PAINTS & COATINGS

1. SCOPE OF WORK.
   CONTRACTOR SHALL PROVIDE ALL LABOR, MATERIALS AND SERVICES TO PAINT BUILDING. ALL EXPOSED SURFACES OF BUILDING AND RAMPS SHALL BE PAINTED EXCEPT ALUMINUM WINDOW FRAMES, THRESHOLDS, AND ROOFING.
2. MATERIALS
   A. FOR EXTERIOR WOOD:

REF.BRAND	DUNN EDWARDS	KELLY MOORE	SHERWIN WILLIAMS	SINCLAIR
PRIMER	42-9M	1240	Y24W20	289-N
FINISH	QD-60-XX	1240-XXX	B54WZ102	GE2-NXX

   B. FOR INTERIOR TRIM:

REF.BRAND	DUNN EDWARDS	KELLY MOORE	SHERWIN WILLIAMS	SINCLAIR
FINISH	W450-XX	1650-XXX	A26W11	40XX

   C. FOR METAL:

REF.BRAND	DUNN EDWARDS	KELLY MOORE	SHERWIN WILLIAMS	SINCLAIR
PRIMER	43-4	1710	B50NZ6	15N
FINISH	10-XX	1700-XXX	B54WZ102	GE2-NXX

   D. INTERIOR PAINT & COATINGS SHALL COMPLY WITH TITLE 24, PART 11, "CAL-GREEN" SECTION 5.504.4.3, AND V.O.C. LIMITS PER TABLE 5.504.4.3.
3. WORKMANSHIP
   ALL EXPOSED SURFACES SHALL BE PAINTED EXCEPT ALUMINUM WINDOW FRAMES, THRESHOLDS AND METAL ROOFING. MATERIAL SHALL BE OF THE GRADE SPECIFIED OR EQUAL.
   A. EXTERIOR WOOD SIDING, TRIM AND SKIRTING - FLAT OR SEMI-GLOSS LATEX. APPLY ONE COAT OF PRIME AND AT LEAST ONE FINISH COAT. PRIME COAT SHALL BE BRUSHED ON OR SPRAYED AND BACK BRUSHED INTO ALL GROOVES IN THE SIDING. IF NECESSARY, IN THE OPINION OF THE INSPECTOR, AN EXTRA COAT SHALL BE APPLIED TO ALL GROOVES SO THAT THE FINISH COAT WILL HAVE A UNIFORM APPEARANCE. ALLOW PRIME COAT TO DRY ACCORDING TO MANUFACTURER'S RECOMMENDATION. PRIME AND FINISH COATS SHALL BE COMPATIBLE AND MANUFACTURED BY THE SAME COMPANY.
   B. INTERIOR TRIM - TRIM NOT PRE-COATED SHALL BE PAINTED WITH TWO COATS OF SEMI-GLOSS LATEX OVER PRIMER.
   C. INTERIOR HARDWOOD CABINETS - TWO COATS LOW LUSTER POLYURETHANE FINISH. APPLY FIRST COAT THINNED WITH ONE QUART MINERAL SPIRITS PER GALLON. APPLY SECOND COAT AS RECOMMENDED BY MANUFACTURER.
   D. METAL - ALL METAL SURFACES SHALL BE PAINTED WITH TWO COATS OF ALKYD FINISH COAT OVER ZINC CHROMATE OR EQUAL RUST INHIBITING PRIMER.
   E. RAMP - ONE COAT OF FERROX NON-SLIP (0.8 MIN. C.O.F.) SURFACING AS MANUFACTURED BY AMERICAN ABRASIVE METALS OR COMPARABLE. ALL PAINTS OF THE TYPE INDICATED SHALL BE LISTED ON THE STATE OF CALIFORNIA QUALIFIED PRODUCTS LIST, OR EQUAL.
   F. SUBMIT ONE SET OF COLOR SAMPLES TO THE RDPRC FOR EACH PRODUCT TO ASSIST IN SELECTION.

SECTION 9C INTERIOR AIR QUALITY CONTROL

THE INTERIOR ENVIRONMENT SHALL BE ASSEMBLED WITH PRODUCTS THAT CONTRIBUTE TO A HEALTHY INDOOR AIR QUALITY (IAQ). THE FOLLOWING SHALL COMPLY TITLE 24, PART 11 ("CAL-GREEN"):

1. ADHESIVES, SEALANTS, CAULKS — SECTION 5.504.4.1
2. PAINTS, COATINGS — SECTION 5.504.4.3
3. AEROSOL PAINTS & COATINGS — SECTION 5.504.4.3.1
4. CARPET SYSTEMS — SECTION 5.504.4.4
   A. CARPET SHALL MEET CRI'S "GREEN LABEL PLUS" PROGRAM, NSF/ANSI '140 GOLD' LEVEL, OR OTHER APPROVED TESTING PER 5.504.4.4.
5. CARPET CUSHION OR PAD — SECTION 5.504.4.4.1
   A. CUSHION/PAD SHALL MEET THE CRI'S "GREEN LABEL" PROGRAM.
6. CARPET ADHESIVE — SECTION 5.504.4.4.2
   A. ADHESIVES SHALL MEET THE REQUIREMENTS OF TABLE 5.504.4.1.
7. COMPOSITE WOOD PRODUCTS — SECTION 5.504.4.5
   A. ALL COMPOSITE WOODS MUST NOT EXCEED THE FORMALDEHYDE LIMITS AS SPECIFIED IN ARB'S "AIR TOXICS CONTROL MEASURE" (17 CCR 93120), OR NON-EXEMPT MATERIALS PER TABLE 5.504.4.5.
8. RESILIENT FLOORING SYSTEMS — SECTION 5.504.4.6
   A. RESILIENT FLOORING SHALL BE CERTIFIED UNDER THE "FLOORSCORE" PROGRAM BY RFCI, COMPLY WITH CA-CHPS, OR OTHER APPROVED TESTING PER 5.504.4.6.
9. HVAC FILTER MERV RATING OF 13 AND MINIMUM 2-INCH DEPTH) SECTION 5.504.5.3.1
   A. SEE SHEET M1.7 FOR HVAC FILTER REQUIREMENTS

SECTION 13 SITE ASSEMBLY

1. SCOPE OF WORK
   CONTRACTOR SHALL PROVIDE ALL LABOR MATERIALS AND SERVICES TO PREPARE THE BUILDING ELEMENTS, TRANSPORT THEM FROM THE PLANT TO THE SITE AND TO COMPLETE THE ASSEMBLY AT THE SITE. THE CONDITION OF THE SITE, SUCH AS DRAINAGE AND SOIL BEARING CAPACITY, SHALL BE THE RESPONSIBILITY OF THE SCHOOL DISTRICT. UNLESS SPECIFICALLY CALLED FOR IN THE CONTRACT, STEPS, RAMPS, OR HANDRAILS SHALL BE THE RESPONSIBILITY OF THE CONTRACTOR.
2. ASSEMBLY OF ELEMENTS
   A. IN A LOCATION ON THE SITE AS DETERMINED BY THE SCHOOL DISTRICT, (APPROVED BY DSA) THE CONTRACTOR SHALL PLACE WOOD LEVELING STRIPS OR OTHER SUITABLE SUPPORTS AS DETAILED ON THE DRAWINGS.
   B. THE ELEMENTS SHALL BE BROUGHT TO THE SITE ON WHEEL ASSEMBLY AND TRANSFERRED TO THE PREPARED SITE. GREAT CARE SHALL BE TAKEN TO AVOID DAMAGE TO THE ELEMENTS BY RACKING OR BUMPING EACH OTHER.
   C. CONNECTION OF THE ELEMENTS TOGETHER SHALL BE DONE ACCORDING TO INSTRUCTION ON THE DRAWINGS. FLASHINGS, TRIM AND OTHER LOOSE ITEMS SHALL BE INSTALLED PER DETAILS ON THE DRAWINGS.

SECTION 23 AIR CONDITIONING

1. SCOPE OF WORK (SEE SHEET M1.7 FOR HVAC SPEC. AND NOTES)
   CONTRACTOR SHALL PROVIDE ALL LABOR, MATERIALS AND SERVICES TO INSTALL THE AIR CONDITIONING SYSTEM AS SHOWN ON THE DRAWINGS AND SPECIFICATIONS, INCLUDING A/C UNITS AND ACCESSORIES, REMOTE THERMOSTAT, GRILLS AND POWER WIRING COMPLETE TO LOAD CENTER. CONTRACTOR SHALL INSTRUCT OWNER'S OPERATORS ON OPERATION AND MAINTENANCE OF A/C SYSTEM.
2. EQUIPMENT
   SEE NOTE ON FLOOR PLAN FOR SIZE AND TYPE.
3. WORKMANSHIP
   UNITS SHALL BE INSTALLED COMPLETE AND OPERATING WITH ALL ACCESSORIES IN ACCORDANCE WITH THE MANUFACTURER'S INSTRUCTIONS.

SECTION 26 ELECTRICAL

1. SCOPE OF WORK
   A. CONTRACTOR SHALL PROVIDE ALL LABOR, MATERIALS AND SERVICES FOR ELECTRICAL INSTALLATION COMPLETE WITH ASSOCIATED EQUIPMENT AND FIXTURES, IN OPERATING CONDITION READY FOR USE. THE WORK INCLUDES: LIGHT AND POWER SYSTEMS, LIGHTING FIXTURES COMPLETE WITH LAMPS, CONNECTIONS AND DISCONNECTS TO A/C EQUIPMENT, EMERGENCY VOICE ALARM COMMUNICATION SYSTEMS (EVACS).
   B. PROVIDE CONDUIT WITH PULL STRINGS AND JUNCTION BOXES FOR AUTOMATIC DETECTION FIRE ALARM SYSTEM AND NOTIFICATION PER NFPA 72.
2. MATERIALS
   ALL NEW COMPLYING WITH REQUIREMENTS OF CALIFORNIA ELECTRIC CODE AND NATIONAL FIRE PROTECTION ASSOCIATION.
   A. ELECTRIC METALLIC TUBING - COUPLING AND FLEX CONDUIT GALVANIZED OR SHERARDIZED. EXTERIOR FLEX-GALV. STEEL WITH FACTORY APPLIED P.V.C. JACKET.
   B. PANEL BOARDS - FLUSH MOUNTED.
   C. CONDUCTORS - COPPER, INSULATED FOR 600 VOLTS, TYPE THHN FOR SIZES #12 TO #6, TYPE THW FOR LARGER SIZES. MINIMUM SIZE-#14.
   D. RECEPTACLES - AS NOTED. +18" A.F.F. MIN. TO BOTTOM OF BOX
   E. CLOCK RECEPTACLE - AS NOTED.
   F. SWITCHES - AS NOTED. +48" A.F.F. MAX. TO TOP OF BOX
   G. LIGHTING FIXTURES - AS NOTED ON THE DRAWINGS.
3. WORKMANSHIP
   MATERIALS AND EQUIPMENT INSTALLED IN A SECURE, NEAT, WORKMANLIKE MANNER IN ACCORDANCE WITH CODE REQUIREMENTS. PANEL BOARD CARDS SHALL BE FILLED OUT. CONDUIT AND CABLE INSTALLED IN WALL AND CEILING SPACES. WORK PIERCING WATERPROOFED AREAS FLASHED AND SEALED TO A WATERTIGHT CONDITION. BUILDING CONDUIT/WIRING FROM FACE OF BUILDING TO SITE TERMINATION BY SITE CONTRACTOR (N.I.C.). (FLEXIBLE CONDUIT S-BEND SEALTITE).

INSPECTION

INSPECTION OF PREFABRICATED BUILDINGS IS DIVIDED INTO TWO SEPARATE FUNCTIONS:

1. IN-PLANT INSPECTION.
2. ON-SITE INSPECTION.

THE CONTRACTOR SHALL ALLOW UP TO SEVEN (7) DAYS FROM THE DATE OF PLAN APPROVAL TO OBTAIN AN IN-PLANT INSPECTOR APPROVED BY D.S.A.

IN-PLANT INSPECTION AND MATERIAL TESTING SHALL BE ACCOMPLISHED UNDER THE SUPERVISION OF THE DISTRICT ARCHITECT. THE CONTRACTOR SHALL NOTIFY THE DISTRICT ARCHITECT, DSA, AND THE DESIGNATED INSPECTOR/INSPECTION AGENCY AT LEAST 48 HOURS PRIOR TO COMMENCING WORK. THE MANUFACTURER SHALL PROVIDE THE INSPECTOR WITH FULL ACCESS TO ALL PLANT OPERATIONS INVOLVING WORK UNDER THIS CONTRACT AND SHALL ADVISE THE INSPECTOR IN ADVANCE OF THE TIME AND PLACE OF OPERATIONS THAT THE INSPECTOR WANTS TO OBSERVE TAKE PLACE. BEFORE THE BUILDING(S) ARE REMOVED FROM THE PLANT FOR DELIVERY TO THE STORAGE FACILITY, OR FROM THE STORAGE FACILITY TO THE SITE, THE INSPECTOR SHALL DETERMINE THAT THEY ARE ACCEPTABLE AND ISSUE A WRITTEN RELEASE WHICH SHALL BE IN THE FORM OF A VERIFIED REPORT (FORM DSA 152-IPI).

A COPY OF THE INSPECTOR'S VERIFIED REPORT SHALL ACCOMPANY EACH BUILDING TO STORAGE OR TO THE SITE. THE INSPECTOR SHALL PUT ONE COPY IN EACH BUILDING.

IDENTIFICATION STAMP
DIV. OF THE STATE ARCHITECT
APP: 02-122533 INC:
REVIEWED FOR
SS ☑ FLS ☑ ACS ☑
DATE: 05/22/2024

American Modular Systems
787 Spreckels Ave., Manteca, CA 95336
Phone (209) 825-1921 Fax (209) 825-7018
www.americanmodular.com

INTELLECTUAL-PROPERTY & PROPRIETARY RIGHTS STATEMENT
COPYRIGHT © AMERICAN MODULAR SYSTEMS (AMS)
AMS OWNS ALL COPYRIGHT AND OTHER INTELLECTUAL-PROPERTY AND PROPRIETARY RIGHTS IN THESE DRAWINGS, SPECIFICATIONS, AND THE MATERIAL CONTAINED HEREIN. CERTAIN ELEMENTS SHOWN IN THESE DOCUMENTS ARE REGISTERED TRADEMARKS OF AMS. ALL PATENTABLE MATERIALS CONTAINED IN THESE DOCUMENTS AND ORIGINATING WITH AMS WILL REMAIN THE SOLE PROPERTY OF AMS. THESE DRAWING, SPECIFICATIONS, AND THE MATERIAL CONTAINED HEREIN MAY NOT BE REPRODUCED, TRANSMITTED, COPIED, DISTRIBUTED, MODIFIED, OR OTHERWISE DISPOSED OF (DIRECTLY OR INDIRECTLY) AND MAY NOT BE USED (IN WHOLE OR IN PART) TO ASSIST IN THE CONSTRUCTION, DESIGN, OR OTHER MAKING OF, OR FOR THE PURPOSE OF FURNISHING ANY INFORMATION FOR THE CONSTRUCTION, DESIGN, OR OTHER MAKING OF, ANY BUILDINGS (MODULAR OR OTHERWISE), DRAWINGS, SPECIFICATIONS, PRINTS, APPARATUS, OR PARTS THEREOF, EXCEPT AS EXPRESSLY PERMITTED BY WRITTEN CONSENT OF, OR IN A WRITTEN AGREEMENT WITH, AMS. SUBMITTAL OR DISTRIBUTION TO MEET OFFICIAL REGULATORY REQUIREMENTS WILL NOT BE CONSTRUED AS PUBLICATION IN DEROGATION OF AMS'S COPYRIGHT OR OTHER INTELLECTUAL-PROPERTY OR PROPRIETARY RIGHTS.

PRE-CHECKED SET NAME

30' x 32' THRU 60' x 32'

2GO®

SITE SPECIFIC PROJECT NAME

.
.
.

APPROVED
DIV. OF THE STATE ARCHITECT
APP: 04-122041 PC
REVIEWED FOR
SS ☑ FLS ☑ ACS ☑ CG ☑
DATE: 04/05/2024

☐ 2022 CBC PRE-CHECK (PC) DOCUMENT
A SEPARATE PROJECT APPLICATION FOR CONSTRUCTION IS REQUIRED.

MANUFACTURER PROFESSIONAL OF RECORD ON PC

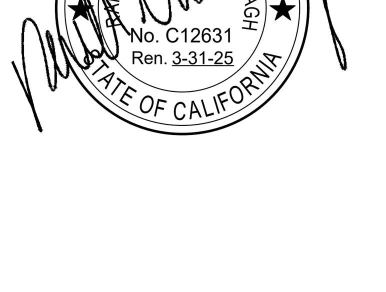

THESE DRAWINGS ARE PRELIMINARY AND NOT FOR CONSTRUCTION UNLESS STAMPED & SIGNED BY THE DESIGN PROFESSIONAL OF RECORD.

REVISIONS
△1
△2
△3
△4

DRAWN BY:	A.A.
SCALE:	AS NOTED
DATE:	DD/MM/YY
PROJECT NO:	XXXX-XX

SHEET TITLE:
GENERAL NOTES
&
SPECIFICATIONS

SHEET NUMBER:
N1.0

COORDINATION OF WORK

THE CONTRACTOR IS RESPONSIBLE FOR MAKING ALL NECESSARY ARRANGEMENTS WITH THE SCHOOL DISTRICT AUTHORIZED REPRESENTATIVE FOR ACCESS TO GROUNDS AND REMOVAL OF EQUIPMENT, IF NECESSARY. THIS CONTACT SHALL BE MADE AT LEAST 48 HOURS PRIOR TO DELIVERY OF ANY MODULE. ON-SITE INSPECTION SHALL BE DONE BY THE SITE INSPECTOR. ALL WORK WHICH THE MANUFACTURER OR HIS SUBCONTRACTORS PERFORM AT THE SITE SHALL BE SUBJECT TO THE INSPECTION OF THE SITE INSPECTOR. THE MANUFACTURER WILL FURNISH THE SITE INSPECTOR WITH SUCH INFORMATION AS MAY BE NECESSARY TO KEEP HIM FULLY INFORMED AS TO PROGRESS OF WORK AND DATES WHEN SITE WORK WILL OCCUR. THE CONTRACTOR SHALL NOTIFY THE INSPECTION AGENCY AT LEAST 48 HOURS PRIOR TO COMMENCING WORK.

THE CONTRACTOR SHALL VERIFY THAT THE DISTRICT'S SITE IS READY TO RECEIVE THE CLASSROOM(S) PRIOR TO THE DELIVERY OF ANY CLASSROOM(S) BY VISITING EACH SITE (THIS MAY BE DONE BY THE INSPECTOR).

MATERIALS AND WORKMANSHIP

1. ALL CONTRACTORS SHALL CERTIFY THAT NO ASBESTOS-CONTAINING BUILDING MATERIALS WHICH EXCEED STATE AND FEDERAL MANDATED SAFE ASBESTOS LEVELS HAVE BEEN USED IN THE CONSTRUCTION OF RELOCATABLE FACILITIES.
2. ALL WORKMEN SHALL BE SKILLED AND QUALIFIED FOR THE WORK WHICH THEY PERFORM. ALL MATERIALS USED, UNLESS OTHERWISE SPECIFIED, SHALL BE NEW AND OF THE TYPES AND GRADES SPECIFIED. THE CONTRACTOR SHALL, IF REQUESTED, FURNISH EVIDENCE SATISFACTORY TO THE RDPRC THAT SUCH IS THE CASE.
3. CONTRACTOR'S CREWS ASSIGNED TO ANY WORK PERFORMED UNDER THIS CONTRACT SHALL INCLUDE ONE COMPETENT AND FULLY EXPERIENCED PERSON DESIGNATED AS THE RESPONSIBLE PERSON IN CHARGE. SUCH PERSON MUST BE IDENTIFIED BY NAME TO THE DISTRICT IN ADVANCE OF ANY WORK. UPON REQUEST, THE CONTRACTOR SHALL PROMPTLY FURNISH TO THE DISTRICT INFORMATION RELATING TO THIS EMPLOYEE'S EXPERIENCE.
4. WORKMANSHIP SHALL BE EQUAL OR BETTER IN QUALITY TO THAT REQUIRED BY THE CONSTRUCTION TRADES FOR A FINISHED PRODUCT. A QUALITY CONTROL SUPERVISOR, DESIGNATED BY THE MANUFACTURER, SHALL REVIEW ALL WORK IN PROGRESS AND SHALL REVIEW THE FINISHED BUILDING PRIOR TO FINAL INSPECTION TO ASSURE IT IS COMPLETE AND CORRECT. THE QUALITY CONTROL SUPERVISOR SHALL HAVE THE AUTHORITY TO HAVE MATERIALS REPLACED AND WORK REDONE IN ORDER TO CORRECT FAULTY MATERIALS OR WORKMANSHIP.

GENERAL DESIGN REQUIREMENTS

1. UP TO SIX (6) MODULES, APPROXIMATELY 10 ' x 32 ', DESIGNED SO THAT THREE (3) OR MORE MODULES MAY BE JOINED TOGETHER TO FORM A COMPLETE STRUCTURE, TO MAINTAIN A POSITIVE ALIGNMENT OF FLOORS, WALLS, AND ROOF, AND TO PERMIT SIMPLE NON-DESTRUCTIVE DETACHMENT FOR FUTURE RELOCATION.
2. EACH MODULE SHALL BE PERMANENTLY IDENTIFIED WITH (2) IMPRINTED (STAMPED, NOT ENGRAVED) METAL IDENTIFICATION TAGS 3"x1-1/2" MINIMUM SIZE WITH THE FOLLOWING INFORMATION:
   A. MANUFACTURER'S NAME AND BUILDING SERIAL NUMBER.
   B. DESIGN WIND SPEED / EXPOSURE
   C. DESIGN SEISMIC S_{DS} VALUE
   D. DESIGN ROOF LIVE LOAD & SNOW LOAD.
   E. DESIGN FLOOR LIVE LOAD
   F. D.S.A. APPLICATION NUMBER
3. 2-TAGS PER MODULE: ONE ON EXTERIOR, AND ONE ON MODULE BEAM AT FRONT OF BUILDING ABOVE CEILING.
4. EACH MODULE SHALL BE CAPABLE OF RESISTING ALL VERTICAL AND LATERAL LOADS DURING TRANSPORTATION AND RELOCATION. (NORMAL INDUSTRY PRACTICE FOR BRACING MODULES DURING TRANSPORTATION AND RELOCATIONS IS ACCEPTABLE.) WHEN MODULES ARE ASSEMBLED JOINTS SHALL BE SEALED WITH REMOVABLE CLOSING STRIPS OR OTHER METHOD TO PRESENT A FINISHED APPEARANCE AND BE PERMANENTLY WATERPROOF.
5. EACH MODULE SHALL BE SUFFICIENTLY RIGID TO BE JACKED UP AT THE FRONT AND BACK CORNERS FOR RELOCATION WITHOUT DAMAGE OR THE MODULE SHALL HAVE LIFT LUGS AT FRONT AND BACK LOCATED AS REQUIRED SO THAT THE MODULE MAY BE JACKED UP FOR RELOCATION IN ONE PIECE WITHOUT ADDITIONAL SUPPORTS OF ANY TYPE. EVIDENCE OF EXCESSIVE BOWING DURING THE INSTALLATION OF THE MODULES WHICH, IN THE OPINION OF THE RDPRC, CAUSES EXCESSIVE WORKING AT ANY JOINT OR COMPROMISES THE STRUCTURAL INTEGRITY OF THE MODULE SHALL BE SUFFICIENT REASON FOR REJECTION OF THE MODULE.
6. FINISH AND BASE MATERIALS AT EACH MODULE SHALL TERMINATE AT INTERIOR MODULE JOINTS IN A MANNER TO JOIN FLUSH AND TIGHT WITH SAME MATERIAL IN ADJACENT MODULE SO THE MODULE MAY BE RELOCATED WITH MINIMUM CUTTING AND PATCHING.

MARKERBOARD SPECIFICATIONS

MARKERBOARDS SHALL BE 24 GA. PORCELAIN STEEL FACING SHEET SUITABLE TO ACCEPT DRY ERASE FELT MARKERS. THE FACING SHEET SHALL BE LAMINATED TO PARTICLE BOARD SUBSTRATE WITH A MINIMUM DENSITY OF 45lbs./cu.ft. THE PANEL SHALL HAVE A FOIL BACKING. THE PANELS SHALL HAVE EXTRUDED ALUMINUM MOLDING AND CHALKRAIL WITH A MINIMUM OF 2 15/16" PROJECTION FROM THE FACE OF PANEL. THREE MAP HOOKS WITH CLIPS PER PANEL SHALL BE PROVIDED. ONE FLAG HOLDER, 1/2" SIZE, SHALL BE PROVIDED FOR EACH CLASSROOM. EACH CLASSROOM SHALL HAVE 2 EACH 4'x8' PANELS INSTALLED SIDE BY SIDE TO MAKE A 4'x16' PANEL, CENTERED ON THE WALL.

FOR ANCHORAGE DETAIL, SEE DETAIL 8/A4.0.

REFERENCE BRANDS: CHATFIELD-CLARKE Co, Inc. SERIES 500 OR NELSON ADAMS Co. NACO SERIES 60.

INTERIOR

1. FLOOR COVERING: PER CBC SECTION 804, COMPLY WITH NFPA 253 CLASS I OR II. COMPLY WITH ASTM E 648 FOR SPECIFIC OPTICAL DENSITY SMOKE RATING NOT TO EXCEED 450. IN EXIT PASSAGEWAYS OR CORRIDORS, THE MINIMUM CRITICAL RADIANT FLUX (CBC 804.4.2) SHALL NOT BE LESS THAN CLASS II. (CARPET SHALL BE SECURELY ATTACHED, HAVE FIRM CUSHION, PAD OR BACKING, OR NONE AT ALL. PILE YARN SHALL BE BRANDED NYLON AND HAVE A LEVEL LOOP, TEXTURED LOOP, LEVEL-CUT PILE OR LEVEL-CUT/UNCUT PILE TEXTURE. THE MAXIMUM PILE HEIGHT SHALL BE 1/2" INCH. NO CROSS SEAMS SHALL BE ALLOWED. THE CARPET DENSITY SHALL BE 4600 MINIMUM. CARPET EDGE TRIM SHALL COMPLY WITH SECTION 11B-303. COLOR TO BE SELECTED BY THE RDPRC OR OWNER.)
2. BASE: RESILIENT COVE BASE - BEST QUALITY, MOULDED RUBBER, 1/8" THICK, 4" HIGH MOULDED TOP SET COVE. PROVIDE PREFORMED BASE FOR SQUARE EXTERNAL CORNERS AND PREFORMED END STOPS WHERE BASE DOES NOT ABUT. SOLID COLOR AS MANUFACTURE BY "JOHNSONITE CO.", FLEXCO, OR EQUAL. APPLY COVE TO COMPLETE PERIMETER OF CLASSROOM.

INTERIOR CONTINUE

3. INTERIOR WALLS SHALL BE VINYL COVERED TACKBOARD (U.O.N.) APPLIED IN ONE CONTINUOUS LENGTH FROM FLOOR TO CEILING. THE TACKBOARD SHALL BE INDUSTRIAL INSULATION BOARD MANUFACTURED SPECIFICALLY AS A SUBSTITUTE FOR VINYL COVERED WALL PANELS. THE BOARD SHALL BE ASPHALT FREE, SHALL HAVE AN IRONED-ON COATING AND SHALL HAVE A MINIMUM DENSITY OF 18 LBS. PER FOOT. THE VINYL COATING SHALL BE MADE OF VIRGIN VINYL CALENDERED BASE COLOR, WEIGHING A MINIMUM OF 8 OZ. PER SQUARE YARD. THE COATING BACKING SHALL BE SHEETING OR NON-WOVEN FABRIC. THE VINYL COATING SHALL BE MECHANICALLY LAMINATED, WITH THE LONG EDGES WRAPPED, TO THE TACKBOARD. TACKBOARD SHALL BE APPLIED OVER 1/2" SHEETROCK OR OSB SHEATHING. THE VINYL WALL COVERED PANEL SHALL HAVE A CLASS 'C' RATING (PER ASTM E 84 OR UL 723). FLAME SPREAD/SMOKE DEVELOPED INDEX MAXIMUMS PER NOTE #6 BELOW. THE PANEL SHALL BE APPROVED FOR CLASSROOM USE BY THE CALIFORNIA STATE FIRE MARSHAL. REFERENCE BRAND: VINYL COVERED TACKBOARD AS MANUFACTURED BY CHATFIELD-CLARKE OR COMPARABLE. CARE SHALL BE TAKEN IN MOUNTING THE TACKBOARD SO THAT THE TEXTURE OF ALL PANELS WILL HAVE THE SAME ORIENTATION AND COLOR MATCH.
4. CEILING: SUSPENDED T-BAR SYSTEM, SEE SHEET M1.4 FOR DETAILS, MATERIALS AND INSTALLATION PER ASTM C635, ASTM C636, ASTM E580, AND DSA-IR 25-2.13 AS APPLICABLE TO CLASSROOMS. PANELS SHALL BE 5/8" MINIMUM THICK, MINERAL FIBERBOARD OR VINYL-FACED FIBERGLASS LAY-IN PANELS, SQUARE EDGE, LIGHT REFLECTION 75% MINIMUM. NOISE REDUCTION COEFFICIENT OF 0.65 MINIMUM. ASTM E 84 TESTED, RATED CLASS 'C': FLAME SPREAD INDEX NOT TO EXCEED 200, SMOKE DEVELOPED INDEX RATING NOT TO EXCEED 450.
5. THE INTERIOR ENVIRONMENT SHALL BE ASSEMBLED WITH PRODUCTS THAT CONTRIBUTE TO A HEALTHY INDOOR AIR QUALITY (IAQ). THE FOLLOWING SHALL COMPLY TITLE 24, PART 11 ("CAL-GREEN"), SECTION 5.504.4. (SEE SHEET N1.0, SECTION 9C "INTERIOR AIR QUALITY CONTROL")
6. FLAME SPREAD/SMOKE-DEVELOPED INDEX (TESTED IN ACCORDANCE WITH ASTM E 84 OR UL 723, PER CBC 803.1.1):

   WALL FINISH MATERIAL (CLASS 'C')
   FLAME SPREAD MAX = 200
   SMOKE DEVELOPED MAX = 450

   PIPE INSULATION (CLASS 'A')
   FLAME SPREAD MAX = 25
   SMOKE DEVELOPED MAX = 450

   BUILDING INSULATION (CLASS 'A')
   FLAME SPREAD MAX = 25
   SMOKE DEVELOPED MAX = 450

   DUCT INSULATION (CLASS 'A')
   FLAME SPREAD MAX = 25
   SMOKE DEVELOPED MAX = 50
7. TOILET PARTITIONS: SOLID PLASTIC BY ACCURATE PARTITIONS CORP. OR EQUIVALENT w/ FLOOR ANCHORS, OVERHEAD BRACED OR EQUIVALENT. MINIMUM FLAME SPREAD RATING: 50. MINIMUM SMOKE DEVELOPMENT RATING: 450. (BY OTHERS) - TOILET PARTITIONS SHALL COMPLY WITH ACCESSIBILITY STANDARDS LISTED ON THIS PAGE.
8. INTERIOR VENTILATION: EAVE VENTS AND ATTIC VENTS SHALL BE PROVIDED WITH CORROSION-RESISTANT WIRE CLOTH SCREENING, HARDWARE CLOTH, PERFORATED VINYL OR SIMILAR MATERIAL WITH OPENINGS HAVING A LEAST DIMENSION OF NOT LESS THAN 1/16" AND NOT MORE THAN 1/4" INCH, PER C.B.C SECTION 1202.2.2.

ACCESSIBLE TOILET COMPARTMENTS:

1. TOE CLEARANCE FOR AT LEAST ONE SIDE PARTITION OF A WHEELCHAIR ACCESSIBLE COMPARTMENTS SHALL COMPLY WITH CBC SECTION AND FIGURE 11B-604.8.1.4. TOE CLEARANCE SHALL BE 9" HIGH MINIMUM ABOVE THE FINISH FLOOR AND 6" DEEP MINIMUM BEYOND THE COMPARTMENT SIDE FACE OF THE PARTITION, EXCUSIVE OF PARTITION SUPPORT MEMBERS. IT SHALL BE 12" HIGH MINIMUM ABOVE THE FINISH FLOOR FOR CHILDREN'S USE. PARTITION COMPONENTS AT TOE CLEARANCES SHALL BE SMOOTH WITHOUT SHARP EDGES OR ABRASIVE SURFACES. TOE CLEARANCE AT THE SIDE PARTITION IS NOT REQUIRED IN A COMPARTMENT GREATER THAN 66" WIDE.
2. AMBULATORY ACCESSIBLE COMPARTMENTS SHALL BE PROVIDED WHERE THERE ARE SIX OF MORE TOILET COMPARTMENTS, OR WHERE THE COMBINATION OF URINALS AND WATER CLOSETS TOTAL SIX OR MORE FIXTURES. SUCH COMPARTMENTS SHALL BE PROVIDED IN THE SAME QUANTITY AS WHEELCHAIR ACCESSIBLE COMPARTMENTS PER CBC SECTION 11B-213.3.1 AND SHALL COMPLY WITH CBC SECTION 11B-604.8.2.
3. DOOR AND DOOR HARDWARE FOR ACCESSIBLE COMPARTMENTS SHALL BE SELF-CLOSING AND SHALL COMPLY WITH CBC SECTION 11B-404 EXCEPT THAT IF THE APPROACH IS TO THE LATCH SIDE OF AN AMBULATORY COMPARTMENT DOOR, CLEARANCE BETWEEN THE DOOR SIDE OF THE COMPARTMENT AND ANY OBSTRUCTION SHALL BE 44" MINIMUM. CBC FIGURE 11B-604.8.2.
4. A DOOR PULL COMPLY WITH CBC SECTION 11B-404.2.7 SHALL BE PLACED ON BOTH SIDES OF THE ACCESSIBLE COMPARTMENT DOOR NEAT THE LATCH.
5. AMBULATORY ACCESSIBLE TOILET COMPARTMENT DOORS SHALL NOT SWING INTO THE CLEAR FLOOR SPACE OR CLEARANCE REQUIRED FOR ANY FIXTURE OR INTO THE MINIMUM REQUIRED COMPARTMENT AREA. CBC SECTION 11B-604.8.2.2
6. ELEMENTS OF SANITARY FACILITIES SHALL BE MOUNTED AT LOCATIONS IN COMPLIANCE WITH CBC SECTIONS 11B-602 THROUGH 11B-612.
7. GRAB BARS IN TOILET FACILITIES AND BATHING FACILITIES SHALL COMPLY WITH CBC SECTION 11B-609. GRAB BARS AND ANY WALL OR OTHER SURFACES ADJACENT TO GRAB BARS SHALL BE FREE OF SHARP OR ABRASIVE ELEMENTS AND SHALL HAVE ROUNDED EDGES. THE SPACE AROUND THE GRAB BARS SHALL BE AS FOLLOWS:
   - 1 ½" BETWEEN THE GRAB BAR AND THE WALL.
   - 1 ½" MINIMUM BETWEEN THE GRAB BAR AND PROJECTING OBJECTS BELOW AND THE ENDS.
   - 12"MINIMUM BETWEEN THE GRAB BAR AND PROJECTING OBJECTS ABOVE.

DOORS & WINDOWS SEE SECTION 8 PREVIOUS PAGE

1. EXTERIOR DOORS: METAL DOORS 3'-0"x7'-0" HOLLOW METAL DOOR CONSTRUCTION OF 1 SHEET OF 18 GA. GRADE II STEEL ASSEMBLED PER CS242 MINIMUM, AND REINFORCED WITH 20 GA. MINIMUM. FILL DOOR SPACES WITH MINERAL WOOL OR OTHER INSULATION. (REINFORCE BOTH FACES FOR CLOSURE.) PROVIDE FLUSH TOP ON DOORS. HARDWARE REINFORCEMENT SHALL BE 10 GA. MIN FOR HINGES, DOOR FRAME SHALL BE 16 GA. PRESSED STEEL FRAME ASTM A366 & CS242. HARDWARE REINFORCEMENT SHALL BE 10 GA. PLATE. FRAMES SHALL BE DESIGNED WITH INTEGRAL STOP AND TRIM. PROVIDE (3) ANCHORS PER JAMB PLUS ADJUSTABLE FLOOR ANCHOR. ROOMS WITH AN OCCUPANT LOAD OF FIVE OR MORE SHALL HAVE DOOR HARDWARE CAPABLE OF BEING LOCKED FROM THE INSIDE (PER CBC 1010.1.11).
2. EXTERIOR WINDOWS: PROVIDE ANODIZED ALUMINUM FRAME 5/8" MINIMUM DUAL PANE WINDOW UNITS, AS SHOWN ON FLOOR PLANS. THE 5/8" DIMENSION IS THE MINIMUM THICKNESS FOR THE DUAL GLAZED WINDOW PANEL CONSISTING OF TWO LITES OF GLASS AND THE AIR SPACE.

FOUNDATION CLEARANCES FROM SLOPES

CBC 1808A.7.1 BUILDING CLEARANCE FROM ASCENDING SLOPES. IN GENERAL, BUILDINGS BELOW SLOPES SHALL BE SET A SUFFICIENT DISTANCE FROM THE SLOPE TO PROVIDE PROTECTION FROM SLOPE DRAINAGE, EROSION AND SHALLOW FAILURES. EXCEPT AS PROVIDED IN SECTION CBC 1808A.7.5 AND FIGURE CBC 1808A.7.1, THE FOLLOWING CRITERIA WILL BE ASSUMED TO PROVIDE THIS PROTECTION. WHERE THE EXISTING SLOPE IS STEEPER THAN ONE UNIT VERTICAL IN ONE UNIT HORIZONTAL (100-PERCENT SLOPE), THE TOE OF THE SLOPE SHALL BE ASSUMED TO BE AT THE INTERSECTION OF A HORIZONTAL PLANE DRAWN FORM THE TOP OF THE FOUNDATION AND A PLANE DRAWN TANGENT TO THE SLOPE AT AN ANGLE OF 45 DEGREES (0.79 RAD) TO THE HORIZONTAL. WHERE A RETAINING WALL IS CONSTRUCTED AT THE TOE OF THE SLOPE, THE HEIGHT OF THE SLOPE SHALL BE MEASURED FROM THE TOP OF THE WALL TO THE TOP OF THE SLOPE.

CBC 1808A.7.2 FOUNDATION SETBACK FROM DESCENDING SLOPE SURFACE. FOUNDATIONS ON OR ADJACENT TO SLOPE SURFACES SHALL BE FOUNDED IN FIRM MATERIAL WITH AN EMBEDMENT AND SET BACK FROM THE SLOPE SURFACE SUFFICIENT TO PROVIDE VERTICAL AND LATERAL SUPPORT FOR THE FOUNDATION WITHOUT DETRIMENTAL SETTLEMENT. EXCEPT AS PROVIDED FOR IN SECTION CBC 1808A.7.5 AND FIGURE CBC 1808A.7.1, THE FOLLOWING SETBACK IS DEEMED ADEQUATE TO MEET THE CRITERIA. WHERE THE SLOPE IS STEEPER THAN 1 UNIT VERTICAL IN 1 UNIT HORIZONTAL 100-PERCENT SLOPE), THE REQUIRED SETBACK SHALL BE MEASURED FROM AN IMAGINARY PLANE 45 DEGREES (0.79 RAD) TO THE HORIZONTAL, PROJECTED UPWARD FROM THE TOE OF THE SLOPE.

DOORS & WINDOWS SEE SECTION 8 PREVIOUS PAGE (CONTINUATION)

3. GLAZING MATERIAL SHALL BE: EXTERIOR LITE - 3/16" MINIMUM TEMPERED GLASS OR LAMINATED AS - 1 GLASS OF SOLAR GRAY GLARE REDUCING TYPE WITH A LIGHT TRANSMISSION FACTOR OF 45% MAXIMUM. INTERIOR LITE - 1/8" MINIMUM CLEAR TEMPERED. MINIMUM AIR SPACE SHALL BE 1/4" SPACE - BENT OR SEALED CORNER ALUMINUM WITH DESICCANT FILL SEALER - BUTYL PRIMARY SEAL AND POLYSULFIDE OR SILICONE SECONDARY SEAL. CERTIFICATION - ALL GLAZING TO BE CERTIFIED IN ACCORDANCE WITH ASTM E-773, E-774.
4. HEADER HEIGHT SHALL BE THE SAME AS THE DOOR. ALL OPERABLE SASH SHALL HAVE ALUMINUM SCREENS. WINDOWS SHALL NOT BE MOUNTED TO THE EXTERIOR OSB SURFACE. ALL WINDOWS SHALL MEET THE AAMA GS101-88 VOLUNTARY SPEC. FOR ALUMINUM PRIME WINDOWS AND SLIDING GLASS (ANS1), COMMERCIAL GRADE.
5. WINDOWS TO MATCH WHAT IS REQUIRED BY ENERGY REPORT. IF WINDOWS MUST BE NFRC RATED THAN NFRC LABELS SHALL BE LEFT ON THE WINDOWS FOR THE INSPECTOR TO VERIFY.

MECHANICAL EQUIPMENT PROTECTION

1. ALL MECHANICAL EQUIPMENT SHALL BE THOROUGLY CLEANED PROGRESSIVELY DURING CONSTRUCTION AND COMPLETION OF THE JOB. ALL OPEN ENDS OF DUCTWORK AND EQUIPMENT SHALL BE COVERED AT END OF EACH WORK DAY AND DURING SHIPMENT OF RELOCATABLE BUILDINGS

FIRE EXTINGUISHER

1. EACH CLASSROOM SHALL BE EQUIPPED WITH PRESSURE TYPE FIRE EXTINGUISHERS WITH 2A10BC UL RATING. MOUNT ON THE INTERIOR WALL OF THE BUILDING NEAR THE DOORWAY(S) AT A MAXIMUM HEIGHT OF 4 FEET TO THE TOP OF THE OPERATING HANDLE, AND THE BOTTOM OF F.E. MOUNTED 27" OR LESS A.F.F. FIRE EXTINGUISHERS SHALL BE TOTALLY CHARGED AND HAVE A DIAL INDICATING THE STATE OF CHARGE.
2. FIRE EXTINGUISHER CABINETS MUST COMPLY WITH CBC SECTIONS 11B-305, 11B-307, 11B-308, AND 11B-309.

ACCESSIBILITY STANDARDS

REFERENCE: 2022 CALIFORNIA BUILDING CODE (TITLE 24, PART 2, CCR), CHAPTER 11B "ACCESSIBILITY TO PUBLIC..."

SECTION 11B-206.2 BUILDING ACCESSIBILITY, GENERAL
1. AT LEAST ONE ACCESSIBLE ROUTE SHALL CONNECT ALL BUILDINGS, ELEMENTS, AND AREAS, AND EACH FLOOR INCLUDING MEZZANINES.

SECTION 11B-216 SIGNAGE
(ALSO REFER TO SECTIONS 11B-703, 1009.9, 1009.10, 1023.9)
SIGNAGE IS REQUIRED:
1. TO IDENTIFY PERMANENT ROOMS & SPACES
2. TO PROVIDE DIRECTIONS AND INFORMATION ABOUT SPACES & FACILITIES
3. TO IDENTIFY MEANS OF EGRESS
   A. DIRECTIONS TO AN EXIT (PER 1009.10)
   B. DELAYED EGRESS LOCKS (PER 1010.1.9.7 ITEM 6)
   C. EXIT WAYS (PER 1013.4)
      - AT EACH GRADE LEVEL EXTERIOR EXIT DOOR
      - AT AN EXIT BY MEANS OF A STAIRWAY OR RAMP ("EXIT STAIR DOWN" OR "EXIT RAMP DOWN")
      - AT AN EXIT ROUTE VIA ENCLOSURE, PASSAGEWAY, CORRIDOR, HALLWAY, ETC.
      - OTHER HORIZONTAL WAYS WHERE THE EXIT OR EXIT PATH IS NOT IMMEDIATELY VISIBLE (PER 1013.1)
4. TO IDENTIFY ENTRANCES OR ROUTE TO AN ACCESSIBLE ENTRANCE
5. TO IDENTIFY TOILET ROOMS
6. TO IDENTIFY PUBLIC TELEPHONES, TTY and ASSISTIVE LISTENING SYSTEMS

POST MOUNTED SIGNS, WHERE LOCATED WITHIN AN ACCESSIBLE ROUTE, MOUNTED LESS THAN 80" ABOVE THE FINISHED FLOOR, MUST HAVE ROUNDED EDGES OR AN EASED RADIUS MINIMUM OF 0.125".

SECTION 11B-404.2.8 DOOR CLOSING SPEED
1. THE SWEEP PERIOD OF ACCESSIBLE DOORS SHALL BE 5 SECONDS MINIMUM, FROM AN OPEN DOOR POSITION OF 90 DEGREES, TO A DOOR POSITION OF 12° FROM THE LATCH.

SECTION 11B-404.2.9 DOOR OPENING FORCE
THE EFFORT TO OPEN ANY DOOR SHALL NOT EXCEED 5LBS.

SECTIONS 11B-404.2.4.3 RECESSED DOORS
1. DOORS RECESSED 8" OR MORE SHALL HAVE STRIKE EDGE CLEARANCES IN ACCORDANCE WITH FIGURE 11B-404.2.4.3.

SECTION 11B-405.5 RAMP WIDTH
1. THE CLEAR WIDTH OF A RAMP SHALL BE 48" MINIMUM.

SECTION 11B-505 HANDRAILS
1. THE TOP OF THE GRIPPING SURFACE OF HANDRAILS SHALL BE BETWEEN 34" AND 38", MEASURED VERTICALLY FROM WALKING SURFACES AND STAIR NOSINGS.
2. HANDRAILS SHALL HAVE AT LEAST 1-1/2" CLEARANCE ALONG THEIR SIDES; MAX. 20% OBSTRUCTIONS ON THEIR BOTTOMS (11B-505.6).
3. HANDRAILS SHALL EXTEND BEYOND, AND IN THE SAME DIRECTION, OF STAIRS AND RAMPS.

SECTION 11B-606.4 WATER CONTROLS
1. CONTROLS TO OPERATE A WATER FAUCET OR OUTLET SHALL BE A SINGLE-LEVER DESIGN, CAPABLE OF BEING OPERATED WITH A SINGLE HAND, AND SHALL NOT REQUIRE TIGHT GRASPING, PINCHING, OR TWISTING OF THE WRIST.
2. THE FORCE REQUIRED TO OPERATE CONTROLS SHALL NOT EXCEED 5 LBS.

SECTION 11B-604 TOILET ROOMS AND BATHING ROOMS
1. AN ACCESSIBLE TOILET STALL SHALL HAVE A MINIMUM WIDTH OF 60" AND SHALL BE EQUIPPED WITH A DOOR THAT HAS AN AUTOMATIC-CLOSING DEVICE, AND SHALL HAVE A CLEAR, UNOBSTRUCTED OPENING WIDTH OF 32 INCHES WHEN LOCATED AT THE END AND 34 INCHES WHEN LOCATED AT THE SIDE, WITH THE DOOR POSITIONED AT AN ANGLE OF 90 DEGREES FROM ITS CLOSED POSITION.
2. THE INSIDE AND OUTSIDE OF THE ACCESSIBLE COMPARTMENT DOOR SHALL BE EQUIPPED WITH A LOOP OR U-SHAPED HANDLE IMMEDIATELY BELOW THE LATCH. THE LATCH SHALL BE FLIP-OVER STYLE, SLIDING OR OTHER HARDWARE NOT REQUIRING THE USER TO GRASP OR TWIST. THE LATCH AND PULL SHALL COMPLY WITH 11B-404.2.7. MAXIMUM 5 LB FORCE TO ACTIVATE (11B-309.4).
3. EXCEPT FOR DOOR-OPENING WIDTHS AND DOOR SWINGS, A CLEAR, UNOBSTRUCTED ACCESS OF NOT LESS THAN 44 INCHES SHALL BE PROVIDED TO THE WATER CLOSET COMPARTMENTS DESIGNED FOR USE BY PERSONS WITH DISABILITIES.
4. A 27"-29" MINIMUM DIMENSION IS REQUIRED FOR LAVATORY/SINK KNEE CLEARANCE, WHICH IS THE DISTANCE FROM THE FINISH FLOOR TO THE UNDERSIDE OF THE LAVATORY/SINK AND THE LAV FRONT EDGE.
5. TABLE 11B-604.9 SUGGESTS DIMENSIONS FOR CHILDREN'S USE.
6. TOILET ACCESSORIES LOCATED IN THE CIRCULATION PATH AND WITH THE BOTTOM MOUNTED ABOVE 27", SHALL PROJECT MAX. 4" FROM WALL OR PARTITION. (11B-307.2).

FIG. 1808A.7.1

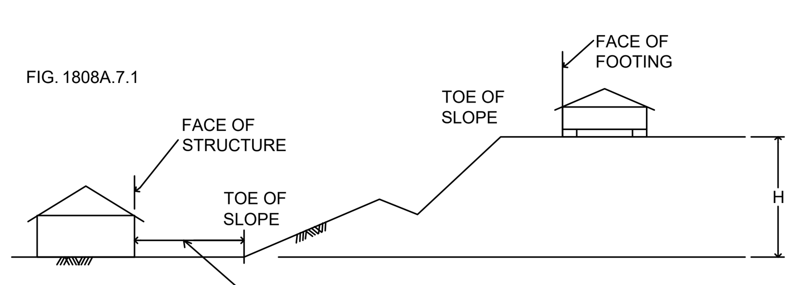

FOR SI: 1 FOOT=304.8 MM.

OUTDOOR VENTILATION REQUIREMENTS:

1. CLASSROOMS ARE DESIGNED FOR MINIMUM OUTSIDE AIR OF 0.38 CFM PER SF. PER THE CALIFORNIA ENERGY CODE (CEC), SPACES SHALL BE DESIGNED TO THE MINIMUM REQUIREMENTS AS SPECIFIED OR TO 15 CFM PER OCCUPANT, WHICHEVER IS GREATER. THE BUILDING MANUFACTURER SHALL VERIFY WITH THE SCHOOL DISTRICT THE EXPECTED NUMBER OF OCCUPANTS IN THE CLASSROOM SO THAT THE OUTDOOR VENTILATION RATE FOR MECHANICAL SYSTEMS CAN BE ADEQUATELY ADJUSTED UPON SITE INSTALLATION OF THE BUILDING. THE BUILDING MANUFACTURER SHALL ALSO CONFIRM WITH HVAC EQUIPMENT MANUFACTURER THAT THE SELECTED EQUIPMENT WILL BE ABLE TO PERFORM TO ACCOMMODATE THE ADDITIONAL OUTDOOR AIR REQUIREMENTS UNDER PEAK DESIGN CONDITIONS FOR THE CLIMATE ZONE IN WHICH THE BUILDING IS LOCATED. AT OCCUPANCY, THE BUILDING MANUFACTURER SHALL PROVIDE TO BUILDING OWNER A DESCRIPTION OF THE QUANTITIES OF OUTDOOR AND RECIRCULATED AIR THAT THE VENTILATION SYSTEMS ARE DESIGNED TO PROVIDE TO EACH AREA.

FASTENERS FOR ATTACHMENT TO STEEL

1. SCREWS FOR STEEL TO STEEL & WOOD TO STEEL CONNECTIONS SHALL BE SELF-DRILLING, SELF-TAPPING SCREWS (SDSTS) PER ASTM C1513, UON.
   A. HEAD TYPE AS REQUIRED FOR APPLICATION.
   B. SCREW LENGTHS TO HAVE 3 EXPOSED THREADS MIN.
2. SHOT PINS SPECIFIED FOR PLYWOOD DIAPHRAM TO STEEL CONNECTIONS SHALL BE ET&F PINS PER IAPMO UES REPORT ER-0335.
3. SHOT PINS FOR ATTACHMENT OF 2X WOOD OR LIGHT GAUGE STEEL MEMBERS TO STRUCTURAL STEEL SHALL BE BY HILTI UNO.

GENERAL NOTE

IT IS THE RESPONSIBILITY OF THE DESIGN PROFESSIONAL ON RECORD TO ENSURE THAT ALL SPECIFICATIONS MEET THE MINIMUM REQUIREMENTS OF THE CURRENT EDITION S OF THE CALIFORNIA STATE TITLES 19 AND 24. APPROVAL OF THESE SPECIFICATIONS DOES NOT CONSTITUTE APPROVAL FOR WAIVER OR ANY REQUIREMENTS OF THOSE REGULATIONS.

ABBREVIATION LEGEND

A	ACCESSIBLE
AC	ASPHALT CONCRETE
A/C	AIR CONDITIONING
ACI	AMERICAN CONCRETE INSTITUTE
ACOUS	ACOUSTICAL
ADD	ADDENDUM
ADD'L	ADDITIONAL
ADJ	ADJUSTABLE OR ADJACENT
AISC	AMERICAN INSTITUTE OF STEEL CONSTRUCTION
AISI	AMERICAN IRON AND STEEL INSTITUTE
ALT	ALTERNATE
ALUM	ALUMINUM
ANSI	AMERICAN NATIONAL STANDARDS INSTITUTE
ARCH	ARCHITECT(URAL)
ASTM	AMERICAN SOCIETY FOR TESTING AND MATERIALS
AWC	AMERICAN WOOD COUNCIL
AWPA	AMERICAN WOOD PROTECTION ASSOCIATION
AWS	AMERICAN WELDING SOCIETY
BD	BOARD
BLDG	BUILDING
BLK	BLOCK
BLKG	BLOCKING
BLW	BELOW
BM	BEAM
BN	BOUNDARY NAILING
BOT/BOTT	BOTTOM
BTWN	BETWEEN
BUR	BUILT UP ROOFING
C	CARPET
CAB	CABINET
CB	CATCH BASIN
CBC	CALIFORNIA BUILDING CODE
CCR	CALIFORNIA CODE OF REGULATIONS
CEM	CEMENT
CF	CUBIC FOOT
CJ	CONTROL JOINT
CJP	COMPLETE JOINT PENETRATION
CLG	CEILING
CLR	CLEAR
CT	CERAMIC TILE
CMU	CONCRETE MASONRY UNIT
CNEL	COMMUNITY NOISE EQUIVALENT LEVEL
CO	CLEAN OUT
COL	COLUMN
CONC	CONCRETE
CONN	CONNECTION
CONT	CONTINUOUS
CSK	COUNTERSINK
CTRD	CENTERED
CW	COLD WATER
DBL	DOUBLE
DET	DETAIL
DF	DRINKING FOUNTAIN OR DOUGLAS FIR
DIA	DIAMETER
DIAG	DIAGONAL
DIM	DIMENSION
DIV	DIVISION
DR	DOOR
DS	DOWNSPOUT
DSA	DIVISION OF THE STATE ARCHITECT
DWG	DRAWING
(E)	EXISTING
EA	EACH
EJ	EXPANSION JOINT
ELEV	ELEVATION
ELECT	ELECTRICAL
EMBED	EMBEDMENT
EMT	ELECTRICAL MAGNETIC TUBING
EN	EDGE NAILING
ETC	ET CETERA
EQ	EQUAL
EW	EACH WAY
EXP	EXPOSURE
EXT	EXTERIOR
F	FAHRENHEIT
FUT	FUTURE
FAB	FABRICATION
FAC	FACTORY
FD	FLOOR DRAIN
FF	FINISHED FLOOR
FHWS	FLAT HEAD WOOD SCREW
FIN	FINISH
FLR	FLOOR
FLSHG	FLASHING
FN	FIELD NAILING
FND/FNDN	FOUNDATION
FOC	FACE OF CONCRETE
FOCOL	FACE OF COLUMN
FOF	FACE OF FINISH
FOP	FACE OF PLYWOOD
FOS	FACE OF STUD

FRP	FIBERGLASS REINFORCED PLASTIC PANELS
FT	FOOT
FTG	FOOTING
FURR	FURRED (-ING)
GA	GAUGE
GB	GYPSUM BOARD
GL	GLASS OR GLAZING
GLV/GALV	GALVANIZED
GSM	GALVANIZED SHEET METAL
GYP	GYPSUM
GYP.BD.	GYPSUM BOARD
HB	HOSE BIBB
H.C.	HOLLOW CORE
HDR	HEADER
HDW	HARDWOOD
HF	HEM FIR
HM	HOLLOW METAL (STEEL)
HOR/HORIZ	HORIZONTAL
HSS	HOLLOW STRUCTURAL SECTION (STEEL)
HT	HEIGHT
HVAC	HEATING VENTILATING AIR CONDITIONING
HW	HOT WATER
IAPMO	INTERNATIONAL ASSOCIATION OF PLUMBING AND MECHANICAL OFFICIALS
ICC	INTERNATIONAL CODE COUNCIL
ID	INSIDE DIAMETER
IN	INCH
INSUL	INSULATE (D), (ION)
INT	INTERIOR
INV	INVERT
IR	INTERPRETATION OF REGULATIONS
ISA	INTERNATIONAL SYMBOL OF ACCESSIBILITY/ACCESS
JT	JOINT
KSI	KIPS PER SQUARE INCH (KIPS = 1,000LBS)
LAM	LAMINATE(D)
LAV	LAVATORY
LB, LBS	POUND
LLH	LONG LEG HORIZONTAL
LLV	LONG LEG VERTICAL
LNDG	LANDING
LONG	LONGITUDINAL
LS	LAG SCREW
LT	LIGHT
LW	LIGHT WEIGHT
LWC	LIGHT WEIGHT CONCRETE
MATL	MATERIAL
MAX	MAXIMUM
MB	MECHANICAL BOLT
MECH	MECHANICAL
MFG	MANUFACTURING
MFR	MANUFACTURER
MIN	MINIMUM
MIR	MIRROR
MISC	MISCELLANEOUS
MM	MILLIMETER
MTL	METAL
(N)	NEW
NIC	NOT IN CONTRACT
NDS	NATIONAL DESIGN SPECIFICATION
NW	NORMAL WEIGHT
NWC	NORMAL WEIGHT CONCRETE
O/	OVER
OC	ON CENTER
OD	OUTSIDE DIAMETER
OH	OPPOSITE HAND OR OVERHANG
OL	OCCUPANT LOAD
OPG	OPENING
OPP	OPPOSITE
OSB	ORIENTED STRAND BOARD
PAF	POWER-ACTUATED FASTENER
PL	PROPERTY LINE
PLAM	PLASTIC LAMINATE
PLAS	PLASTER
PLF	POUNDS PER LINEAR FOOT
PLT	PLATE
PLWD/PLY	PLYWOOD
PNL	PANEL
POC	POINT OF CONNECTION
PS	PRODUCT STANDARD
PSF	POUNDS PER SQUARE FOOT
PSI	POUNDS PER SQUARE INCH
PSL	PARALLEL STRAND LUMBER
PT	PRESSURE TREATED
PTDF	PRESERVATIVE TREATED DOUGLAS FIR
PTN	PARTITION
PVC	POLYVINYL CHLORIDE
R	RISER
RD	ROOF DRAIN
RDPRC	REGISTERED DESIGN PROFESSIONAL IN RESPONSIBLE CHARGE

RDWD	REDWOOD
REF	REFERENCE
REFR	REFRIGERATOR
REINF	REINFORCING
REQ'D/REQ	REQUIRED
RES	RESILIENT
RDWD	REDWOOD
RWL	RAIN WATER LEADER
SCH/SCHED	SCHEDULE
SD	STORM DRAIN
SDSTS	SELF DRILLING SELF TAPPING SCREW
SEC	SECTION
SEP	SEPARATION
SF	SQUARE FEET
SHT	SHEET
SHTG	SHEATHING
SIM	SIMILAR
SMS	SHEET METAL SCREW
SP	STRUCTURAL PLYWOOD
SPEC	SPECIFICATIONS
SQ	SQUARE
SS	STAINLESS STEEL
STAGG	STAGGERED
STN	STAIN
STD	STANDARD
STL	STEEL
STS	SELF TAPPING SCREW
STSMS	SELF TAPPING SHEET METAL SCREW
T&B	TOP AND BOTTOM
T&G	TONGUE AND GROOVE
TEMP	TEMPERED
THRU	THROUGH
TJ	TOOL JOINT
TOC	TOP OF CURB, CRICKET, OR CONCRETE
TOP	TOP OF PARAPET
TOS	TOP OF SLAB, SHEATHING, OR STEEL
TOW	TOP OF WALL
TRANS	TRANSVERSE
TS	TOP OF SHEATHING
TV	TELEVISION
TYP	TYPICAL
UON	UNLESS OTHERWISE NOTED
UNO	UNLESS NOTED OTHERWISE
VAR	VARIES
VCT	VINYL COMPOSITION TILE
VCTB	VINYL COVERED TACKBOARD
VERT	VERTICAL
VOC	VOLATILE ORGANIC COMPOUND(S)
VFY	VERIFY
VIF	VERIFY IN FIELD
VWC	VINYL WALL COVERING
W/	WITH
WD	WOOD
WF	WIDE FLANGE
WIN	WINDOW
W/O	WITHOUT
WS	WOODSCREW
WSCT	WAINSCOT
WT	WEIGHT
WWF	WELDED WIRE FABRIC
∠	ANGLE
@	AT
℄	CENTER LINE
Ø	DIAMETER
°	DEGREES
M/L	MODULE LINE
±	PLUS/MINUS

IDENTIFICATION STAMP
DIV. OF THE STATE ARCHITECT
APP: 02-122533 INC:
REVIEWED FOR
SS ☑ FLS ☑ ACS ☑
DATE: 05/22/2024

American Modular Systems
787 Spreckels Ave., Manteca, CA 95336
Phone (209) 825-1921 Fax (209) 825-7018
www.americanmodular.com

INTELLECTUAL-PROPERTY & PROPRIETARY RIGHTS STATEMENT
COPYRIGHT © AMERICAN MODULAR SYSTEMS (AMS)
AMS OWNS ALL COPYRIGHT AND OTHER INTELLECTUAL-PROPERTY AND PROPRIETARY RIGHTS IN THESE DRAWINGS, SPECIFICATIONS, AND THE MATERIAL CONTAINED HEREIN. CERTAIN ELEMENTS SHOWN IN THESE DOCUMENTS ARE REGISTERED TRADEMARKS OF AMS. ALL PATENTABLE MATERIALS CONTAINED IN THESE DOCUMENTS AND ORIGINATING WITH AMS WILL REMAIN THE SOLE PROPERTY OF AMS. THESE DRAWING, SPECIFICATIONS, AND THE MATERIAL CONTAINED HEREIN MAY NOT BE REPRODUCED, TRANSMITTED, COPIED, DISTRIBUTED, MODIFIED, OR OTHERWISE DISPOSED OF (DIRECTLY OR INDIRECTLY) AND MAY NOT BE USED (IN WHOLE OR IN PART) TO ASSIST IN THE CONSTRUCTION, DESIGN, OR OTHER MAKING OF, OR FOR THE PURPOSE OF FURNISHING ANY INFORMATION FOR THE CONSTRUCTION, DESIGN, OR OTHER MAKING OF, ANY BUILDINGS (MODULAR OR OTHERWISE), DRAWINGS, SPECIFICATIONS, PRINTS, APPARATUS, OR PARTS THEREOF, EXCEPT AS EXPRESSLY PERMITTED BY WRITTEN CONSENT OF, OR IN A WRITTEN AGREEMENT WITH, AMS. SUBMITTAL OR DISTRIBUTION TO MEET OFFICIAL REGULATORY REQUIREMENTS WILL NOT BE CONSTRUED AS PUBLICATION IN DEROGATION OF AMS'S COPYRIGHT OR OTHER INTELLECTUAL-PROPERTY OR PROPRIETARY RIGHTS.

PRE-CHECKED SET NAME

30' x 32' THRU 60' x 32'

2GO®

SITE SPECIFIC PROJECT NAME

.
.
.

APPROVED
DIV. OF THE STATE ARCHITECT
APP: 04-122041 PC
REVIEWED FOR
SS ☑ FLS ☑ ACS ☑ CG ☑
DATE: 04/05/2024

☐ 2022 CBC PRE-CHECK (PC) DOCUMENT
A SEPARATE PROJECT APPLICATION FOR CONSTRUCTION IS REQUIRED.

MANUFACTURER PROFESSIONAL OF RECORD ON PC

LICENSED ARCHITECT
RANDALL PATRICK CAVANAGH
No. C12631
Ren. 3-31-25
STATE OF CALIFORNIA

THESE DRAWINGS ARE PRELIMINARY AND NOT FOR CONSTRUCTION UNLESS STAMPED & SIGNED BY THE DESIGN PROFESSIONAL OF RECORD.

REVISIONS

1	
2	
3	
4	

DRAWN BY:	A.A.
SCALE:	AS NOTED
DATE:	DD/MM/YY
PROJECT NO:	XXXX-XX

SHEET TITLE:

GENERAL NOTES & SPECIFICATIONS

SHEET NUMBER:

N2.0

DOOR SCHEDULE

DOORS							FRAMES			
DOOR NO.	DOOR TYPE	DOOR SIZE	QUANTITY	MATERIAL	FINISH	HARDWARE SET NO.	FRAME TYPE	MATERIAL	FINISH	REMARKS
1	D1	3'-0" x 7'-0"	2	HM	PT	A	F1	S	PT	HARDWARE LOCKABLE FROM THE INSIDE, SEE DOOR NOTE #3

DOOR ABBREVIATIONS

HM - HOLLOW METAL
AL - ALUMINUM
S - STEEL
SST - STAINLESS STEEL
STL - STEEL FRAME, 16ga. FULLY WELDED
WWF - WINDOW WALL FRAME

SC - SOLID CORE WOOD
HC - HOLLOW CORE WOOD
PT - PAINTED
CA - CLEAR ANODIZED
BR - BRONZE ANODIZED
CLR - CLEAR FINISH

DOOR NOTES

1. DOORS SHALL COMPLY WITH C.B.C. SECTION 1010.
2. CLASSROOMS ≥ 1000 S.F WILL REQUIRE PANIC HARDWARE THAT COMPLIES WITH C.B.C. SECTION 1010.2.9.
3. PER C.B.C. 1010.2.8.2: PROVIDE LOCKS THAT ALLOW DOORS TO CLASSROOMS AND ANY ROOM WITH AN OCCUPANCY OF FIVE OR MORE PERSONS TO BE LOCKED FROM THE INSIDE. LOCKS SHALL COMPLY WITH C.B.C. SECTION 1010.2.

WINDOW SCHEDULE

WINDOW TYPE	QTY.	FUNCTION	'W' WIDTH	'H' HEIGHT	FINISH	GLASS TYPE	U FACTOR	SHGC	VLT MIN	MIN STC RATING	REMARKS
A	4	FIXED	8'-0"	4'-0"	CLEAR ANODIZED	SOLAR GREY[6]	0.42	0.25	0.44	27	INOPERABLE

1. EXTERIOR LITE - 3/16" MINIMUM TEMPERED GLASS, OR LAMINATED AS 1 GLASS OF SOLAR GRAY GLARE REDUCING TYPE WITH A LIGHT TRANSMISSION FACTOR OF 45% MAXIMUM.
2.
3. WINDOWS THAT MEETS ALL OF THE FOLLOWING CONDITIONS SPECIFIED IN SECTION 2406.4.3, SHALL BE CONSIDERED A HAZARDOUS LOCATION:
   A. THE EXPOSED AREA OF AN INDIVIDUAL PANE IS GREATER THAN 9 SQUARE FEET.
   B. THE BOTTOM EDGE OF THE GLAZING IS LESS THAN 18" ABOVE FINISH FLOOR.
   C. THE TOP EDGE OF THE GLAZING IS GREATER THAN 36" ABOVE FINISH FLOOR.
   D. ONE OR MORE WALKING SURFACE(S) ARE WITHIN 36", MEASURED HORIZONTALLY AND IN A STRAIGHT LINE, OF THE PLANE OF THE GLAZING.
3. WINDOWS THAT ARE CONSIDERED A HAZARDOUS LOCATION SHALL CONTAIN FULLY TEMPERED SAFETY GLAZING & MEET THE FOLLOWING REQUIREMENTS:
   A. PASS THE IMPACT TEST REQUIREMENTS IN ACCORDANCE WITH "CPSC 16 CFR PART 1201" PER SECTION 2406.2, WITH A TEST CRITERIA OF CATEGORY II, UNLESS OTHERWISE INDICATED IN C.B.C. TABLE 2406.2(1).
   B. IDENTIFICATION OF SAFETY GLAZING PER C.B.C. 2406.3
4. ALL WINDOWS SHALL HAVE METAL FRAMES AND BE MANUFACTURED BY OTHERS.
5. NOT USED
6. THE MINIMUM STANDARD GLASS TYPE FOR ALL WINDOWS SHALL SOLAR GREY GLAZING. UPGRADED GLAZING (LOW E, LOW E2, ETC.) MAY BE USED PER SITE SPECIFIC REQUIREMENTS.
7. TEMPORARY NFRC LABELS SHALL STAY ON WINDOWS UNTIL PROJECT INSPECTOR HAS VERIFIED INSTALLED FENESTRATION MATCHES WINDOW SCHEDULE ON PLANS.

FINISHES

ROOM NUMBER	ROOM NAME	FLOOR	BASE	WALLS FRONT	WALLS REAR	WALLS RIGHT	WALLS LEFT	CEILING	CEILING HEIGHT	REMARKS
101	CLASSROOM	A	D	F	F	F	F	K	8'-6"	

FINISH INDICATOR OPTIONS

A - PATCRAFT BROADLOOM CARPET; PER STATE OF CALIF SPEC COMPLYING WITH GROUP 1, TYPE A OR TYPE B, CLASS 2, DENSITY 4600.
B - VINYL SHEET FLOORING; 0.6 MIN, C.D.F. PER ASTM D 2047
C - VCT; ARMSTRONG, STANDARD, OR EXCELON.
D - TOP SET BASE; 4"
E - TOP SET BASE; 6"
F - WALL FINISH; 1/2" VINYL TACKBOARD CLASS 1 OVER 1/2" GYP BOARD BACKING
G - 1/2" W.R. GYP BOARD; TAPE, PAINTED FINISH
H - 1/2" GYP BOARD; TAPE, PAINTED FINISH
J - 3/32" F.R.P.; OVER 1/2" W.R. GYP BOARD
K - ACOUSTICAL LAY-IN GRID CEILING PANELS; 2'x2' OR 2'x4'
L - 1/2" VINYL TACKBOARD; CLASS 1, OVER 5/8" TYPE "X" GYP BOARD BACKING
M - 5/8" TYPE 'X' GYP BOARD; TAPE, TEXTURE, PAINTED FINISH
N - CERAMIC TILE - (FULL HEIGHT AT WALLS)

ALL INTERIOR FINISHES SHALL COMPLY WITH CFC, CBC & TITLE 19

DOOR TYPES

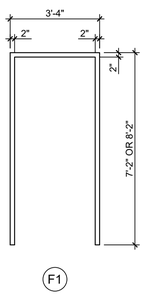

WINDOW TYPES

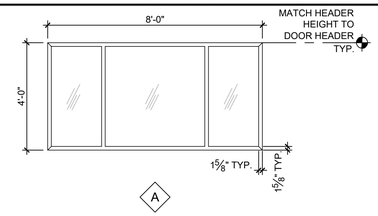

IDENTIFICATION OF GLASS & SAFETY GLAZING PER CBC CHAPTER 24

NOTE: WINDOWS ARE INOPERABLE.

WINDOW GLAZING AREA TABLE			
BUILDING SIZE (FT)	MAX ALLOWED AREA AT FRONT (SQ FT)**	MAX ALLOWED AREA AT REAR (SQ FT)**	MAX TOTAL ALLOWED AREA(SQ FT)*
30'x32'	160	80	240
40'x32'	160	160	320
50'x32'	160	160	320
60'x32'	160	160	320

** MAX SQUARE FOOTAGES ALLOWED CAN BE ALTERNATED FROM FRONT TO REAR OR REAR TO FRONT BUT NO COMBINED.

* WINDOW PLACEMENT & SIZE MAY VARY AS TITLE 24 MODEL REFLECTS THE LARGEST WINDOW OPTION.
THE TOTAL WINDOW AREA OF ANY BUILDING MAY NOT EXCEED THE MAXIMUM ALLOWED WINDOW AREA (SQ. FT.) LISTED IN THE TABLE ABOVE.
IF A BUILDING EXCEEDS THE MAXIMUM AREA, A PROJECT SPECIFIC TITLE 24 REPORT SHALL BE PROVIDED

ROOM FINISHES SCHEDULE

DOOR FRAME TYPES

A	EXTERIOR DOOR LOCKSET w/LEVER RHODES SCHLAGE ND95PD - CLASSROOM LOCK
B	EXTERIOR DOOR PANIC BAR w/PULL ON EXTERIOR VON DUPRIN AX22NL-LD (REQUIRED WHEN OCCUPANT LOAD IS 50 0R MORE)
C	INTERIOR PASSAGE COPPER CREEK 6220-PASSAGE w/ LEVER
D	INTERIOR RESTROOM COPPER CREEK 6231-RESTROOM w/ LEVER. REQUIRED TO BE LOCKABLE FROM THE INSIDE.
E	INTERIOR ENTRY/OFFICE COPPER CREEK 6241-ENTRY/OFFICE w/ LEVER
F	INTERIOR STOREROOM COPPER CREEK 6250-STOREROOM w/ LEVER
G	INTERIOR CLASSROOM COPPER CREEK 6260-CLASSROOM w/ LEVER
H	EXTERIOR DOOR LOCKSET w/LEVER & PUSH BUTTON RHODES SCHLAGE ND85PD - SINGLE USER RESTROOM LOCK
I	EXTERIOR DOOR LOCKSET w/LEVER RHODES SCHLAGE ND70PD - MULTI-ACCOMODATION RESTROOM LOCK
J	EXTERIOR DOOR LOCKSET w/LEVER RHODES SCHLAGE ND80PD - STOREROOM LOCK

EXTERIOR DOOR HARDWARE

1. HINGES: HAGER 4-1/2x4-1/2 BUTTS, BB1279 US26D, 1-1/2 PAIR PER DOOR, WITH SET SCREW IN BARREL AND BALL BEARING DESIGN.
2. CLOSER: NORTON 8500DA OR 8500BF SERIES, LCN 1460 DEL SERIES OR EQUAL. (5 LBS. MAX. PRESSURE) HARDWARE IS PROVIDED WITH A CLOSER
3. WEATHERSTRIPPING: ALL EXTERIOR DOORS SHALL BE WEATHERSTRIPPED WITH PEMKO 299D, ULTRA WS007 OR EQUAL, AT DOOR JAMBS AND HEAD.
4. THRESHOLD: THRESHOLD SHALL BE PEMKO 271 AV 5" ALUMINUM WITH PEMKO 216 AV ULTRA TH042 DOOR BOTTOM.
5. LOCKDOWN: INTERIOR TEACHERS' MANUAL LOCK FOR CAMPUS LOCK DOWN CRITERIA - REQUIRED FOR STATE-FUNDED SCHOOLS, PER EDUCATION CODE SECTION 17075.50 (AND ALSO CBC 1010.1.11): PROVIDE LOCKS THAT ALLOW DOORS TO CLASSROOMS AND ANY ROOM WITH AN OCCUPANCY OF FIVE OR MORE PERSONS TO BE LOCKED FROM THE INSIDE. LOCKS SHALL COMPLY WITH C.B.C. SECTION 1010.1.9.

DOOR HARDWARE NOTES (HARDWARE SHALL BE MOUNTED 34" MIN - 44" MAX A.F.F. FOR ALL DOOR HARDWARE)

1. 11B-404.2.3 CLEAR WIDTH
   DOOR OPENINGS SHALL PROVIDE A CLEAR WIDTH OF 32 INCHES (813 MM) MINIMUM. CLEAR OPENINGS OF DOORWAYS WITH SWINGING DOORS SHALL BE MEASURED BETWEEN THE FACE OF THE DOOR AND THE STOP, WITH THE DOOR OPEN 90 DEGREES. OPENINGS MORE THAN 24 INCHES (610 MM) DEEP SHALL PROVIDE A CLEAR OPENING OF 36 INCHES (914 MM) MINIMUM. THERE SHALL BE NO PROJECTIONS INTO THE REQUIRED CLEAR OPENING WIDTH LOWER THAN 34 INCHES (864 MM) ABOVE THE FINISH FLOOR OR GROUND. PROJECTIONS INTO THE CLEAR OPENING WIDTH BETWEEN 34 INCHES (864 MM) AND 80 INCHES (2032 MM) ABOVE THE FINISH FLOOR OR GROUND SHALL NOT EXCEED 4 INCHES (102 MM).

   EXCEPTIONS:
   1. IN ALTERATIONS, A PROJECTION OF 5/8 INCH (15.9 MM) MAXIMUM INTO THE REQUIRED CLEAR WIDTH SHALL BE PERMITTED FOR THE LATCH SIDE STOP.
   2. DOOR CLOSERS AND DOOR STOPS SHALL BE PERMITTED TO BE 78 INCHES (1981 MM) MINIMUM ABOVE THE FINISH FLOOR OR GROUND.
2. HANDLES, PULLS, LATCHES, LOCKS AND OTHERS OPERABLE PARTS ON DOORS SHALL BE OPERABLE WITH ONE HAND AND SHALL NOT REQUIRE TIGHT GRASPING, PINCHING OR TWISTING OF THE WRIST. THE FORCE REQUIRED TO ACTIVATE OPERABLE PARTS SHALL BE 5 lbs. MAX. (11B-404.2.7, 11B-309.4)
3. DOORS SHALL BE OPERABLE FROM INSIDE WITH A SINGLE MOTION W/O THE USE OF ANY TOOLS, EFFORT, OR SPECIAL KNOWLEDGE.
4. EMERGENCY EXIT AND PANIC HARDWARE
   EMERGENCY EXIT AND PANIC HARDWARE SHALL COMPLY WITH SFM STANDARD 12-10-3, SECTION 12-10-302
   A) THE CROSS-BAR SHALL EXTEND ACROSS NOT LESS THAN ONE-HALF THE WIDTH OF THE DOOR/GATE
   D) THE ENDS OF THE CROSS-BAR SHALL BE CURVED, GUARDED OR OTHERWISE DESIGNED TO PREVENT CATCHING ON THE CLOTHING OF PERSONS DURING EGRESS.

*ADDITIONAL DOORS MAY BE REQUIRED BASED ON BUILDING LAYOUT.

DOOR HARDWARE SCHEDULE

IDENTIFICATION STAMP
DIV. OF THE STATE ARCHITECT
APP: 02-122533 INC:
REVIEWED FOR
SS ☑ FLS ☑ ACS ☑
DATE: 05/22/2024

American Modular Systems
787 Spreckels Ave., Manteca, CA 95336
Phone (209) 825-1921 Fax (209) 825-7018
www.americanmodular.com

INTELLECTUAL-PROPERTY & PROPRIETARY RIGHTS STATEMENT
COPYRIGHT © AMERICAN MODULAR SYSTEMS (AMS)
AMS OWNS ALL COPYRIGHT AND OTHER INTELLECTUAL-PROPERTY AND PROPRIETARY RIGHTS IN THESE DRAWINGS, SPECIFICATIONS, AND THE MATERIAL CONTAINED HEREIN. CERTAIN ELEMENTS SHOWN IN THESE DOCUMENTS ARE REGISTERED TRADEMARKS OF AMS. ALL PATENTABLE MATERIALS CONTAINED IN THESE DOCUMENTS AND ORIGINATING WITH AMS WILL REMAIN THE SOLE PROPERTY OF AMS. THESE DRAWING, SPECIFICATIONS, AND THE MATERIAL CONTAINED HEREIN MAY NOT BE REPRODUCED, TRANSMITTED, COPIED, DISTRIBUTED, MODIFIED, OR OTHERWISE DISPOSED OF (DIRECTLY OR INDIRECTLY) AND MAY NOT BE USED (IN WHOLE OR IN PART) TO ASSIST IN THE CONSTRUCTION, DESIGN, OR OTHER MAKING OF, OR FOR THE PURPOSE OF FURNISHING ANY INFORMATION FOR THE CONSTRUCTION, DESIGN, OR OTHER MAKING OF, ANY BUILDINGS (MODULAR OR OTHERWISE), DRAWINGS, SPECIFICATIONS, PRINTS, APPARATUS, OR PARTS THEREOF, EXCEPT AS EXPRESSLY PERMITTED BY WRITTEN CONSENT OF, OR IN A WRITTEN AGREEMENT WITH, AMS. SUBMITTAL OR DISTRIBUTION TO MEET OFFICIAL REGULATORY REQUIREMENTS WILL NOT BE CONSTRUED AS PUBLICATION IN DEROGATION OF AMS'S COPYRIGHT OR OTHER INTELLECTUAL-PROPERTY OR PROPRIETARY RIGHTS.

PRE-CHECKED SET NAME
30' x 32' THRU 60' x 32'
2GO

SITE SPECIFIC PROJECT NAME
GALT JOINT UESD
VERNON GREER ES
(2) 30'X32' BUILDINGS

MANUFACTURER PROFESSIONAL OF RECORD ON PC
LICENSED ARCHITECT
PATRICK HOWARD
No. C12631
Ren. 3-31-25
STATE OF CALIFORNIA

THESE DRAWINGS ARE PRELIMINARY AND NOT FOR CONSTRUCTION UNLESS STAMPED & SIGNED BY THE DESIGN PROFESSIONAL OF RECORD.

REVISIONS
1
2
3
4

DRAWN BY:	A.V.
SCALE:	AS NOTED
DATE:	01/04/24
PROJECT NO:	1878-24

SHEET TITLE:
TYPICAL SCHEDULES
DOORS, WINDOWS
& FINISHES

SHEET NUMBER:
N3.0

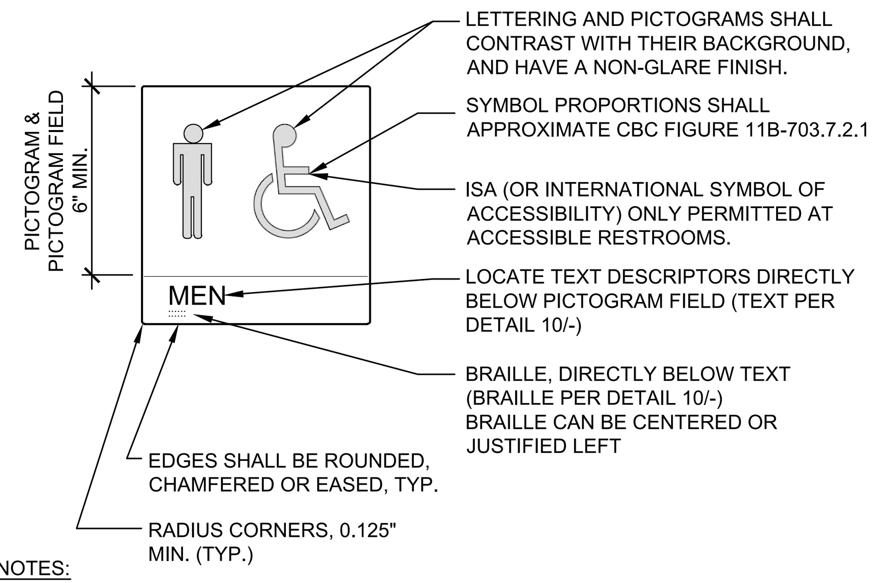

NOTES:
1. ATTACH SIGNS USING ADHESIVE AND (2) TWO FLATHEAD COUNTERSUNK SCREWS, COMPATIBLE WITH WALL MATERIAL.
2. LOCATE PER DETAIL 4/-
3. SIGNS ARE NOT IN MODULAR MFR. SCOPE OF WORK.
4. ISA COLOR AND PROPORTIONS SHALL MATCH CBC FIGURE 11B-703.7.2.1

WALL MOUNTED RESTROOM SYMBOLS-MEN 1
NOT TO SCALE

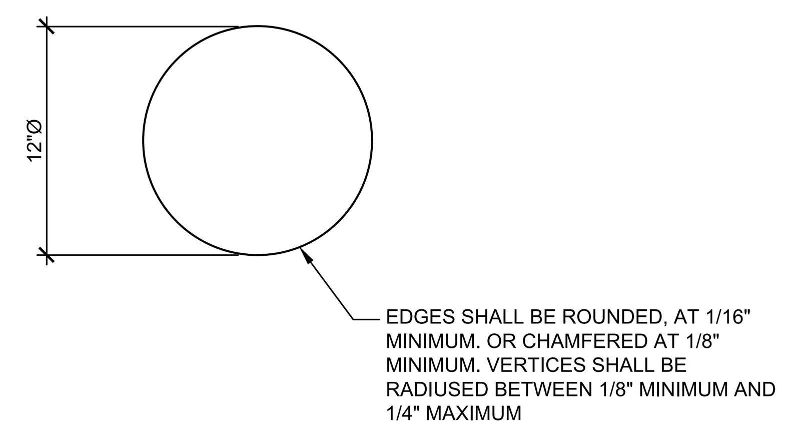

NOTES:
1. ATTACH SIGNS USING ADHESIVE AND (2) TWO FLATHEAD COUNTERSUNK SCREWS, COMPATIBLE WITH DOOR MATERIAL.
2. LOCATE PER DETAIL 4/-.
3. SIGNS ARE NOT IN MODULAR MFR. SCOPE OF WORK.
4. GEOMETRIC SYMBOLS SHALL COMPLY WITH 11B-703.7.2.6 - SEE DETAIL 18/-
5. ISA COLOR AND PROPORTIONS SHALL MATCH CBC FIGURE 11B-703.7.2.1

DOOR MOUNTED RESTROOM SYMBOLS-WOMEN 2
NOT TO SCALE

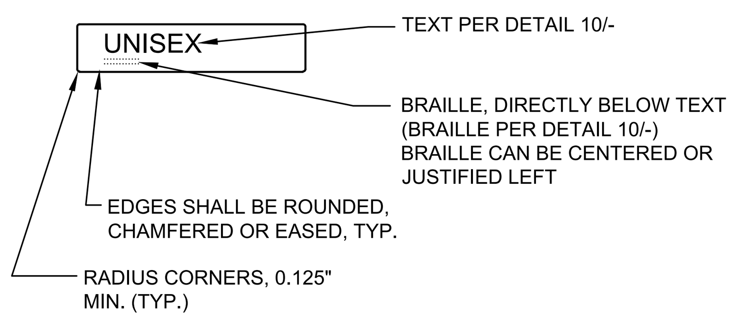

NOTES:
1. ATTACH SIGNS USING ADHESIVE AND (2) TWO FLATHEAD COUNTERSUNK SCREWS, COMPATIBLE WITH WALL MATERIAL.
2. LOCATE PER DETAIL 4/-.
3. SIGNS ARE NOT IN MODULAR MFR. SCOPE OF WORK.
4. THE UNISEX WALL-MOUNTED SIGN SHALL HAVE RAISED TEXT, CORRESPONDING BRAILLE, AND NO PICTOGRAM (DSA BU 17-01)
5. ISA COLOR AND PROPORTIONS SHALL MATCH CBC FIGURE 11B-703.7.2.1

WALL MOUNTED RESTROOM SYMBOLS-UNISEX 3
NOT TO SCALE

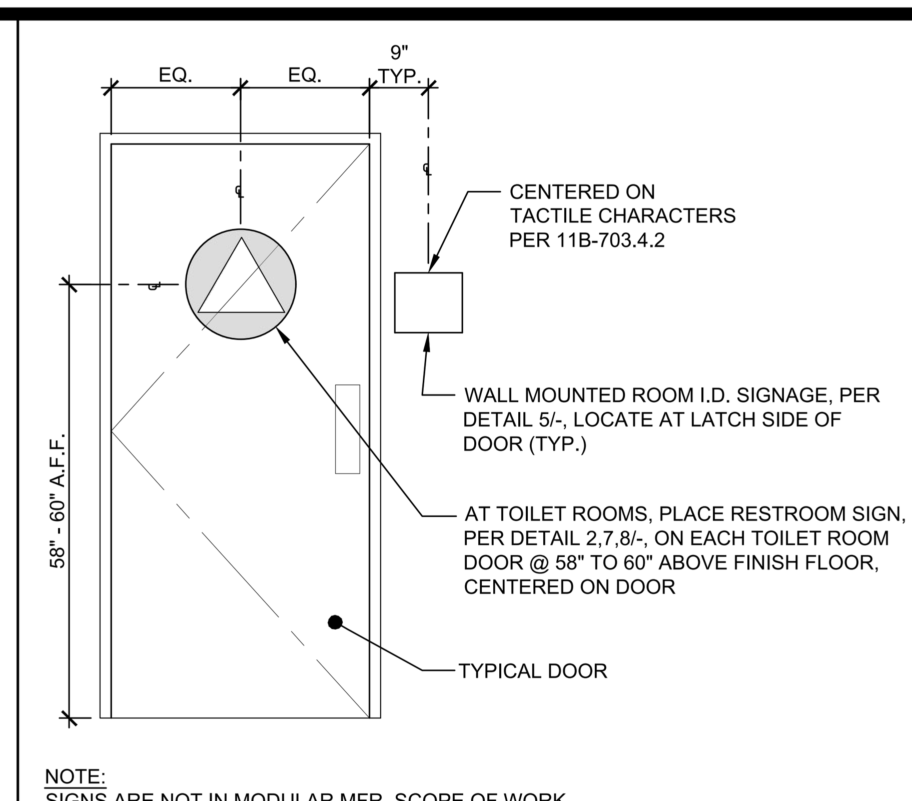

NOTE:
SIGNS ARE NOT IN MODULAR MFR. SCOPE OF WORK.

ROOM IDENTIFICATION SIGNAGE 4
NOT TO SCALE

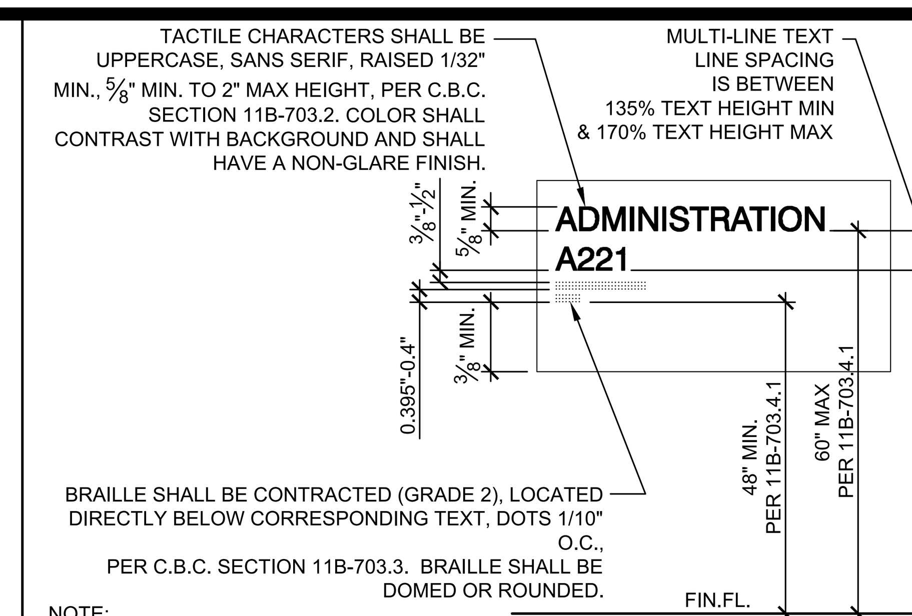

NOTE:
1. PER 11B-216 2022, NEW OR ALTERED SIGNAGE SHALL COMPLY WITH C.B.C. SECTION 11B-703.
2. FOR REQUIRED TACTILE & NON-TACTILE SIGNS LOCATIONS, SEE SHEET N2.0, ACCESSIBILITY STANDARDS, "SECTION 11B-216".
3. SIGNS ARE NOT IN MODULAR MFR. SCOPE OF WORK.
4. ATTACH SIGNS USING ADHESIVE OR MIN (2) TWO FLATHEAD COUNTERSUNK SCREWS, COMPATIBLE WITH WALL MATERIAL.
5. SIGN TO BE PLACED PER DETAIL 4/-

PERMANENT ROOM I.D. SIGNAGE 5
NOT TO SCALE

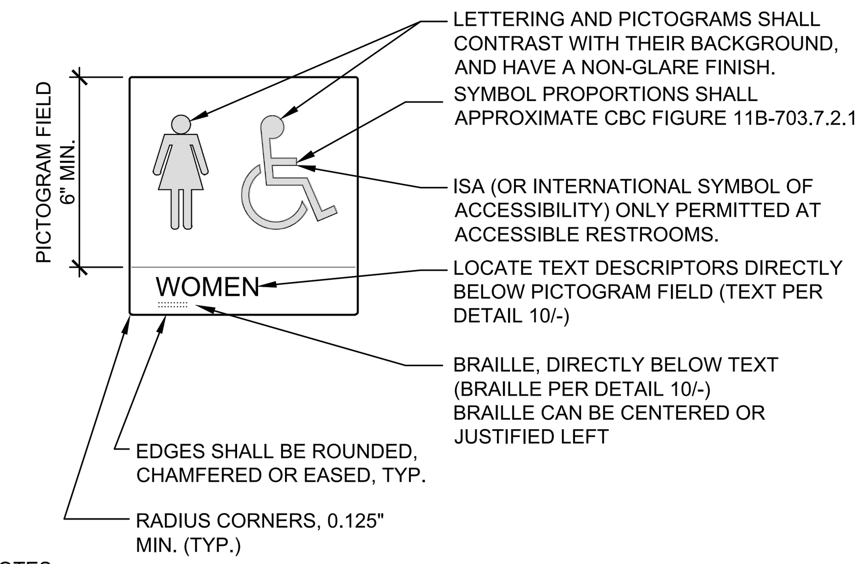

NOTES:
1. ATTACH SIGNS USING ADHESIVE AND (2) TW0 FLATHEAD COUNTERSUNK SCREWS, COMPATIBLE WITH WALL MATERIAL.
2. LOCATE PER DETAIL 4/-
3. SIGNS ARE NOT IN MODULAR MFR. SCOPE OF WORK.
4. ISA COLOR AND PROPORTIONS SHALL MATCH CBC FIGURE 11B-703.7.2.1

WALL MOUNTED RESTROOM SYMBOLS-WOMEN 6
NOT TO SCALE

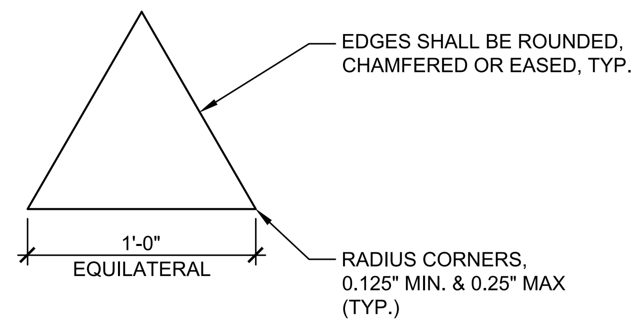

NOTES:
1. ATTACH SIGNS USING ADHESIVE AND (2) TW0 FLATHEAD COUNTERSUNK SCREWS, COMPATIBLE WITH DOOR MATERIAL.
2. LOCATE PER DETAIL 4/-
3. SIGNS ARE NOT IN MODULAR MFR. SCOPE OF WORK.
4. GEOMETRIC SYMBOLS SHALL COMPLY WITH 11B-703.7.2.6 - SEE DETAIL 18/-
5. ISA COLOR AND PROPORTIONS SHALL MATCH CBC FIGURE 11B-703.7.2.1

DOOR MOUNTED RESTROOM SYMBOL-MEN 7
NOT TO SCALE

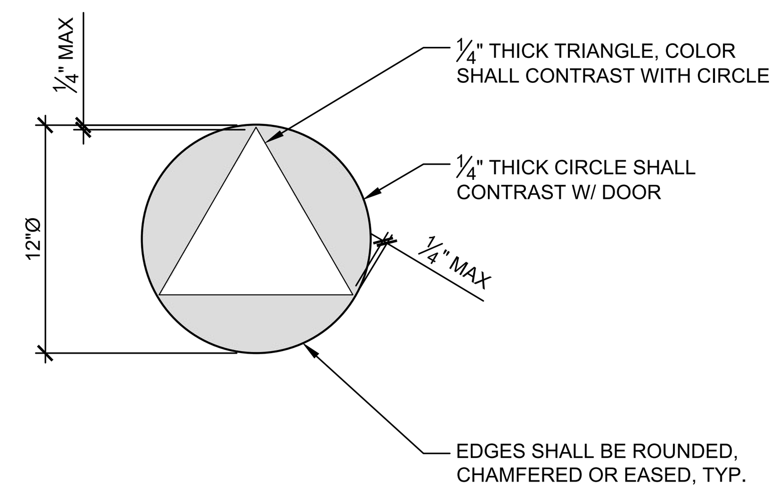

NOTES:
1. ATTACH SIGNS USING ADHESIVE AND (2) TWO FLATHEAD COUNTERSUNK SCREWS, COMPATIBLE WITH DOOR MATERIAL.
2. LOCATE PER DETAIL 4/-
3. SIGNS ARE NOT IN MODULAR MFR. SCOPE OF WORK.
4. GEOMETRIC SYMBOLS SHALL COMPLY WITH 11B-703.7.2.6 - SEE DETAIL 18/-
5. UNISEX DOOR SYMBOL SHALL BE PROVIDED WITHOUT TEXT, BRAILLE OR THE USE OF A PICTOGRAM PER DSA BU 17-01
6. ISA COLOR AND PROPORTIONS SHALL MATCH CBC FIGURE 11B-703.7.2.1

DOOR MOUNTED RESTROOM SYMBOLS-UNISEX 8
NOT TO SCALE

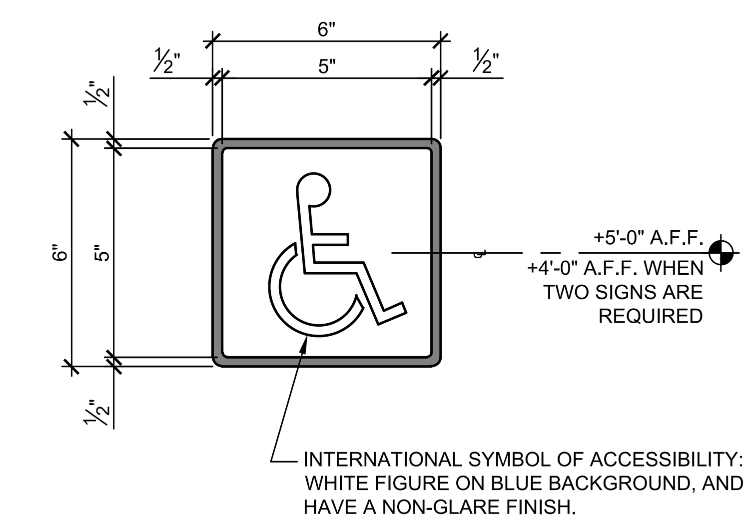

NOTES:
1. PROVIDE MECHANICAL MOUNTING w/VANDAL RESISTANT FASTENERS. PROVIDE ADHESIVE MOUNTING SYSTEM WHEN ATTACHED TO GLAZING.
2. SYMBOL PER C.B.C. SECTION 11B-703.7.2.1
3. SIGNS ARE NOT IN MODULAR MFR. SCOPE OF WORK.

INT'L SYMBOL OF ACCESSIBILITY 9
NOT TO SCALE

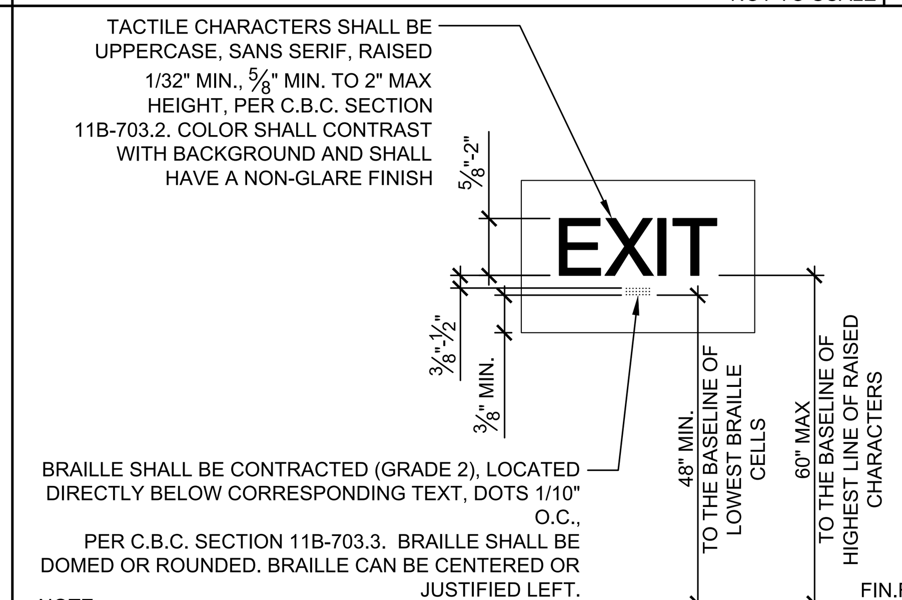

NOTE:
1. PER 11B-216, NEW OR ALTERED SIGNAGE SHALL COMPLY WITH C.B.C. SECTION 11B-703.
2. FOR REQUIRED TACTILE AND NON-TACTILE SIGNS LOCATIONS, SEE SHEET N2.0, ACCESSIBILITY STANDARDS, "SECTION 11B-216".
3. SIGNS ARE NOT IN MODULAR MFR. SCOPE OF WORK.
4. ATTACH SIGNS USING ADHESIVE OR MIN (2) TWO FLATHEAD COUNTERSUNK SCREWS, COMPATIBLE WITH WALL MATERIAL.
5. SIGN TO BE PLACED PER DETAIL 4/-

TACTILE SIGNAGE REQUIREMENTS 10
NOT TO SCALE

A. TYPESTYLE: 1" HIGH BLOCK 1/16" THICK ENGRAVED PLASTIC.

B. MOUNTING: (4) #8x1" SCREWS OR SELF-ADHESIVE. HEIGHT AS SHOWN.

C. CAPACITY POSTING PER C.B.C. SECTION 1004.3 TITLE 19 C.C.R., SECTION 3.30: "THIS ROOM SHALL BE POSTED WITH A DURABLE SIGN NEAR THE MAIN EXIT FROM THE ROOM".

D. THE SIGN SHALL BE WORDED AS FOLLOWS, WITH THE APPROPRIATE CAPACITY NUMBER LISTED:

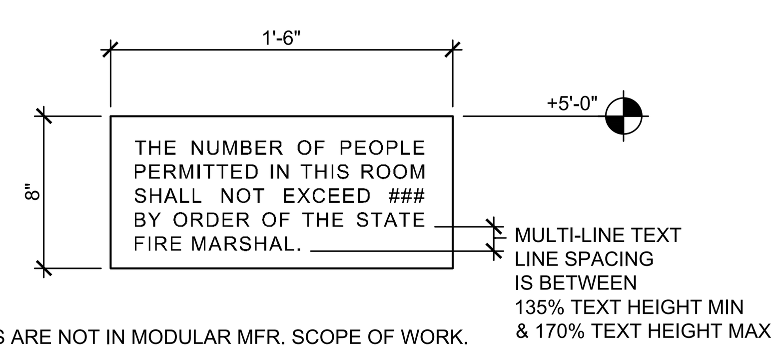

NOTES:
1. SIGNS ARE NOT IN MODULAR MFR. SCOPE OF WORK.
2. 11B-216.3 SIGNS THAT PROVIDE INFORMATION ABOUT INTERIOR SPACES SHALL COMPLY WITH SECTION 11B-703.5

OCCUPANT LOAD SIGN 11
NOT TO SCALE

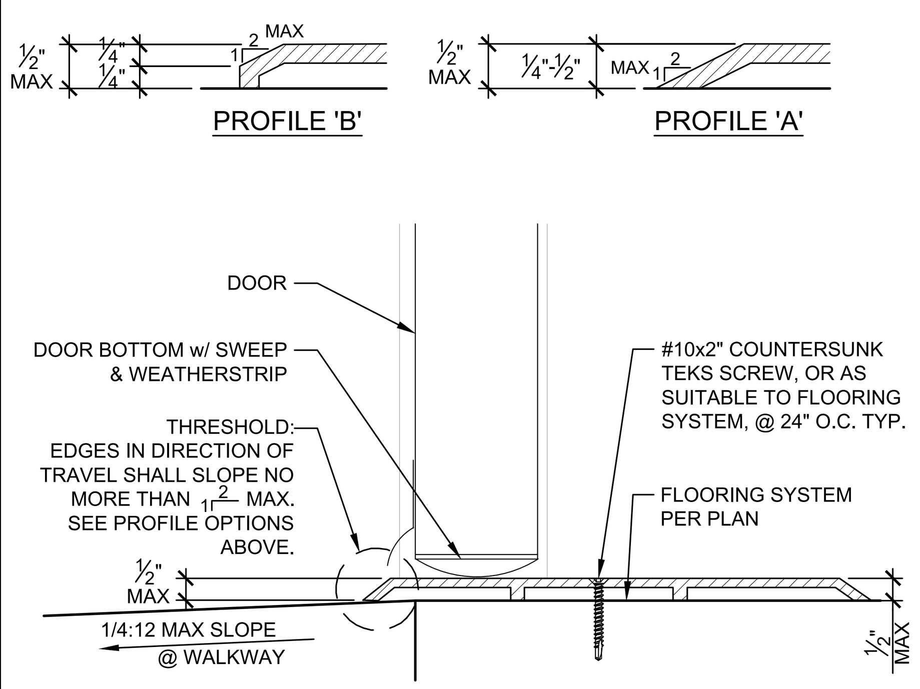

THRESHOLD @ EXTERIOR DOOR 12
NOT TO SCALE

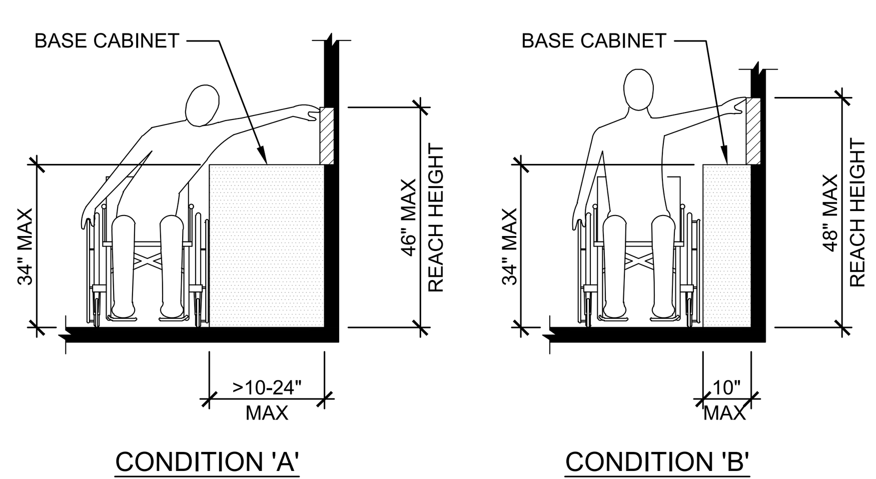

SIDE REACH AT BASE CABINET 13
NOT TO SCALE

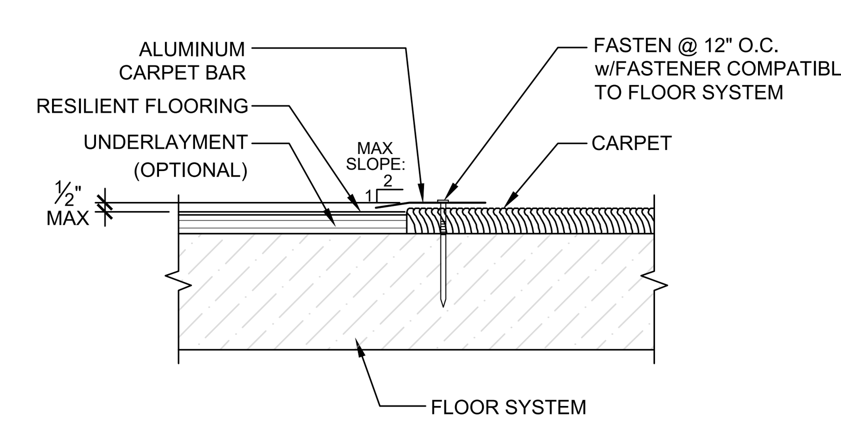

FLOORING TRANSITION DETAIL 14
NOT TO SCALE

ACCESSIBLE MEANS OF EGRESS SHALL BE PROVIDED AT THE FOLLOWING:
(PER CBC 1009.10)

- AT EXIT WAYS (PER C.B.C. 1013.4)
  1. AT EACH GRADE LEVEL EXTERIOR EXIT DOOR
  2. AT AN EXIT BY MEANS OF A RAMP ("EXIT RAMP DOWN")
  3. AT AN EXIT ROUTE VIA ENCLOSURE, PASSAGEWAY, CORRIDOR, HALLWAY, ETC.

SIGNAGE PER C.B.C. SECTION 11B-216. (ALSO REFER TO SECTIONS 11B-703, 1009.9, 1009.10, 1023.9)

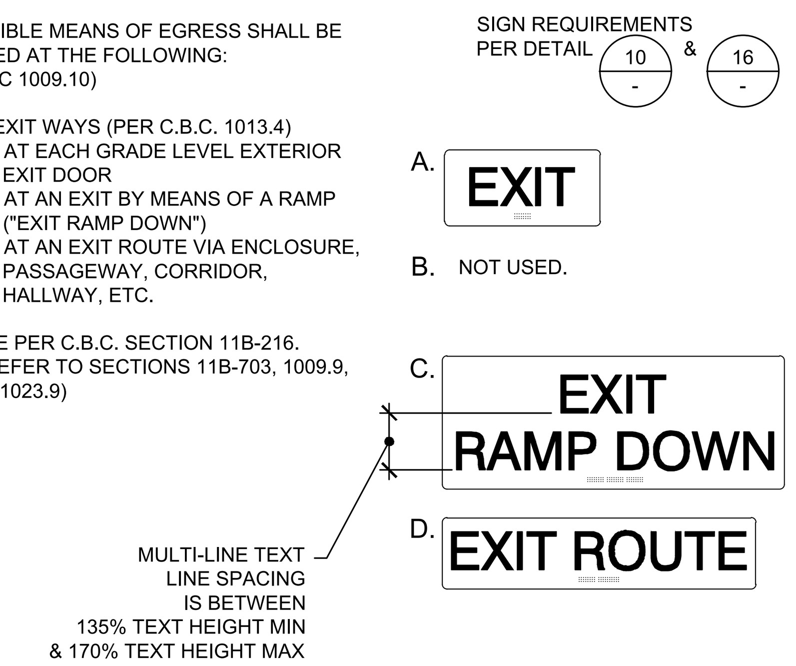

NOTE:
1. SIGNS ARE NOT IN MODULAR MFR. SCOPE OF WORK.

EGRESS SIGNAGE 15
NOT TO SCALE

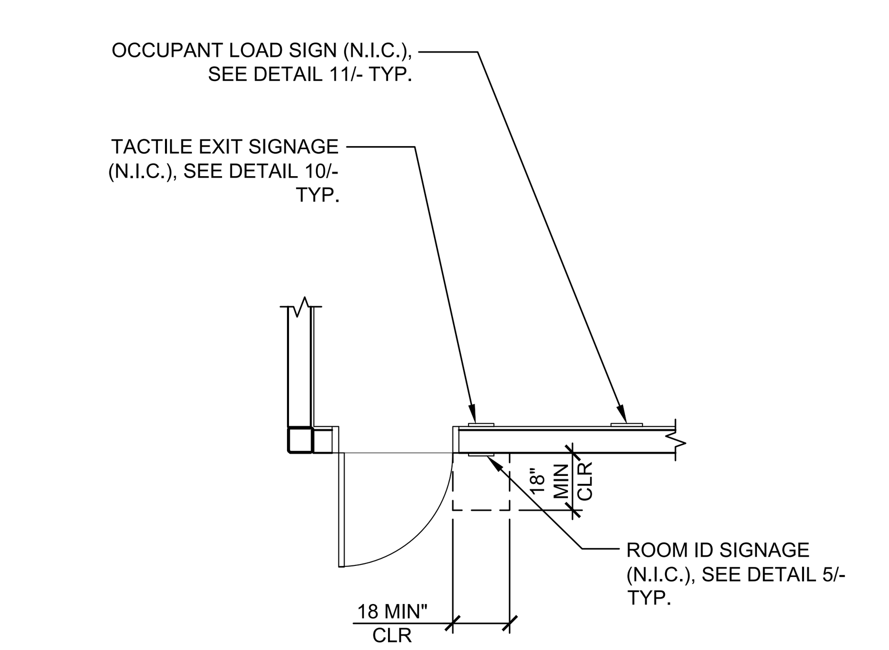

NOTE:

18" MIN CLEAR FLOOR SPACE SHALL BE CENTERED ON THE TACTILE CHARACTERS OF THE SIGN PER 11B-703.4.4.2

TYPICAL CLASSROOM SIGNAGE LOCATION 16
NOT TO SCALE

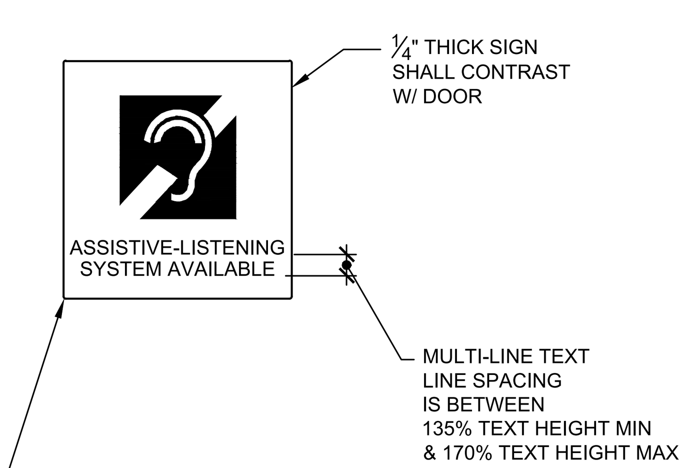

NOTES:
1. ATTACH SIGNS USING ADHESIVE AND (2) TW0 FLATHEAD COUNTERSUNK SCREWS, COMPATIBLE WITH WALL MATERIAL.
2. LOCATE AT OR NEAR THE ENTRANCE IN A PROMINENT PLACE. (11B-216.10)
3. SIGNS ARE NOT IN MODULAR MFR. SCOPE OF WORK.
4. SYMBOL PER CBC SECTION 11B-703.7.2.4
5. THE SIGN SHALL COMPLY WITH 11B-703.5 AND TABLE 11B-703.5.5.
6. ISA COLOR AND PROPORTIONS SHALL MATCH CBC FIGURE 11B-703.7.2.1

ASSISTIVE LISTENING SIGN 17
NOT TO SCALE

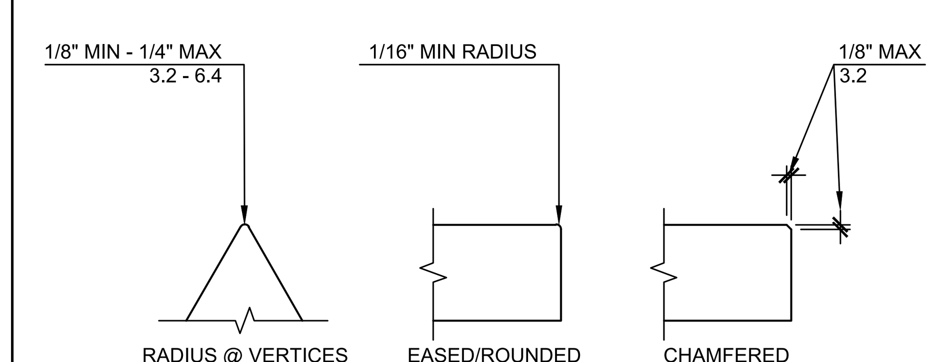

NOTES:
1. FIGURE PER 11B-703.7.2.6.4

EDGES AND VERTICES ON GEOMETRIC SYMBOLS 18
NOT TO SCALE

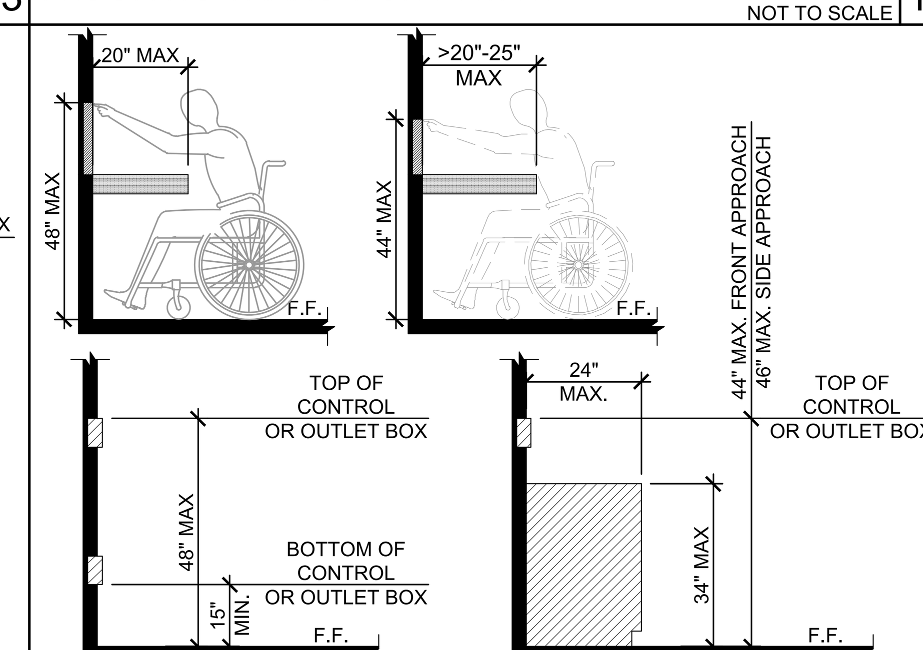

NOTES:
1. COMPLY WITH CBC 11B-308.2.2 AND 11B-308.3.2
2. FORWARD OR FRONT APPROACH FOR DEVICES MOUNTED ABOVE A COUNTER ASSUMES THAT DIRECTLY BELOW THE DEVICE, THE COUNTER HAS A 30" MINIMUM WIDTH x 27" MINIMUM HEIGHT x A CLEAR DEPTH EQUAL TO THE DEPTH OF THE COUNTER NOT TO EXCEED 24".

DEVICE MOUNTING OVER OBSTRUCTIONS DETAIL 19
NOT TO SCALE

NOT USED 20

IDENTIFICATION STAMP
DIV. OF THE STATE ARCHITECT
APP: 02-122533 INC:
REVIEWED FOR
SS ☑ FLS ☑ ACS ☑
DATE: 05/22/2024

American Modular Systems
787 Spreckels Ave., Manteca, CA 95336
Phone (209) 825-1921 Fax (209) 825-7018
www.americanmodular.com

INTELLECTUAL-PROPERTY & PROPRIETARY RIGHTS STATEMENT
COPYRIGHT © AMERICAN MODULAR SYSTEMS (AMS)
AMS OWNS ALL COPYRIGHT AND OTHER INTELLECTUAL-PROPERTY AND PROPRIETARY RIGHTS IN THESE DRAWINGS, SPECIFICATIONS, AND THE MATERIAL CONTAINED HEREIN. CERTAIN ELEMENTS SHOWN IN THESE DOCUMENTS ARE REGISTERED TRADEMARKS OF AMS. ALL PATENTABLE MATERIALS CONTAINED IN THESE DOCUMENTS AND ORIGINATING WITH AMS WILL REMAIN THE SOLE PROPERTY OF AMS. THESE DRAWING, SPECIFICATIONS, AND THE MATERIAL CONTAINED HEREIN MAY NOT BE REPRODUCED, TRANSMITTED, COPIED, DISTRIBUTED, MODIFIED, OR OTHERWISE DISPOSED OF (DIRECTLY OR INDIRECTLY) AND MAY NOT BE USED (IN WHOLE OR IN PART) TO ASSIST IN THE CONSTRUCTION, DESIGN, OR OTHER MAKING OF, OR FOR THE PURPOSE OF FURNISHING ANY INFORMATION FOR THE CONSTRUCTION, DESIGN, OR OTHER MAKING OF, ANY BUILDINGS (MODULAR OR OTHERWISE), DRAWINGS, SPECIFICATIONS, PRINTS, APPARATUS, OR PARTS THEREOF, EXCEPT AS EXPRESSLY PERMITTED BY WRITTEN CONSENT OF, OR IN A WRITTEN AGREEMENT WITH, AMS. SUBMITTAL OR DISTRIBUTION TO MEET OFFICIAL REGULATORY REQUIREMENTS WILL NOT BE CONSTRUED AS PUBLICATION IN DEROGATION OF AMS'S COPYRIGHT OR OTHER INTELLECTUAL-PROPERTY OR PROPRIETARY RIGHTS.

PRE-CHECKED SET NAME
30' x 32' THRU 60' x 32'
2GO®

SITE SPECIFIC PROJECT NAME
.
.
.

APPROVED
DIV. OF THE STATE ARCHITECT
APP: 04-122041 PC
REVIEWED FOR
SS ☑ FLS ☑ ACS ☑ CG ☑
DATE: 04/05/2024

☐ 2022 CBC PRE-CHECK (PC) DOCUMENT
A SEPARATE PROJECT APPLICATION FOR CONSTRUCTION IS REQUIRED.

MANUFACTURER PROFESSIONAL OF RECORD ON PC

THESE DRAWINGS ARE PRELIMINARY AND NOT FOR CONSTRUCTION UNLESS STAMPED & SIGNED BY THE DESIGN PROFESSIONAL OF RECORD.

REVISIONS

1	
2	
3	
4	

DRAWN BY:	A.A.
SCALE:	AS NOTED
DATE:	DD/MM/YY
PROJECT NO:	XXXX-XX

SHEET TITLE:

ACCESSIBILITY STANDARDS AND DETAILS

SHEET NUMBER:

N4.0

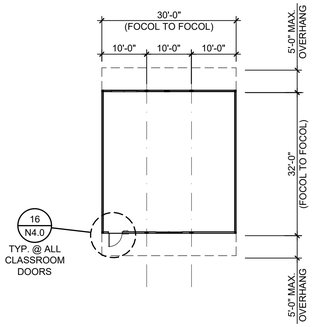

BUILDING DATA						
BUILDING OCCUPANCY	BUILDING SIZE	OVERALL SIZE[1]	SQUARE FOOTAGE PER FLOOR*	SQ.FT. ALLOWED PER FLOOR	MAXIMUM OCCUPANT LOAD (150 FOR B, 20 FOR E)	EGRESS INCHES REQUIRED (0.2 PER OCCUPANT)
E	30' x 32'	30' - 0¼"	960	9500	48	9.6**
B	30' x 32'	30' - 0¼"	960	9000	6	1.2**

**MINIMUM EGRESS WIDTH SHALL BE 34" , OR DIMENSION GIVEN IN BUILDING DATA, WHICHEVER IS GREATER. ***THIS APPLIES TO E OCCUPANCY.

30' x 32' BUILDING FLOOR PLAN SCALE : 1/16"=1'-0" 1

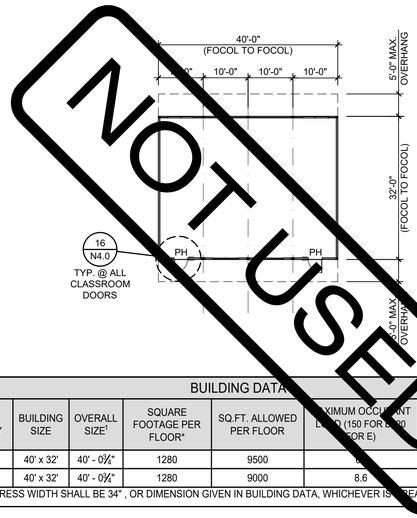

BUILDING DATA						
BUILDING OCCUPANCY	BUILDING SIZE	OVERALL SIZE[1]	SQUARE FOOTAGE PER FLOOR*	SQ.FT. ALLOWED PER FLOOR	MAXIMUM OCCUPANT LOAD (150 FOR B, 20 FOR E)	EGRESS INCHES REQUIRED (0.2 PER OCCUPANT)
E	40' x 32'	40' - 0¼"	1280	9500	[illegible]	[illegible]
B	40' x 32'	40' - 0¼"	1280	9000	8.6	1.7*

**MINIMUM EGRESS WIDTH SHALL BE 34" , OR DIMENSION GIVEN IN BUILDING DATA, WHICHEVER IS GREATER.

PH = PANIC HARDWARE

40' x 32' BUILDING FLOOR PLAN SCALE : 1/16"=1'-0" 2

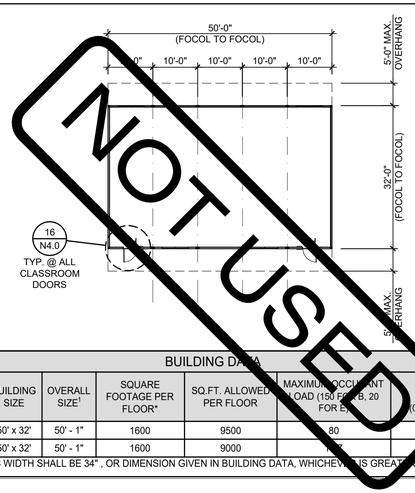

BUILDING DATA						
BUILDING OCCUPANCY	BUILDING SIZE	OVERALL SIZE[1]	SQUARE FOOTAGE PER FLOOR*	SQ.FT. ALLOWED PER FLOOR	MAXIMUM OCCUPANT LOAD (150 FOR B, 20 FOR E)	EGRESS INCHES REQUIRED (0.2 PER OCCUPANT)
E	50' x 32'	50' - 1"	1600	9500	80	[illegible]16**
B	50' x 32'	50' - 1"	1600	9000	[illegible]	2.1**

**MINIMUM EGRESS WIDTH SHALL BE 34" , OR DIMENSION GIVEN IN BUILDING DATA, WHICHEVER IS GREATER.

PH = PANIC HARDWARE

50' x 32' BUILDING FLOOR PLAN SCALE : 1/16"=1'-0" 3

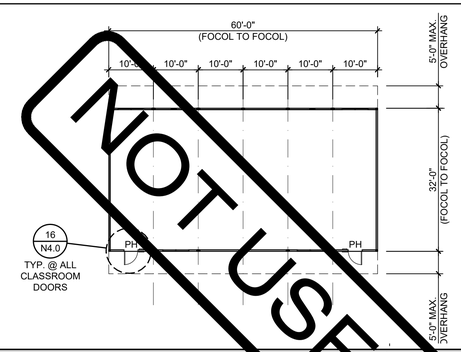

BUILDING DATA						
BUILDING OCCUPANCY	BUILDING SIZE	OVERALL SIZE[1]	SQUARE FOOTAGE PER FLOOR*	SQ.FT. ALLOWED PER FLOOR	MAXIMUM OCCUPANT LOAD (150 FOR B, 20 FOR E)	EGRESS INCHES REQUIRED (0.2 PER OCCUPANT)
E	60' x 32'	60' - 1¼"	1920	9500	96	19.2**
B	60' x 32'	60' - 1¼"	1920	9000	[illegible]	2.6**

**MINIMUM EGRESS WIDTH SHALL BE 34" , OR DIMENSION GIVEN IN BUILDING DATA, WHICHEVER IS GREATER.

PH = PANIC HARDWARE

60' x 32' BUILDING FLOOR PLAN SCALE : 1/16"=1'-0" 4

1. PANIC HARDWARE IS REQUIRED TO BE INSTALLED WHEN THE CONFIGURATION OF ANY ROOM PROVIDES AN OCCUPANT LOAD OF 50 OR GREATER, PER CBC 1010.2.9.
2. THE BUILDING SIZES AND SQUARE FOOTAGES REFLECTED ON THIS SHEET ARE SUBJECT TO SQUARE FOOTAGE INCREASE AS PERMITTED BY SITE CONDITIONS, PER CBC 506.2, AND BY AUTOMATIC SPRINKLER SYSTEM, PER CBC 506.3.
3. RESTROOM CONFIGURATIONS OCCUR AT OUTER WINGS OF BUILDINGS.
4. SEE FOUNDATION DRAWINGS FOR TRUE DIMENSIONS AT FLOOR PLACEMENT AND OVERALL FOUNDATION SIZE.
5. FOR ROOM ID SIGNAGE (N.I.C.) SEE DETAILS ON SHEET N4.0. TYPICAL FOR ALL BUILDING CONFIGURATIONS.
6. MINIMUM EGRESS WIDTH REQUIRED SHALL BE 34" PER CLASSROOM OR DIMENSION SPECIFIED IN BUILDING DATA, WHICHEVER IS GREATER.
7. BUILDING DATA REPORTED ON THIS SHEET IS INTENDED FOR OCCUPANT LOAD AND EGRESS. TOTAL BUILDING SQUARE FOOTAGE WHICH INCLUDES AREA FROM SITE SPECIFIC OVERHANGS OR PROJECTIONS IN NOT INCLUDED.
8. THE CONFIGURATIONS SHOWN ARE NOT OVERALL BUILDING FOOTPRINTS. INTERIOR WALLS/PARTITIONS (IF APPLICABLE) ARE NOT SHOWN FOR CLARITY.
9. EXIT AND EXIT ACCESS DOORS FROM ROOMS HAVING AN OCCUPANT LOAD OF 50 OR MORE SHALL NOT BE PROVIDED WITH A LATCH OR LOCK UNLESS IT IS A PANIC OR FIRE EXIT HARDWARE PER CBC 1010.2.9

SITE NOTE:

3/16:12 (1%) MINIMUM TO ¼:12 (2%) MAXIMUM GRADE FROM FACE OF BUILDING MUST BE ADHERED TO FOR WATER RUN-OFF. PONDING MAY OCCUR AROUND THE PERIMETER OF THE BUILDING.

NOT USED 5

NOT USED 6

GENERAL NOTES

IDENTIFICATION STAMP
DIV. OF THE STATE ARCHITECT
APP: 02-122533 INC:
REVIEWED FOR
SS ☑ FLS ☑ ACS ☑
DATE: 05/22/2024

American Modular Systems
787 Spreckels Ave., Manteca, CA 95336
Phone (209) 825-1921 Fax (209) 825-7018
www.americanmodular.com

INTELLECTUAL-PROPERTY & PROPRIETARY RIGHTS STATEMENT
COPYRIGHT © AMERICAN MODULAR SYSTEMS (AMS)
AMS OWNS ALL COPYRIGHT AND OTHER INTELLECTUAL-PROPERTY AND PROPRIETARY RIGHTS IN THESE DRAWINGS, SPECIFICATIONS, AND THE MATERIAL CONTAINED HEREIN. CERTAIN ELEMENTS SHOWN IN THESE DOCUMENTS ARE REGISTERED TRADEMARKS OF AMS. ALL PATENTABLE MATERIALS CONTAINED IN THESE DOCUMENTS AND ORIGINATING WITH AMS WILL REMAIN THE SOLE PROPERTY OF AMS. THESE DRAWING, SPECIFICATIONS AND THE MATERIAL CONTAINED HEREIN MAY NOT BE REPRODUCED, TRANSMITTED, COPIED, DISTRIBUTED, MODIFIED, OR OTHERWISE DISPOSED OF (DIRECTLY OR INDIRECTLY) AND MAY NOT BE USED (IN WHOLE OR IN PART) TO ASSIST IN THE CONSTRUCTION, DESIGN, OR OTHER MAKING OF, OR FOR THE PURPOSE OF FURNISHING ANY INFORMATION FOR THE CONSTRUCTION, DESIGN, OR OTHER MAKING OF, ANY BUILDINGS (MODULAR OR OTHERWISE), DRAWINGS, SPECIFICATIONS, PRINTS, APPARATUS, OR PARTS THEREOF, EXCEPT AS EXPRESSLY PERMITTED BY WRITTEN CONSENT OF, OR IN A WRITTEN AGREEMENT WITH, AMS. SUBMITTAL OR DISTRIBUTION TO MEET OFFICIAL REGULATORY REQUIREMENTS WILL NOT BE CONSTRUED AS PUBLICATION IN DEROGATION OF AMS'S COPYRIGHT OR OTHER INTELLECTUAL-PROPERTY OR PROPRIETARY RIGHTS.

PRE-CHECKED SET NAME

30' x 32' THRU 60' x 32'

2GO®

SITE SPECIFIC PROJECT NAME

.
.
.

APPROVED
DIV. OF THE STATE ARCHITECT
APP: 04-122041 PC
REVIEWED FOR
SS ☑ FLS ☑ ACS ☑ CG ☑
DATE: 04/05/2024

☐ 2022 CBC PRE-CHECK (PC) DOCUMENT
A SEPARATE PROJECT APPLICATION FOR CONSTRUCTION IS REQUIRED

MANUFACTURER PROFESSIONAL OF RECORD ON PC

LICENSED ARCHITECT
ANDREW PATRICK CLAYTON
No. C12631
Ren. 3-31-25
STATE OF CALIFORNIA

THESE DRAWINGS ARE PRELIMINARY AND NOT FOR CONSTRUCTION UNLESS STAMPED & SIGNED BY THE DESIGN PROFESSIONAL OF RECORD.

REVISIONS

1
2
3
4

DRAWN BY:	A.A.
SCALE:	AS NOTED
DATE:	DD/MM/YY
PROJECT NO:	XXXX-XX

SHEET TITLE:

MULTIPLE FLOOR PLAN CONFIGURATIONS

SHEET NUMBER:

N5.0

PC 30x32

CZ Group	Climate Zone	Reference City	Roof Rigid R-value[1]	Ground Floor R-value[2]	Wood Framed Wall R-value[3]	Window U-factor[4]	Window SHGC[4]	Air Barrier (Y/N)	Cool Roof (Y/N)	CO Sensor (Y/N)	FC-1 Unit Type[5]	Number of FC-1 Units[6]	OSA per FC-1 (cfm)[7]	FC-2 Unit Type[5]	Number of FC-2 Units[6]	OSA per FC-2 (cfm)[7]	Design PV (kW DC)
A	CZ01	Arcata	R-15 ci	R-19 Batt	R-13 Batt	0.42	0.25	Y	N	N	W42HC	1	364.8	na	0	na	0.0
	CZ16	**Blue Canyon**															
B	CZ02	Santa Rosa	R-5 ci	R-19 Batt	R-13 Batt	0.42	0.25	Y	N	N	W42HC	1	364.8	na	0	na	0.0
	CZ03	Oakland															
	CZ04	San Jose-Reid															
	CZ05	**Santa Maria**															
C	CZ06	Torrance	R-5 ci	R-19 Batt	R-13 Batt	0.42	0.25	Y	N	N	W42HC	1	364.8	na	0	na	0.0
	CZ07	San Diego-Lindbergh															
	CZ08	Fullerton															
	CZ09	Burbank-Glendale															
	CZ10	Riverside															
	CZ11	Red Bluff															
	CZ12	Sacramento															
	CZ13	**Fresno**															
D	CZ14	Palmdale	R-5 ci	R-19 Batt	R-13 Batt	0.42	0.25	Y	N	N	W42HC	1	364.8	na	0	na	0.0
	CZ15	**Palm Spring-Intl**															0.0

PC 40x32

CZ Group	Climate Zone	Reference City	Roof Rigid R-value[1]	Ground Floor R-value[2]	Wood Framed Wall R-value[3]	Window U-factor[4]	Window SHGC[4]	Air Barrier (Y/N)	Cool Roof (Y/N)	CO Sensor (Y/N)	FC-1 Unit Type[5]	Number of FC-1 Units[6]	OSA per FC-1 (cfm)[7]	FC-2 Unit Type[5]	Number of FC-2 Units[6]	OSA per FC-2 (cfm)[7]	Design PV (kW DC)
A	CZ01	Arcata	R-15 ci	R-19 Batt	R-13 Batt	0.42	0.25	Y	N	N	W42HC	1	486.4	na	0	na	0.0
	CZ16	**Blue Canyon**															
B	CZ02	Santa Rosa	R-5 ci	R-19 Batt	R-13 Batt	0.42	0.25	Y	N	N	W42HC	1	486.4	na	0	na	0.0
	CZ03	Oakland															
	CZ04	San Jose-Reid															
	CZ05	**Santa Maria**															
C	CZ06	Torrance	R-5 ci	R-19 Batt	R-13 Batt	0.42	0.25	Y	N	Y	SysAir 4T	1	486.4	na	0	na	0.0
	CZ07	San Diego-Lindbergh															
	CZ08	Fullerton															
	CZ09	Burbank-Glendale															
	CZ10	Riverside															
	CZ11	Red Bluff															
	CZ12	Sacramento															
	CZ13	**Fresno**															
D	CZ14	Palmdale	R-5 ci	R-19 Batt	R-13 Batt	0.42	0.25	Y	N	Y	SysAir 4T	1	486.4	na	0	na	0.0
	CZ15	**Palm Spring-Intl**															0.0

PC 50x32

CZ Group	Climate Zone	Reference City	Roof Rigid R-value[1]	Ground Floor R-value[2]	Wood Framed Wall R-value[3]	Window U-factor[4]	Window SHGC[4]	Air Barrier (Y/N)	Cool Roof (Y/N)	CO Sensor (Y/N)	FC-1 Unit Type[5]	Number of FC-1 Units[6]	OSA per FC-1 (cfm)[7]	FC-2 Unit Type[5]	Number of FC-2 Units[6]	OSA per FC-2 (cfm)[7]	Design PV (kW DC)
A	CZ01	Arcata	R-15 ci	R-19 Batt	R-13 Batt	0.42	0.25	Y	N	N	W42HC	2	304.0	na	0	na	0.0
	CZ16	**Blue Canyon**															
B	CZ02	Santa Rosa	R-5 ci	R-19 Batt	R-13 Batt	0.42	0.25	Y	N	N	W42HC	2	304.0	na	0	na	0.0
	CZ03	Oakland															
	CZ04	San Jose-Reid															
	CZ05	**Santa Maria**															
C	CZ06	Torrance	R-5 ci	R-19 Batt	R-13 Batt	0.42	0.25	Y	N	N	W42HC	2	304.0	na	0	na	0.0
	CZ07	San Diego-Lindbergh															
	CZ08	Fullerton															
	CZ09	Burbank-Glendale															
	CZ10	Riverside															
	CZ11	Red Bluff															
	CZ12	Sacramento															
	CZ13	**Fresno**															
D	CZ14	Palmdale	R-5 ci	R-19 Batt	R-13 Batt	0.42	0.25	Y	N	N	W42HC	2	304.0	na	0	na	0.0
	CZ15	**Palm Spring-Intl**															0.0

PC 60x32

CZ Group	Climate Zone	Reference City	Roof Rigid R-value[1]	Ground Floor R-value[2]	Wood Framed Wall R-value[3]	Window U-factor[4]	Window SHGC[4]	Air Barrier (Y/N)	Cool Roof (Y/N)	CO Sensor (Y/N)	FC-1 Unit Type[5]	Number of FC-1 Units[6]	OSA per FC-1 (cfm)[7]	FC-2 Unit Type[5]	Number of FC-2 Units[6]	OSA per FC-2 (cfm)[7]	Design PV (kW DC)
A	CZ01	Arcata	R-15 ci	R-19 Batt	R-13 Batt	0.42	0.25	Y	N	N	W42HC	2	364.8	na	0	na	0.0
	CZ16	**Blue Canyon**															
B	CZ02	Santa Rosa	R-5 ci	R-19 Batt	R-13 Batt	0.42	0.25	Y	N	N	W42HC	2	364.8	na	0	na	0.0
	CZ03	Oakland															
	CZ04	San Jose-Reid															
	CZ05	**Santa Maria**															
C	CZ06	Torrance	R-5 ci	R-19 Batt	R-13 Batt	0.42	0.25	Y	N	N	W42HC	2	364.8	na	0	na	0.0
	CZ07	San Diego-Lindbergh															
	CZ08	Fullerton															
	CZ09	Burbank-Glendale															
	CZ10	Riverside															
	CZ11	Red Bluff															
	CZ12	Sacramento															
	CZ13	**Fresno**															
D	CZ14	Palmdale	R-5 ci	R-19 Batt	R-13 Batt	0.42	0.25	Y	N	N	W42HC	2	364.8	na	0	na	1.9
	CZ15	**Palm Spring-Intl**															2.8

HVAC Specification Table

Bard W18H-W60H Series Wall-Mount	Capacity (Ton)	Cooling (Btu/h)	Heating (Btu/h)	Supply Fan CV/VFD	Supply Fan (CFM)	Supply Fan (HP)	Cooling Efficiency (EER)	Heating Efficiency (COP)
W42HC	3.5	42,000	39,000	CV	1,350	0.50	11.0	3.3
W48HC	4.0	47,500	42,500	CV	1,550	0.75	11	3.3
W60HC	4.5	54,500	52,500	CV	1,750	0.75	11.0	3.3
Systemair Sophomore								
SysAir 3T	3.0	35,600	32,400	VFD	1,100	0.50	11.1	3.41
SysAir 4T	4.0	47,500	44,800	VFD	1,600	0.50	11.0	3.54
SysAir 5T	5.0	57,100	56,200	VFD	1,800	0.75	11.0	3.39

Notes

(green)	Indicates deviation from predominant design
(blue)	Indicates Systemair Sophomore HVAC unit
1	Rigid insulation R-value added above the R-19 Roof Structure per detail
2	Rigid insulation R-value added to the exterior R-13 Metal Stud walls, per detail
3	Rigid insulation R-value below the ground floor slab
4	NFRC Tested Window U-factor and SHGC
5	HVAC Unit Specification
6	Total number of specified HVAC units in PC
7	Design Ouside Air (OSA / cfm) per HVAC unit per Section H3. or the Title 24reports

IDENTIFICATION STAMP
DIV. OF THE STATE ARCHITECT
APP: 02-122533 INC:
REVIEWED FOR
SS ☑ FLS ☑ ACS ☑
DATE: 05/22/2024

American Modular Systems
787 Spreckels Ave., Manteca, CA 95336
Phone (209) 825-1921 Fax (209) 825-7018
www.americanmodular.com

INTELLECTUAL-PROPERTY & PROPRIETARY RIGHTS STATEMENT
COPYRIGHT © AMERICAN MODULAR SYSTEMS (AMS)
AMS OWNS ALL COPYRIGHT AND OTHER INTELLECTUAL-PROPERTY AND PROPRIETARY RIGHTS IN THESE DRAWINGS, SPECIFICATIONS, AND THE MATERIAL CONTAINED HEREIN. CERTAIN ELEMENTS SHOWN IN THESE DOCUMENTS ARE REGISTERED TRADEMARKS OF AMS. ALL PATENTABLE MATERIALS CONTAINED IN THESE DOCUMENTS AND ORIGINATING WITH AMS WILL REMAIN THE SOLE PROPERTY OF AMS. THESE DRAWING, SPECIFICATIONS, AND THE MATERIAL CONTAINED HEREIN MAY NOT BE REPRODUCED, TRANSMITTED, COPIED, DISTRIBUTED, MODIFIED, OR OTHERWISE DISPOSED OF (DIRECTLY OR INDIRECTLY) AND MAY NOT BE USED (IN WHOLE OR IN PART) TO ASSIST IN THE CONSTRUCTION, DESIGN, OR OTHER MAKING OF, OR FOR THE PURPOSE OF FURNISHING ANY INFORMATION FOR THE CONSTRUCTION, DESIGN, OR OTHER MAKING OF, ANY BUILDINGS (MODULAR OR OTHERWISE), DRAWINGS, SPECIFICATIONS, PRINTS, APPARATUS, OR PARTS THEREOF, EXCEPT AS EXPRESSLY PERMITTED BY WRITTEN CONSENT OF, OR IN A WRITTEN AGREEMENT WITH, AMS. SUBMITTAL OR DISTRIBUTION TO MEET OFFICIAL REGULATORY REQUIREMENTS WILL NOT BE CONSTRUED AS PUBLICATION IN DEROGATION OF AMS'S COPYRIGHT OR OTHER INTELLECTUAL-PROPERTY OR PROPRIETARY RIGHTS.

PRE-CHECKED SET NAME

30' x 32' THRU 60' x 32'

2GO®

SITE SPECIFIC PROJECT NAME

.
.
.

APPROVED
DIV. OF THE STATE ARCHITECT
APP: 04-122041 PC
REVIEWED FOR
SS ☑ FLS ☑ ACS ☑ CG ☑
DATE: 04/05/2024

☐ **2022 CBC PRE-CHECK (PC) DOCUMENT**
A SEPARATE PROJECT APPLICATION FOR CONSTRUCTION IS REQUIRED.

MANUFACTURER PROFESSIONAL OF RECORD ON PC

LICENSED ARCHITECT
RANDAL PATRICK CAVANAGH
No. C12631
Ren. 3-31-25
STATE OF CALIFORNIA

THESE DRAWINGS ARE PRELIMINARY AND NOT FOR CONSTRUCTION UNLESS STAMPED & SIGNED BY THE DESIGN PROFESSIONAL OF RECORD.

REVISIONS

1
2
3
4

DRAWN BY:	A.A.
SCALE:	AS NOTED
DATE:	DD/MM/YY
PROJECT NO:	XXXX-XX

SHEET TITLE:

ENERGY CALCULATIONS SUMMATION SHEET

SHEET NUMBER:

EN.1A

PC DESIGN REVIEW INFORMATION

Title 24-2022, Part 6, Energy Code

Model Name and Option: PC 30x32 — Calculation Date/Time of Energy Report: 9/19/2023
Total Floor Area: 960 — DSA Application:
HVAC System Type: VSHP

CZ Group	Climate Zone / Azimuth (Front Orientation)	Metric	Standard Design	Proposed Design	Margin	Worst Case
A	Climate Zone 16 Blue Canyon					
	30°	TDV-E	311.6	267.0	44.6	
		TDV-T	311.6	267.0	44.6	
		SOURCE	42.1	25.7	16.3	
	75°	TDV-E	330.2	268.8	61.4	
		TDV-T	330.2	268.8	61.4	
		SOURCE	42.6	25.8	16.8	
	120°	TDV-E	310.5	268.6	41.9	
		TDV-T	310.5	268.6	41.9	
		SOURCE	41.5	25.8	15.7	
	165°	TDV-E	308.2	265.2	43.1	
		TDV-T	308.2	265.2	43.1	
		SOURCE	41.4	25.6	15.8	
	210°	TDV-E	320.4	266.2	54.2	
		TDV-T	320.4	266.2	54.2	
		SOURCE	42.2	25.6	16.5	
	255°	TDV-E	310.3	268.9	41.4	
		TDV-T	310.3	268.9	41.4	
		SOURCE	41.0	25.9	15.2	
	300°	TDV-E	303.3	269.4	33.9	
		TDV-T	303.3	269.4	33.9	
		SOURCE	40.7	26.0	14.7	Worst Case
	345°	TDV-E	296.5	266.4	30.0	Worst Case
		TDV-T	296.5	266.4	30.0	Worst Case
		SOURCE	41.3	25.7	15.5	
B	Climate Zone 05 Santa Maria					
	30°	TDV-E	211.4	150.8	60.6	
		TDV-T	211.4	150.8	60.6	
		SOURCE	20.3	15.3	5.0	
	75°	TDV-E	211.3	150.2	61.1	
		TDV-T	211.3	150.2	61.1	
		SOURCE	20.2	15.2	5.0	
	120°	TDV-E	234.5	150.1	84.4	
		TDV-T	234.5	150.1	84.4	
		SOURCE	22.1	15.2	6.9	
	165°	TDV-E	212.8	150.3	62.5	
		TDV-T	212.8	150.3	62.5	
		SOURCE	20.4	15.2	5.2	
	210°	TDV-E	224.0	152.7	71.4	
		TDV-T	224.0	152.7	71.4	
		SOURCE	21.3	15.3	5.9	
	255°	TDV-E	208.6	152.2	56.4	
		TDV-T	208.6	152.2	56.4	
		SOURCE	19.9	15.3	4.6	
	300°	TDV-E	228.8	150.4	78.4	
		TDV-T	228.8	150.4	78.4	
		SOURCE	21.6	15.3	6.3	
	345°	TDV-E	202.9	149.2	53.7	Worst Case
		TDV-T	202.9	149.2	53.7	Worst Case
		SOURCE	19.6	15.2	4.4	Worst Case
C	Climate Zone 13 Fresno					
	30°	TDV-E	331.2	249.9	81.2	
		TDV-T	331.2	249.9	81.2	
		SOURCE	26.6	19.0	7.6	
	75°	TDV-E	343.7	255.5	88.1	
		TDV-T	343.7	255.5	88.1	
		SOURCE	27.4	19.1	8.2	
	120°	TDV-E	338.1	254.8	83.2	
		TDV-T	338.1	254.8	83.2	
		SOURCE	27.0	19.1	7.9	
	165°	TDV-E	317.4	247.9	69.5	
		TDV-T	317.4	247.9	69.5	
		SOURCE	25.5	18.7	6.8	
	210°	TDV-E	336.6	252.2	84.5	
		TDV-T	336.6	252.2	84.5	
		SOURCE	27.1	19.0	8.1	
	255°	TDV-E	337.1	259.8	77.3	
		TDV-T	337.1	259.8	77.3	
		SOURCE	26.8	19.3	7.5	
	300°	TDV-E	331.3	257.7	73.6	
		TDV-T	331.3	257.7	73.6	
		SOURCE	26.4	19.3	7.2	
	345°	TDV-E	311.0	247.9	63.0	Worst Case
		TDV-T	311.0	247.9	63.0	Worst Case
		SOURCE	25.0	18.8	6.2	Worst Case
D	Climate Zone 15 Palm Spring-Intl					
	30°	TDV-E	364.2	282.6	81.5	
		TDV-T	364.2	282.6	81.5	
		SOURCE	26.4	17.8	8.6	
	75°	TDV-E	377.4	286.9	90.5	
		TDV-T	377.4	286.9	90.5	
		SOURCE	27.4	18.0	9.4	
	120°	TDV-E	378.1	286.5	91.7	
		TDV-T	378.1	286.5	91.7	
		SOURCE	27.2	17.9	9.4	
	165°	TDV-E	354.5	281.5	73.0	
		TDV-T	354.5	281.5	73.0	
		SOURCE	25.5	17.5	8.0	
	210°	TDV-E	374.5	285.6	88.8	
		TDV-T	374.5	285.6	88.8	
		SOURCE	27.2	18.0	9.2	
	255°	TDV-E	373.3	289.7	83.6	
		TDV-T	373.3	289.7	83.6	
		SOURCE	27.0	18.2	8.8	
	300°	TDV-E	368.9	286.8	82.0	
		TDV-T	368.9	286.8	82.0	
		SOURCE	26.6	18.0	8.6	
	345°	TDV-E	346.1	279.8	66.4	Worst Case
		TDV-T	346.1	279.8	66.4	Worst Case
		SOURCE	24.8	17.5	7.3	Worst Case

PC DESIGN REVIEW INFORMATION

Title 24-2022, Part 6, Energy Code

Model Name and Option: PC 40x32 — Calculation Date/Time of Energy Report: 9/19/2023
Total Floor Area: 1280 — DSA Application:
HVAC System Type: VSHP

CZ Group	Climate Zone / Azimuth (Front Orientation)	Metric	Standard Design	Proposed Design	Margin	Worst Case
A	Climate Zone 16 Blue Canyon					
	30°	TDV-E	305.2	252.7	52.5	
		TDV-T	305.2	252.7	52.5	
		SOURCE	39.5	23.9	15.6	
	75°	TDV-E	314.2	255.7	58.5	
		TDV-T	314.2	255.7	58.5	
		SOURCE	39.9	24.1	15.8	
	120°	TDV-E	307.0	256.4	50.6	
		TDV-T	307.0	256.4	50.6	
		SOURCE	39.6	24.3	15.4	
	165°	TDV-E	286.9	252.6	34.3	Worst Case
		TDV-T	286.9	252.6	34.3	Worst Case
		SOURCE	38.8	24.0	14.8	Worst Case
	210°	TDV-E	297.1	252.7	44.3	
		TDV-T	297.1	252.7	44.3	
		SOURCE	39.3	23.9	15.4	
	255°	TDV-E	315.4	255.2	60.2	
		TDV-T	315.4	255.2	60.2	
		SOURCE	39.9	24.1	15.8	
	300°	TDV-E	298.1	255.7	42.3	
		TDV-T	298.1	255.7	42.3	
		SOURCE	39.1	24.2	14.9	
	345°	TDV-E	293.9	252.0	41.8	
		TDV-T	293.9	252.0	41.8	
		SOURCE	38.8	23.9	14.9	
B	Climate Zone 05 Santa Maria					
	30°	TDV-E	215.0	139.4	75.6	
		TDV-T	215.0	139.4	75.6	
		SOURCE	20.3	14.0	6.3	
	75°	TDV-E	214.5	139.2	75.4	
		TDV-T	214.5	139.2	75.4	
		SOURCE	20.3	14.0	6.3	
	120°	TDV-E	202.1	137.8	64.3	
		TDV-T	202.1	137.8	64.3	
		SOURCE	19.3	14.0	5.3	
	165°	TDV-E	198.9	136.6	62.3	
		TDV-T	198.9	136.6	62.3	
		SOURCE	19.0	13.9	5.2	
	210°	TDV-E	207.6	138.2	69.5	
		TDV-T	207.6	138.2	69.5	
		SOURCE	19.7	13.9	5.8	
	255°	TDV-E	207.3	137.8	69.5	
		TDV-T	207.3	137.8	69.5	
		SOURCE	19.6	13.9	5.8	
	300°	TDV-E	196.3	137.2	59.0	Worst Case
		TDV-T	196.3	137.2	59.0	Worst Case
		SOURCE	18.7	13.9	4.8	Worst Case
	345°	TDV-E	204.8	137.2	67.6	
		TDV-T	204.8	137.2	67.6	
		SOURCE	19.5	13.8	5.6	
C	Climate Zone 13 Fresno					
	30°	TDV-E	325.5	196.8	128.7	
		TDV-T	325.5	196.8	128.7	
		SOURCE	26.0	14.0	12.0	
	75°	TDV-E	226.3	205.0	21.3	
		TDV-T	226.3	205.0	21.3	
		SOURCE	16.9	14.4	2.5	
	120°	TDV-E	237.0	202.5	34.4	
		TDV-T	237.0	202.5	34.4	
		SOURCE	16.8	14.2	2.6	
	165°	TDV-E	301.4	192.0	109.4	
		TDV-T	301.4	192.0	109.4	
		SOURCE	24.1	13.7	10.4	
	210°	TDV-E	213.8	195.0	18.9	Worst Case
		TDV-T	213.8	195.0	18.9	Worst Case
		SOURCE	16.2	14.0	2.2	Worst Case
	255°	TDV-E	226.6	202.6	24.1	
		TDV-T	226.6	202.6	24.1	
		SOURCE	16.7	14.2	2.4	
	300°	TDV-E	328.1	201.1	127.1	
		TDV-T	328.1	201.1	127.1	
		SOURCE	26.0	14.1	11.9	
	345°	TDV-E	307.1	192.0	115.1	
		TDV-T	307.1	192.0	115.1	
		SOURCE	24.5	13.6	10.9	
D	Climate Zone 15 Palm Spring-Intl					
	30°	TDV-E	275.9	230.5	45.4	
		TDV-T	275.9	230.5	45.4	
		SOURCE	17.4	13.8	3.6	
	75°	TDV-E	287.0	236.1	50.9	
		TDV-T	287.0	236.1	50.9	
		SOURCE	18.2	14.0	4.1	
	120°	TDV-E	283.2	233.1	50.2	
		TDV-T	283.2	233.1	50.2	
		SOURCE	17.7	13.7	4.0	
	165°	TDV-E	334.4	224.9	109.5	
		TDV-T	334.4	224.9	109.5	
		SOURCE	23.9	13.3	10.6	
	210°	TDV-E	261.4	228.3	33.2	Worst Case
		TDV-T	261.4	228.3	33.2	Worst Case
		SOURCE	16.8	13.7	3.1	Worst Case
	255°	TDV-E	366.3	234.5	131.8	
		TDV-T	366.3	234.5	131.8	
		SOURCE	26.5	13.9	12.6	
	300°	TDV-E	282.9	233.1	49.8	
		TDV-T	282.9	233.1	49.8	
		SOURCE	17.5	13.7	3.8	
	345°	TDV-E	342.6	226.1	116.5	
		TDV-T	342.6	226.1	116.5	
		SOURCE	24.5	13.3	11.2	

PC DESIGN REVIEW INFORMATION

Title 24-2022, Part 6, Energy Code

Model Name and Option: PC 50x32 — Calculation Date/Time of Energy Report: 9/19/2023
Total Floor Area: 1600 — DSA Application:
HVAC System Type: VSHP

CZ Group	Climate Zone / Azimuth (Front Orientation)	Metric	Standard Design	Proposed Design	Margin	Worst Case
A	Climate Zone 16 Blue Canyon					
	30°	TDV-E	327.4	248.6	78.8	
		TDV-T	327.4	248.6	78.8	
		SOURCE	47.4	23.8	23.6	
	75°	TDV-E	291.5	251.2	40.2	Worst Case
		TDV-T	291.5	251.2	40.2	Worst Case
		SOURCE	36.9	24.0	12.9	Worst Case
	120°	TDV-E	330.0	251.6	78.5	
		TDV-T	330.0	251.6	78.5	
		SOURCE	47.7	24.1	23.6	
	165°	TDV-E	310.8	248.1	62.7	
		TDV-T	310.8	248.1	62.7	
		SOURCE	46.8	23.8	23.0	
	210°	TDV-E	324.2	248.6	75.6	
		TDV-T	324.2	248.6	75.6	
		SOURCE	47.4	23.8	23.6	
	255°	TDV-E	295.5	250.9	44.6	
		TDV-T	295.5	250.9	44.6	
		SOURCE	37.0	24.0	13.1	
	300°	TDV-E	325.6	251.0	74.6	
		TDV-T	325.6	251.0	74.6	
		SOURCE	47.3	24.0	23.3	
	345°	TDV-E	316.9	247.7	69.2	
		TDV-T	316.9	247.7	69.2	
		SOURCE	46.8	23.7	23.0	
B	Climate Zone 05 Santa Maria					
	30°	TDV-E	232.9	150.8	82.1	
		TDV-T	232.9	150.8	82.1	
		SOURCE	21.4	14.9	6.6	
	75°	TDV-E	233.7	150.6	83.1	
		TDV-T	233.7	150.6	83.1	
		SOURCE	21.6	14.9	6.7	
	120°	TDV-E	221.1	149.5	71.6	
		TDV-T	221.1	149.5	71.6	
		SOURCE	20.6	14.9	5.8	
	165°	TDV-E	217.2	148.2	69.1	
		TDV-T	217.2	148.2	69.1	
		SOURCE	20.3	14.8	5.5	
	210°	TDV-E	225.9	149.8	76.1	
		TDV-T	225.9	149.8	76.1	
		SOURCE	20.9	14.8	6.1	
	255°	TDV-E	226.4	149.5	76.9	
		TDV-T	226.4	149.5	76.9	
		SOURCE	21.0	14.8	6.2	
	300°	TDV-E	215.6	148.9	66.7	Worst Case
		TDV-T	215.6	148.9	66.7	Worst Case
		SOURCE	20.1	14.8	5.3	Worst Case
	345°	TDV-E	222.5	148.7	73.8	
		TDV-T	222.5	148.7	73.8	
		SOURCE	20.6	14.7	5.9	
C	Climate Zone 13 Fresno					
	30°	TDV-E	309.6	247.9	61.7	
		TDV-T	309.6	247.9	61.7	
		SOURCE	24.5	18.7	5.9	
	75°	TDV-E	323.5	254.7	68.9	
		TDV-T	323.5	254.7	68.9	
		SOURCE	25.5	18.9	6.6	
	120°	TDV-E	316.0	253.0	63.0	
		TDV-T	316.0	253.0	63.0	
		SOURCE	25.0	18.9	6.1	
	165°	TDV-E	286.1	244.3	41.8	Worst Case
		TDV-T	286.1	244.3	41.8	Worst Case
		SOURCE	22.8	18.4	4.3	Worst Case
	210°	TDV-E	303.2	246.7	56.5	
		TDV-T	303.2	246.7	56.5	
		SOURCE	24.1	18.6	5.4	
	255°	TDV-E	315.0	253.1	61.9	
		TDV-T	315.0	253.1	61.9	
		SOURCE	24.9	18.9	6.0	
	300°	TDV-E	308.2	251.9	56.4	
		TDV-T	308.2	251.9	56.4	
		SOURCE	24.3	18.8	5.5	
	345°	TDV-E	290.5	244.4	46.2	
		TDV-T	290.5	244.4	46.2	
		SOURCE	23.1	18.4	4.7	
D	Climate Zone 15 Palm Spring-Intl					
	30°	TDV-E	338.8	284.5	54.3	
		TDV-T	338.8	284.5	54.3	
		SOURCE	24.4	17.8	6.5	
	75°	TDV-E	356.3	289.8	66.5	
		TDV-T	356.3	289.8	66.5	
		SOURCE	25.6	18.0	7.6	
	120°	TDV-E	350.2	287.5	62.7	
		TDV-T	350.2	287.5	62.7	
		SOURCE	25.1	17.9	7.2	
	165°	TDV-E	315.9	280.1	35.9	Worst Case
		TDV-T	315.9	280.1	35.9	Worst Case
		SOURCE	22.5	17.5	5.0	Worst Case
	210°	TDV-E	329.9	282.9	47.0	
		TDV-T	329.9	282.9	47.0	
		SOURCE	23.8	17.8	6.0	
	255°	TDV-E	346.1	288.5	57.6	
		TDV-T	346.1	288.5	57.6	
		SOURCE	24.9	18.0	7.0	
	300°	TDV-E	343.3	287.3	56.1	
		TDV-T	343.3	287.3	56.1	
		SOURCE	24.5	17.8	6.7	
	345°	TDV-E	322.2	281.1	41.2	
		TDV-T	322.2	281.1	41.2	
		SOURCE	22.9	17.5	5.4	

PC DESIGN REVIEW INFORMATION

Title 24-2022, Part 6, Energy Code

Model Name and Option: PC 60x32 — Calculation Date/Time of Energy Report: 9/19/2023
Total Floor Area: 1920 — DSA Application:
HVAC System Type: VSHP

CZ Group	Climate Zone / Azimuth (Front Orientation)	Metric	Standard Design	Proposed Design	Margin	Worst Case
A	Climate Zone 16 Blue Canyon					
	30°	TDV-E	269.2	233.9	35.3	
		TDV-T	269.2	233.9	35.3	
		SOURCE	34.6	22.3	12.3	
	75°	TDV-E	276.4	236.3	40.1	
		TDV-T	276.4	236.3	40.1	
		SOURCE	34.9	22.5	12.4	
	120°	TDV-E	271.2	236.6	34.6	
		TDV-T	271.2	236.6	34.6	
		SOURCE	34.7	22.6	12.1	
	165°	TDV-E	256.7	233.8	23.0	Worst Case
		TDV-T	256.7	233.8	23.0	Worst Case
		SOURCE	34.0	22.3	11.7	Worst Case
	210°	TDV-E	270.4	234.0	36.4	
		TDV-T	270.4	234.0	36.4	
		SOURCE	34.7	22.3	12.4	
	255°	TDV-E	282.9	236.0	46.9	
		TDV-T	282.9	236.0	46.9	
		SOURCE	35.1	22.5	12.7	
	300°	TDV-E	270.7	236.2	34.5	
		TDV-T	270.7	236.2	34.5	
		SOURCE	34.5	22.5	12.0	
	345°	TDV-E	260.8	233.3	27.5	
		TDV-T	260.8	233.3	27.5	
		SOURCE	34.0	22.3	11.7	
B	Climate Zone 05 Santa Maria					
	30°	TDV-E	192.3	140.8	51.5	
		TDV-T	192.3	140.8	51.5	
		SOURCE	17.9	13.9	4.0	
	75°	TDV-E	191.9	140.4	51.5	
		TDV-T	191.9	140.4	51.5	
		SOURCE	17.9	13.8	4.0	
	120°	TDV-E	212.8	139.5	73.3	
		TDV-T	212.8	139.5	73.3	
		SOURCE	19.7	13.9	5.9	
	165°	TDV-E	210.0	138.6	71.4	
		TDV-T	210.0	138.6	71.4	
		SOURCE	19.5	13.8	5.7	
	210°	TDV-E	187.3	139.9	47.3	Worst Case
		TDV-T	187.3	139.9	47.3	Worst Case
		SOURCE	17.5	13.8	3.6	Worst Case
	255°	TDV-E	217.8	139.6	78.3	
		TDV-T	217.8	139.6	78.3	
		SOURCE	20.0	13.8	6.3	
	300°	TDV-E	208.4	139.2	69.3	
		TDV-T	208.4	139.2	69.3	
		SOURCE	19.3	13.8	5.5	
	345°	TDV-E	214.1	139.0	75.1	
		TDV-T	214.1	139.0	75.1	
		SOURCE	19.7	13.8	6.0	
C	Climate Zone 13 Fresno					
	30°	TDV-E	297.8	232.8	64.9	
		TDV-T	297.8	232.8	64.9	
		SOURCE	23.4	17.5	6.0	
	75°	TDV-E	309.4	238.4	71.0	
		TDV-T	309.4	238.4	71.0	
		SOURCE	24.3	17.7	6.6	
	120°	TDV-E	302.8	237.0	65.8	
		TDV-T	302.8	237.0	65.8	
		SOURCE	23.8	17.7	6.2	
	165°	TDV-E	281.1	229.8	51.3	Worst Case
		TDV-T	281.1	229.8	51.3	Worst Case
		SOURCE	22.1	17.3	4.9	Worst Case
	210°	TDV-E	292.8	231.8	60.9	
		TDV-T	292.8	231.8	60.9	
		SOURCE	23.1	17.4	5.7	
	255°	TDV-E	302.2	237.2	65.1	
		TDV-T	302.2	237.2	65.1	
		SOURCE	23.7	17.6	6.1	
	300°	TDV-E	297.8	236.2	61.6	
		TDV-T	297.8	236.2	61.6	
		SOURCE	23.4	17.6	5.8	
	345°	TDV-E	281.2	229.8	51.5	
		TDV-T	281.2	229.8	51.5	
		SOURCE	22.2	17.2	5.0	
D	Climate Zone 15 Palm Spring-Intl					
	30°	TDV-E	323.9	266.3	57.7	
		TDV-T	236.2	217.2	18.9	
		SOURCE	19.6	14.8	4.8	
	75°	TDV-E	340.0	270.2	69.8	
		TDV-T	252.3	222.2	30.0	
		SOURCE	20.8	15.1	5.7	
	120°	TDV-E	334.8	268.3	66.5	
		TDV-T	247.0	221.7	25.3	
		SOURCE	20.4	15.0	5.4	
	165°	TDV-E	305.4	262.6	42.8	Worst Case
		TDV-T	217.7	213.5	4.2	Worst Case
		SOURCE	18.1	14.5	3.6	Worst Case
	210°	TDV-E	318.8	265.0	53.8	
		TDV-T	231.0	216.0	15.0	
		SOURCE	19.4	14.8	4.5	
	255°	TDV-E	333.3	269.4	63.9	
		TDV-T	245.5	221.3	24.2	
		SOURCE	20.4	15.0	5.4	
	300°	TDV-E	324.0	268.4	55.6	
		TDV-T	236.3	220.1	16.2	
		SOURCE	19.5	14.8	4.7	
	345°	TDV-E	310.4	263.4	47.0	
		TDV-T	222.7	214.3	8.4	
		SOURCE	18.4	14.5	3.9	

IDENTIFICATION STAMP
DIV. OF THE STATE ARCHITECT
APP: 02-122533 INC:
REVIEWED FOR
SS ☑ FLS ☑ ACS ☑
DATE: 05/22/2024

AMS®
American Modular Systems
787 Spreckels Ave., Manteca, CA 95336
Phone (209) 825-1921 Fax (209) 825-7018
www.americanmodular.com

INTELLECTUAL-PROPERTY & PROPRIETARY RIGHTS STATEMENT
COPYRIGHT © AMERICAN MODULAR SYSTEMS (AMS)
AMS OWNS ALL COPYRIGHT AND OTHER INTELLECTUAL-PROPERTY AND PROPRIETARY RIGHTS IN THESE DRAWINGS, SPECIFICATIONS, AND THE MATERIAL CONTAINED HEREIN. CERTAIN ELEMENTS SHOWN IN THESE DOCUMENTS ARE REGISTERED TRADEMARKS OF AMS. ALL PATENTABLE MATERIALS CONTAINED IN THESE DOCUMENTS AND ORIGINATING WITH AMS WILL REMAIN THE SOLE PROPERTY OF AMS. THESE DRAWING, SPECIFICATIONS, AND THE MATERIAL CONTAINED HEREIN MAY NOT BE REPRODUCED, TRANSMITTED, COPIED, DISTRIBUTED, MODIFIED, OR OTHERWISE DISPOSED OF (DIRECTLY OR INDIRECTLY) AND MAY NOT BE USED (IN WHOLE OR IN PART) TO ASSIST IN THE CONSTRUCTION, DESIGN, OR OTHER MAKING OF, OR FOR THE PURPOSE OF FURNISHING ANY INFORMATION FOR THE CONSTRUCTION, DESIGN, OR OTHER MAKING OF, ANY BUILDINGS (MODULAR OR OTHERWISE), DRAWINGS, SPECIFICATIONS, PRINTS, APPARATUS, OR PARTS THEREOF, EXCEPT AS EXPRESSLY PERMITTED BY WRITTEN CONSENT OF, OR IN A WRITTEN AGREEMENT WITH, AMS. SUBMITTAL OR DISTRIBUTION TO MEET OFFICIAL REGULATORY REQUIREMENTS WILL NOT BE CONSTRUED AS PUBLICATION IN DEROGATION OF AMS'S COPYRIGHT OR OTHER INTELLECTUAL-PROPERTY OR PROPRIETARY RIGHTS.

PRE-CHECKED SET NAME
30' x 32' THRU 60' x 32'
2GO®

SITE SPECIFIC PROJECT NAME
.
.
.

APPROVED
DIV. OF THE STATE ARCHITECT
APP: 04-122041 PC
REVIEWED FOR
SS ☑ FLS ☑ ACS ☑ CG ☑
DATE: 04/05/2024

☐ 2022 CBC PRE-CHECK (PC) DOCUMENT
A SEPARATE PROJECT APPLICATION FOR CONSTRUCTION IS REQUIRED.

MANUFACTURER PROFESSIONAL OF RECORD ON PC

LICENSED ARCHITECT
RANDAL PATRICK CAVANAGH
No. C12631
Ren. 3-31-25
STATE OF CALIFORNIA

THESE DRAWINGS ARE PRELIMINARY AND NOT FOR CONSTRUCTION UNLESS STAMPED & SIGNED BY THE DESIGN PROFESSIONAL OF RECORD.

REVISIONS
1
2
3
4

DRAWN BY: A.A.
SCALE: AS NOTED
DATE: DD/MM/YY
PROJECT NO: XXXX-XX

SHEET TITLE:
ENERGY CALCULATIONS SUMMATION SHEET

SHEET NUMBER:
EN.1B

CERTIFICATE OF COMPLIANCE — **NRCC-SAB-E**

This document is used to demonstrate compliance with prescriptive PV and battery requirements in 140.10/ 170.2 for nonresidential, multifamily and mixed-use buildings and prescriptive solar thermal requirements in 170.2(d)3C for multifamily and hotel/ motel occupancies. When PV/battery/solar thermal requirements don't apply or are traded using the performance approach, this document demonstrates compliance with mandatory solar readiness requirements in 110.10/ 160.8 for newly constructed buildings which are either multifamily ten stories or fewer, hotel/motel ten stories or fewer or all other nonresidential buildings three stories or fewer. It is also used to demonstrate compliance with solar readiness in 110.10/ 160.8 for additions to nonresidential, multifamily or hotel/motel building types which add more than 2,000 ft^2 of roof area. Alterations, or additions of less than 2,000 ft^2 of roof area, are not required to comply with solar readiness, solar PV and battery requirements and do not need to complete this document.

Project Name:	AMS PC 30-60x32	**Report Page:**	**(Page 1 of 7)**
Project Address:		**Date Prepared:**	2024-01-31T19:56:30-05:00

A. GENERAL INFORMATION

01	Project Location (city)	Palm Spring-Intl	04	Building Occupancies	School or Classroom
02	Climate Zone	15	05	Construction Type	New construction
03	Conditioned Floor Area (ft^2)	1920	06	Number of Stories	Bldg <= 3 stories

B. PROJECT SCOPE

The compliance path the project is using to comply per 110.10(b)1B/ 140.10/ 170.2(g and h) is indicated below.

Compliance with Solar Readiness Requirements in 110.10(b)1B

	01	
☒	Provide Solar Ready Area no exceptions	The project has allocated a solar zone on the roof plan per requirements in §110.10(b), as documented in Table F.
☐	Exception to Solar Ready Area: Installed Solar Photovoltaic System	The project includes a permanently installed solar electric system having a nameplate DC power rating, measured under Standard Test Conditions, of no less than one watt per square foot of roof area as documented in Table G.
☐	Exception to Solar Ready Area: Installed Solar Water Heating System	The project is a hotel/motel or high-rise multifamily occupancy and includes a permanently installed domestic solar water-heating system complying with 170.2(d)3C and Reference Residential Appendix RA4, as documented in Table H.
☐	Exception to Solar Ready Area: Smart Thermostat and Alternative Energy Efficiency Measure	The project is a multifamily occupancy where all thermostats in each dwelling unit comply with §110.12(a) AND at least one additional measure listed in Exception 4 to §110.10(b)1B is installed, as documented in Table I.
☐	Exception to Solar Ready Area: Roof is designed for vehicular traffic, parking or for heliport	Plan sheet showing roof designed for vehicular traffic, parking or heliport
☐	Exception to Solar Ready Area: Roof too small	The project is new construction and has a total roof area <= 533 square feet[1]
☐	Exception to Solar Ready Area: Number of building stories	The project is nonresidential > 3 stories or multifamily/ hotel/motel > 10 stories.

[1]FOOTNOTE: Buildings with roof area <=533 ft^2 would have a required solar zone < 80 ft^2 and are therefore exempt per 110.10(b)1.

Compliance with Solar Photovoltaic (PV) and Battery Requirements in 140.10/ 170.2(g and h)

	01	
☐	Provided PV system and battery storage sized per 140.10/ 170.2 (g and h)	The project has included an installed PV system and battery storage system per requirements in 140.10/ 170.2(g and h) as documented in Table J.
☐	Exception to PV and Battery: Not enough Solar Access Roof Area	The total of all available Solar Access Roof Area(s) of the project site is less than three percent of the conditioned floor area as documented in Table J.
☐	Exception to PV and Battery: Required PV < 4kW	The required PV system size is less than 4 kW dc as documented in Table J..
☐	Exception to PV and Battery: No contiguous Solar Access Roof Area	The Solar Access Roof Area(s) of the project site contains less than 80 contiguous square feet as documented in Table J.
☐	Exception to PV and Battery: Can't meet snow load	The project has a roof design where the enforcement authority has verified it is not possible for the PV system, including panels, modules, components, supports, and attachments to the roof structure, to meet ASCE 7-16 Chapter 7, Snow Loads.
☐	Exception to PV and Battery: Multi-tenant without VNEM or Community Solar	The project is a multi-tenant building in an area where a load serving entity does not provide either a Virtual Net Metering (VNEM) or community solar program.
☒	The prescriptive PV/battery requirement has been traded off using the performance compliance approach as documented on the PRF Certificate of Compliance form.	

Compliance with Solar Thermal Water Heating Requirements in 170.2(d)3C (Multifamily and hotel/ motel occupancies only)

	01	
☐		The project includes a hotel/motel or multifamily occupancy with a gas or propane central water-heating system (serves 2+ dwelling units) and includes a permanently installed domestic solar water-heating system to comply with 170.2(d)3C and Reference Residential Appendix RA4, as documented in Table H. Compliance meets Exception 2 to solar ready requirements in 110.10(b).

C. COMPLIANCE RESULTS

Results in this table are automatically calculated from data input and calculations in Tables F through I. Note: If any cell on this table says "DOES NOT COMPLY" or "COMPLIES with Exceptional Conditions" refer to Table D. for guidance or see the applicable Table referenced below.

Allocated Solar Zone				Installed PV System				Installed SWH System				Smart Tstat and Alternative EE Measure		Compliance Results
01		02	OR	03		04	OR	05		06	OR	07	08	COMPLIES
Required Minimum Area (ft^2)	<=	Designated Area (ft^2)		Required Minimum DC Power Rating (Watts)	<=	Designed DC Power Rating (Watts)		Required Minimum Solar Savings Fraction	<=	Designed/Rated Solar Savings Fraction		JA5 Compliant Thermostat Specified?	Alternative Energy Efficiency Measure	
(See Table F)				(See Tables G or J)				(See Table H)				(See Table I)		
288	<=	288	OR		<=		OR		<=		OR			
A2.0 Roofing Plan for Solar Zones				Location in construction documents showing the location for inverters and metering equipment and a pathway for the routing of conduit/ plumbing to the electrical service/ water heating system per §110.10(c).										COMPLIES
Battery storage system design meets the minimum requirements in Joint Appendix JA12 and the minimum energy (kWh)/ power (kW) capacity per Table J.														Not Applicable

D. EXCEPTIONAL CONDITIONS

This table is auto-filled with uneditable comments because of selections made or data entered in tables throughout the form.

E. ADDITIONAL REMARKS

This table is includes remarks made by the permit applicant to the Authority Having Jurisdiction.

F. ALLOCATED SOLAR ZONE

This table is completed if the project is designating a solar zone to comply with §110.10(b)1B. New construction consider the total roof area; Additions consider newly added roof area. This table demonstrates that the project has designated the minimum area required for the Allocated Solar Zone, and also that the requirements for Solar Zone Subareas have been met. Each subarea must be shown on a roof plan or documented in construction documents. The solar zones must also comply with fire code requirements, including, but not limited to, setback and pathway requirements. Requirements for interconnection pathways must also be included in construction documents, and the location is specified in this table.

Required Minimum Solar Zone

01	02	03	04	05	06			07	08
					Potential Solar Zone Areas: Roof areas with >= 70% Solar Access				
Minimum Solar Zone Area Calculation Method	Total New or Added Roof Area (ft^2)	Total New or Added Roof Area Covered with Skylights (ft^2)	Minimum Solar Zone Based on Total or Added Roof Area (0.15 x (Roof-Skylt)) (ft^2)	Method/ Tools Used to Determine Annual Solar Access for Potential Zones[1]	Low-Sloped Area (<= 2:12 pitch) (ft^2)	Steep-Sloped Area (> 2:12 pitch) Oriented 90 ° - 300 ° (ft^2)	Total Potential Solar Zone Area (ft^2)	Minimum Solar Zone Based on Potential Zone (0.5 x (Total Potential Zone)) (ft^2)	Required Minimum Solar Zone Area (ft^2)
Total New or Added Roof Area	1920	0	288						288

Designated Solar Zone Subareas

09	10	11	12	13	14	15	16	17	18	19
Subarea Name or Tag	Building Plan Reference	Roof or Overhang Slope (Low <= 2:12 pitch) (Steep > 2:12 pitch)	Is Steep-Sloped Roof or Overhang between 90 and 300 degrees?	Subarea Complies with Title 24, Part 9	Solar Zone Subarea Free of Obstructions per §110.10(b)3A	Subarea is Required Distance from Potential Obstructions per §110.10(b)3B	Is the Smallest Dimension 5 feet or greater?	Min. Area Required per Subarea (ft^2)	Designated Area (ft^2)	Subarea Complies?
A2.0 Roofing Plan for Solar Zones	A2.0 Roofing Plan for Solar Zones	Low slope		Yes	Yes	Yes	Yes	80	288	COMPLIES

Interconnection Pathways

Location in construction documents showing the location for inverters and metering equipment and a pathway for the routing of conduit/ plumbing to the electrical service/ water heating system per §110.10(c).	A2.0 Roofing Plan for Solar Zones

[1]FOOTNOTE: This field is used to document how the percentage of annual solar access was determined per §110.10(b)1B. Solar access is the ratio of solar insolation including shade to the solar insolation without shade. Shading from obstructions located on the roof or any other part of the building shall not be included in the determination of annual solar access.

G. PERMANENTLY INSTALLED SOLAR PV FOR SOLAR READY EXCEPTION

This section does not apply to this project.

H. PERMANENTLY INSTALLED SOLAR HOT WATER SYSTEMS

This section does not apply to this project.

I. SMART THERMOSTATS AND ALTERNATIVE EFFICIENCY MEASURE FOR SOLAR READY EXCEPTION

This section does not apply to this project.

J. PHOTOVOLTAIC (PV) AND BATTERY SYSTEMS

This section does not apply to this project.

K. DECLARATION OF REQUIRED CERTIFICATES OF INSTALLATION

Selections have been made based on information provided in this document. If any selections have been changed by the permit applicant, an explanation should be included Table E. Additional Remarks and ExceptionalConditionMessageCCSABE += UserChangedSelectionInCI. These documents must be provided to the building inspector during construction and can be found online

Form/Title
NRCI-SAB-01-E - Must be submitted for all buildings that must comply with solar readiness or PV/Battery requirements.

L. DECLARATION OF REQUIRED CERTIFICATES OF ACCEPTANCE

There are no forms required for this project.

DOCUMENTATION AUTHOR'S DECLARATION STATEMENT

I certify that this Certificate of Compliance documentation is accurate and complete.

Documentation Author Name:	Hans Marsman	Documentation Author Signature:	Digitally signed by Hans Marsman, LEED AP, CEA Date: 2024.01.31 15:07:47-06'00'
Company:	Marsman Consulting	Signature Date:	
Address:	1150 J Street #409	CEA/ HERS Certification Identification (if applicable):	
City/State/Zip:	San Diego, CA 92101	Phone:	(619) 573-6374

RESPONSIBLE PERSON'S DECLARATION STATEMENT

I certify the following under penalty of perjury, under the laws of the State of California:

1. The information provided on this Certificate of Compliance is true and correct.
2. I am eligible under Division 3 of the Business and Professions Code to accept responsibility for the building design or system design identified on this Certificate of Compliance (responsible designer)
3. The energy features and performance specifications, materials, components, and manufactured devices for the building design or system design identified on this Certificate of Compliance conform to the requirements of Title 24, Part 1 and Part 6 of the California Code of Regulations.
4. The building design features or system design features identified on this Certificate of Compliance are consistent with the information provided on other applicable compliance documents, worksheets, calculations, plans and specifications submitted to the enforcement agency for approval with this building permit application.
5. I will ensure that a completed signed copy of this Certificate of Compliance shall be made available with the building permit(s) issued for the building, and made available to the enforcement agency for all applicable inspections. I understand that a completed signed copy of this Certificate of Compliance is required to be included with the documentation the builder provides to the building owner at occupancy.

Responsible Designer Name:	Randall P Cavannagh	Responsible Designer Signature:	
Company:	American Modular Systems | Gen7 Schools	Date Signed:	01/21/2024
Address:	787 Spreckels Avenue	License:	C12631
City/State/Zip:	Manteca, CA 95336	Phone:	209.825.1921

IDENTIFICATION STAMP
DIV. OF THE STATE ARCHITECT
APP: 02-122533 INC:
REVIEWED FOR
SS ☑ FLS ☑ ACS ☑
DATE: 05/22/2024

AMS®
American Modular Systems
787 Spreckels Ave., Manteca, CA 95336
Phone (209) 825-1921 Fax (209) 825-7018
www.americanmodular.com

INTELLECTUAL-PROPERTY & PROPRIETARY RIGHTS STATEMENT
COPYRIGHT © AMERICAN MODULAR SYSTEMS (AMS)
AMS OWNS ALL COPYRIGHT AND OTHER INTELLECTUAL-PROPERTY AND PROPRIETARY RIGHTS IN THESE DRAWINGS, SPECIFICATIONS, AND THE MATERIAL CONTAINED HEREIN. CERTAIN ELEMENTS SHOWN IN THESE DOCUMENTS ARE REGISTERED TRADEMARKS OF AMS. ALL PATENTABLE MATERIALS CONTAINED IN THESE DOCUMENTS AND ORIGINATING WITH AMS WILL REMAIN THE SOLE PROPERTY OF AMS. THESE DRAWING, SPECIFICATIONS AND THE MATERIAL CONTAINED HEREIN MAY NOT BE REPRODUCED, TRANSMITTED, COPIED, DISTRIBUTED, MODIFIED, OR OTHERWISE DISPOSED OF (DIRECTLY OR INDIRECTLY) AND MAY NOT BE USED (IN WHOLE OR IN PART) TO ASSIST IN THE CONSTRUCTION, DESIGN, OR OTHER MAKING OF, OR FOR THE PURPOSE OF FURNISHING ANY INFORMATION FOR THE CONSTRUCTION, DESIGN, OR OTHER MAKING OF, ANY BUILDINGS (MODULAR OR OTHERWISE), DRAWINGS, SPECIFICATIONS, PRINTS, APPARATUS, OR PARTS THEREOF, EXCEPT AS EXPRESSLY PERMITTED BY WRITTEN CONSENT OF, OR IN A WRITTEN AGREEMENT WITH, AMS. SUBMITTAL OR DISTRIBUTION TO MEET OFFICIAL REGULATORY REQUIREMENTS WILL NOT BE CONSTRUED AS PUBLICATION IN DEROGATION OF AMS'S COPYRIGHT OR OTHER INTELLECTUAL-PROPERTY OR PROPRIETARY RIGHTS.

PRE-CHECKED SET NAME
30' x 32' THRU 60' x 32'
2GO®

SITE SPECIFIC PROJECT NAME
.
.
.

APPROVED
DIV. OF THE STATE ARCHITECT
APP: 04-122041 PC
REVIEWED FOR
SS ☑ FLS ☑ ACS ☑ CG ☑
DATE: 04/05/2024

☐ **2022 CBC PRE-CHECK (PC) DOCUMENT**
A SEPARATE PROJECT APPLICATION FOR CONSTRUCTION IS REQUIRED.

MANUFACTURER PROFESSIONAL OF RECORD ON PC

LICENSED ARCHITECT — RANDALL PATRICK CAVANNAGH — No. C12631 — Ren. 3-31-25 — STATE OF CALIFORNIA

THESE DRAWINGS ARE PRELIMINARY AND NOT FOR CONSTRUCTION UNLESS STAMPED & SIGNED BY THE DESIGN PROFESSIONAL OF RECORD.

REVISIONS
1
2
3
4

DRAWN BY:	A.A.
SCALE:	AS NOTED
DATE:	DD/MM/YY
PROJECT NO:	XXXX-XX

SHEET TITLE:
ENERGY CALCULATIONS SUMMATION SHEET

SHEET NUMBER:
EN.1C

Project Name:	PC 30x32 - 2Go	Date Prepared:	2023-09-19

A. General Information

1	Project Name	PC 30x32 - 2Go			
2	Run Title	Title 24 Analysis			
3	Project Location				
4	City	Palm Spring-Intl	5	Standards Version	Compliance 2022
6	Zip code	92240	7	Compliance Software (version)	CBECC 2022.3.0 (1302)
8	Climate Zone	15	9	Building Orientation (deg)	345
10	Building Type(s)	• Nonresidential	11	Weather File	PALM-SPRINGS_STYP20.epw
12	Project Scope	• New complete scope	13	Number of Dwelling Units	0
14	Total Conditioned Floor Area in Scope (ft^2)	960	15	Total # of hotel/motel rooms	0
16	Total Unconditioned Floor Area (ft^2)	0	17	Fuel Type	None
18	Nonresidential Conditioned Floor Area	960	19	Total # of Stories (Habitable Above Grade)	1
20	Residential Conditioned Floor Area	0			

B. PROJECT SUMMARY

Table B shows which building components are included in the performance calculation. If indicated as not included, the project must show compliance prescriptively if within the permit application.

Building Components Complying via Performance						Building Components Complying Prescriptively	
Envelope (See Table G)	Nonres	Performance	Solar Thermal Water Heating (See Table I3)	☐	Performance	The following building components are ONLY eligible for prescriptive compliance and should be documented on the NRCC form listed if within the scope of the permit application (i.e. compliance will not be shown on the NRCC-PRF-E).	
	MultiFam	Not Included		☒	Not Included		
Mechanical (See Table H)	Nonres	Performance	Covered Process: Commercial Kitchens (see Table J)	☐	Performance	Indoor Lighting (Unconditioned) 140.6 & 170.2(e)	NRCC-LTI-E is required
	MultiFam	Not Included		☒	Not Included	Outdoor Lighting 140.7 & 170.2(e)	NRCC-LTO-E is required
Domestic Hot Water (See Table I)	Nonres	Not Included	Covered Process: Laboratory Exhaust (see Table J)	☐	Performance	Sign Lighting 140.8 & 170.2(e)	NRCC-LTS-E is required
	MultiFam	Not Included		☒	Not Included	**Building Components Complying with Mandatory Measures**	
Lighting (Indoor Conditioned, see Table K)	Nonres	Performance	Photovoltaics (see Table F)	☐	Performance	Electrical power systems, commissioning, solar ready, elevator and escalator requirements are mandatory and should be documented on the NRCC form listed if applicable (i.e. compliance will not be shown on the NRCC-PRF-E.)	
	MultiFam	Not Included		☒	Not Included	Electrical Power Distribution 110.11	NRCC-ELC-E is required
			Battery (see Table F)	☐	Performance	Commissioning 120.8	NRCC-CXR-E is required
				☒	Not Included	Solar and Battery 110.10	NRCC-SAB-E is required

C1. COMPLIANCE SUMMARY

	COMPLIES[3]		
	Time Dependent Valuaton (TDV)		Source Energy Use
	Efficiency[1] (kBtu/ft^2 - yr)	Total[2] (kBtu/ft^2 - yr)	Total[2] (kBtu/ft^2 - yr)
Standard Design	346.14	346.14	24.85
Proposed Design	279.77	279.77	17.51
Compliance Margins	**66.37**	**66.37**	**7.34**
	Pass	**Pass**	**Pass**

[1] Efficiency measures include improvements like a better building envelope and more efficient equipment
[2] Compliance Totals include efficiency, photovoltaics and batteries
[3] New Construction, Complete Addition Scope: Building complies when all efficiency and total compliance margins are greater than or equal to zero and unmet load hour limits are not exceeded
Existing, Addition and Alteration Scope: Building complies when efficiency compliance margin is greater than or equal to zero and unmet load hour limits are not exceeded

C2. TDV ENERGY COMPLIANCE RESULTS FOR PERFORMANCE COMPONENTS (Annual TDV Energy Use, kBtu/ft^2 - yr)

COMPLIES[2]			
Energy Component	Standard Design (TDV)	Proposed Design (TDV)	Compliance Margin (TDV)[1]
Space Heating	6.25	20.88	-14.63
Space Cooling	165.17	206.11	-40.94
Indoor Fans	156.3	36.73	119.57
Heat Rejection	0	0	0
Pumps & Misc.	0	0	0
Domestic Hot Water	0	0	0
Indoor Lighting	18.42	16.05	2.37
Flexibility	---	---	---
EFFICIENCY COMPLIANCE TOTAL	**346.14**	**279.77**	**66.37 (19.2%)**
Photovoltaics	---	---	---
Batteries	---	---	---
TOTAL COMPLIANCE	**346.14**	**279.77**	**66.37 (19.2%)**

[1] Notes: This number in parenthesis following the Compliance Margin in column 4, represents the Percent Better than Standard.

C3. TDV ENERGY RESULTS FOR NON-REGULATED COMPONENTS[1]

Non-Regulated Energy Component	Standard Design (TDV)	Proposed Design (TDV)	Compliance Margin (TDV)[1]
Receptacle	66.69	66.69	---
Process	---	---	---
Other Ltg	---	---	---
Process Motors	---	---	---
TOTAL (TOTAL COMPLIANCE + NON-REGULATED COMPONENTS)	**412.83**	**346.46**	**66.37 (16.1%)**

[1] Notes: This table is not used for Energy Code Compliance.

C4. SOURCE ENERGY COMPLIANCE RESULTS FOR PERFORMANCE COMPONENTS (Annual SOURCE Energy Use, kBtu/ft^2 /yr)

COMPLIES[2]			
Energy Component	Standard Design (SOURCE)	Proposed Design (SOURCE)	Compliance Margin (SOURCE)[1]
Space Heating	0.86	3.02	-2.16
Space Cooling	7.97	9.5	-1.53
Indoor Fans	14.09	3.49	10.6
Heat Rejection	0	0	0
Pumps & Misc.	0	0	0
Domestic Hot Water	0	0	0
Indoor Lighting	1.93	1.5	0.43
Flexibility	---	---	---
EFFICIENCY COMPLIANCE TOTAL	**24.85**	**17.51**	**7.34 (29.5%)**
Photovoltaics	---	---	---
Batteries	---	---	---
TOTAL COMPLIANCE	**24.85**	**17.51**	**7.34 (29.5%)**

[1] Notes: This number in parenthesis following the Compliance Margin in column 4, represents the Percent Better than Standard.

C5. SOURCE ENERGY RESULTS FOR NON-REGULATED COMPONENTS[1]

Non-Regulated Energy Component	Standard Design (SOURCE)	Proposed Design (SOURCE)	Compliance Margin (SOURCE)[1]
Receptacle	4.92	4.92	---
Process	---	---	---
Other Ltg	---	---	---
Process Motors	---	---	---
TOTAL (TOTAL COMPLIANCE + NON-REGULATED COMPONENTS)	**29.77**	**22.43**	**7.34 (24.7%)**

[1] Notes: This table is not used for Energy Code Compliance.

C6. 'ABOVE CODE' QUALIFICATIONS

☐ This project is pursuing CalGreen Tier 1 ☐ This project is pursuing CalGreen Tier 2

C7. ENERGY USE SUMMARY

Energy Component	Standard Design Site (MWh)	Proposed Design Site (MWh)	Margin (MWh)	Standard Design Site (MBtu)	Proposed Design Site (MBtu)	Margin (MBtu)
Space Heating	0.2	0.6	-0.4	---	---	---
Space Cooling	4.9	5.8	-0.9	---	---	---
Indoor Fans	5.3	1.2	4.1	---	---	---
Heat Rejection	---	---	---	---	---	---
Pumps & Misc.	---	---	---	---	---	---
Domestic Hot Water	---	---	---	---	---	---
Indoor Lighting	0.6	0.6	0	---	---	---
Flexibility	---	---	---	---	---	---
EFFICIENCY TOTAL	**11**	**8.2**	**2.8**	**0**	**0**	**0**
Photovoltaics	---	---	---	---	---	---
Batteries	---	---	---	---	---	---
ENERGY USE SUBTOTAL	**11**	**8.2**	**2.8**	**0**	**0**	**0**
Receptacle	2.5	2.5	0	---	---	---
Process	---	---	---	---	---	---
Other Ltg	---	---	---	---	---	---
Process Motors	---	---	---	---	---	---
ENERGY USE TOTAL	**13.5**	**10.7**	**2.8**	**0**	**0**	**0**

C8. ENERGY USE INTENSITY (EUI)

	Standard Design (kBtu/ft^2 / yr)	Proposed Design (kBtu/ft^2 / yr)	Margin (kBtu/ft^2 / yr)	Margin Percentage
GROSS EUI[1]	47.98	38.03	9.95	20.74
NET EUI[1]	47.98	38.03	9.95	20.74

[1] Notes: Gross EUI is Energy Use Total (not including PV)/Total Building Area. Net EUI is Energy Use Total (including PV)/Total Building Area.

D1. EXCEPTIONAL CONDITIONS

- The building does not include service water heating. Verify that service water heating is not required and is not included in the design.
- Project is claiming Exception 2 to Section 140.10(a): No PV system is required where the required PV system size is less than 4 kWdc.
- Project is claiming Exception 2 to Section 140.10(b): No battery storage system is required in buildings with battery storage system requirements with less than 10 kWh rated capacity.
- Project is claiming Exception 3 to Section 140.10(b): No battery storage system required for tenant spaces less than or equal to 5,000 ft2.

G1. ENVELOPE GENERAL INFORMATION (conditioned spaces only)

01	02	03	04
Opaque Surfaces & Orientation	Total Gross Surface Area (ft^2)	Total Fenestration Area (ft^2)	Window to Wall Ratio (%)
North-Facing[1]	300	160	53.33
East-Facing[2]	320	0	0
South-Facing[3]	300	80	26.67
West-Facing[4]	320	0	0
Total	**1240**	**240**	**19.35**
Roof	960	0	0

Notes
[1]North-Facing is oriented to within 45 degrees of true north, including 45 00'00" east of north (NE), but excluding 45 00'00" west of north (NW),
[2]East-Facing is oriented to within 45 degrees of true east, including 45 00'00" south of east (SE), but excluding 45 00'00" north of east (NE),
[3]South-Facing is oriented to within 45 degrees of true south, including 45 00'00" west of south (SW), but excluding 45 00'00" east of south (SE),
[4]West-Facing is oriented to within 45 degrees of true west, including 45 00'00" north of west (NW), but excluding 45 00'00" south of west (SW),

IDENTIFICATION STAMP
DIV. OF THE STATE ARCHITECT
APP: 02-122533 INC:
REVIEWED FOR
SS ☑ FLS ☑ ACS ☑
DATE: 05/22/2024

AMS®
American Modular Systems
787 Spreckels Ave., Manteca, CA 95336
Phone (209) 825-1921 Fax (209) 825-7018
www.americanmodular.com

INTELLECTUAL-PROPERTY & PROPRIETARY RIGHTS STATEMENT
COPYRIGHT © AMERICAN MODULAR SYSTEMS (AMS)
AMS OWNS ALL COPYRIGHT AND OTHER INTELLECTUAL-PROPERTY AND PROPRIETARY RIGHTS IN THESE DRAWINGS, SPECIFICATIONS, AND THE MATERIAL CONTAINED HEREIN. CERTAIN ELEMENTS SHOWN IN THESE DOCUMENTS ARE REGISTERED TRADEMARKS OF AMS. ALL PATENTABLE MATERIALS CONTAINED IN THESE DOCUMENTS AND ORIGINATING WITH AMS WILL REMAIN THE SOLE PROPERTY OF AMS. THESE DRAWING, SPECIFICATIONS, AND THE MATERIAL CONTAINED HEREIN MAY NOT BE REPRODUCED, TRANSMITTED, COPIED, DISTRIBUTED, MODIFIED, OR OTHERWISE DISPOSED OF (DIRECTLY OR INDIRECTLY) AND MAY NOT BE USED (IN WHOLE OR IN PART) TO ASSIST IN THE CONSTRUCTION, DESIGN, OR OTHER MAKING OF, OR FOR THE PURPOSE OF FURNISHING ANY INFORMATION FOR THE CONSTRUCTION, DESIGN, OR OTHER MAKING OF, ANY BUILDINGS (MODULAR OR OTHERWISE), DRAWINGS, SPECIFICATIONS, PRINTS, APPARATUS, OR PARTS THEREOF, EXCEPT AS EXPRESSLY PERMITTED BY WRITTEN CONSENT OF, OR IN A WRITTEN AGREEMENT WITH, AMS. SUBMITTAL OR DISTRIBUTION TO MEET OFFICIAL REGULATORY REQUIREMENTS WILL NOT BE CONSTRUED AS PUBLICATION IN DEROGATION OF AMS'S COPYRIGHT OR OTHER INTELLECTUAL-PROPERTY OR PROPRIETARY RIGHTS.

PRE-CHECKED SET NAME
30' x 32' THRU 60' x 32'
2GO®

SITE SPECIFIC PROJECT NAME
.
.
.

APPROVED
DIV. OF THE STATE ARCHITECT
APP: 04-122041 PC
REVIEWED FOR
SS ☑ FLS ☑ ACS ☑ CG ☑
DATE: 04/05/2024

☐ 2022 CBC PRE-CHECK (PC) DOCUMENT
A SEPARATE PROJECT APPLICATION FOR CONSTRUCTION IS REQUIRED.

MANUFACTURER PROFESSIONAL OF RECORD ON PC

LICENSED ARCHITECT
RANDAL PATRICK CAVANAGH
No. C12631
Ren. 3-31-25
STATE OF CALIFORNIA

THESE DRAWINGS ARE PRELIMINARY AND NOT FOR CONSTRUCTION UNLESS STAMPED & SIGNED BY THE DESIGN PROFESSIONAL OF RECORD.

REVISIONS
1
2
3
4

DRAWN BY:	A.A.
SCALE:	AS NOTED
DATE:	DD/MM/YY
PROJECT NO:	XXXX-XX

SHEET TITLE:
ENERGY CALCULATIONS
30x32 BUILDING - GROUP C

SHEET NUMBER:
EN.6

G4. NONRESIDENTIAL AIR BARRIER

01	02
Building Story Name	Air Barrier
Ground Floor	Air barrier - not verified

G5. OPAQUE SURFACE ASSEMBLY SUMMARY

01	02	03	04	05	06		07	08	09	10
Surface Name	Construction Type	Area (ft²)	Framing Type	Cavity R-Value	Continuous R-Value		Units	Value	Description of Assembly Layers	Status[1]
					Interior	Exterior				
Ext Roof	Roof	960	Metal	19	N/A	5	U-factor	0.0528	Metal Standing Seam - 1/16 in. Compliance Insulation R5.00 Plywood - 1/2 in. Roof Structure Air - Roof - 3 1/2 in. Acoustic Tile - 3/8 in.	N
Ext Wall	Exterior Wall	1,240	Wood	13	N/A	N/A	U-factor	0.0939	Wood siding - 1/2 in. Vapor permeable felt - 1/8 in. R-13 in Wood Studs Gypsum Board - 1/2 in.	N
Floor over Crawlspace	Exterior Floor	960	Metal	19	N/A	N/A	U-factor	0.0523	Vented Crawl Space Floor Metal Frame Plywood - 1/2 in. Carpet - 3/4 in.	N

[1] *Status: N - New, A - Altered, E - Existing*

G6A. OPAQUE DOOR SUMMARY (NONRESIDENTIAL)

01	02	03	04
Assembly Name	Area (ft²)	Overall U-factor	Status[1]
Door	42	0.7	N

[1] *Status: N - New, A - Altered, E - Existing*

G7A. FENESTRATION ASSEMBLY SUMMARY (NONRESIDENTIAL)

01	02	03	04	05	06	07	08	09
Fenestration Assembly Name	Fenestration Type/ Product Type / Frame Type	Certification Method[1]	Assembly Method	Area (ft²)	Overall U-factor	Overall SHGC	Overall VT	Status[2]
Windows	Vertical fenestration Fixed window N/A	NFRC	Manufactured	240	0.42	0.25	0.44	N

[1] *Notes: Newly installed fenestration shall have a certified NFRC Label Certificate or use the CEC default tables found in Table 110.6-A and Table 110.6-B. Center of Glass (COG) values are for the glass-only, determined by the manufacturer, and are shown for ease of verification. Site-built fenestration values are calculated per Nonresidential Appendix NA6 and are used in the analysis.*
[2] *Status: N - New, A - Altered, E - Existing*

H1. DRY SYSTEM EQUIPMENT (FURNACES, AIR HANDLING UNITS, HEAT PUMPS, VRF, ECONOMIZERS ETC.)

01	02	03	04	05	06	07	08	09	10	11	12
Equipment Name	Equipment Type	Qty	Heating				Cooling			Economizer Type (if present)	Status[1]
			Total Heating Output (kBtu/h)	Supp Heat Output (kBtu/h)	Efficiency Unit	Efficiency	Total Cooling Output (kBtu/h)	Efficiency Unit	Efficiency		
FC-1	Single Package VHP Air System	1	39	3.41	COP	3.3	42	EER	11	No Economizer	N

[1] *Status: N - New, A - Altered, E - Existing*

H3. NONRESIDENTIAL / COMMON USE AREA FAN SYSTEMS SUMMARY

01	02	03	04	05	06	07	08	09	10	11	12	13
Name or Item Tag	Qty	Design OA CFM	Supply Fan				Return / Relief Fan					Status[1]
			CFM	Power	Power Units	Control	Fan Type	CFM	Power	Power Units	Control	
FC-1	1	364.8	1,350	0.73	InH2O	Constant Vol	N/A	N/A	N/A	N/A	N/A	N

[1] *Status: N - New, A - Altered, E - Existing*

H8. SYSTEM SPECIAL FEATURES

01	02	03	04
System Name	Equipment Type	Interlocks per 140.4(n)[1]	Other Special Features and Controls
FC-1	Single Package VHP Air System	No	

Notes: This table includes controls related to the performance path only. For projects using the prescriptive path, mandatory and prescriptive controls requirements are documented on the NRCC-MCH-E.
[1] *Yes = interlocks are provided, No = interlocks are not provided, NA means no operable openings.*

H9. NONRESIDENTIAL / COMMON USE AREA & HOTEL/MOTEL VENTILATION

01	02	03	04	05	06	07
Zone Name	Mechanical Ventilation				Conditioned Area (sf)	DCV or Occupant Sensor Controls, or Both
	Ventilation Function	# of People	Supply OA CFM	Exhaust CFM		
Zn FC-1 L01	Education - Classrooms (ages 9-18)	24	364.8	0	960	N/A

H11. ZONAL SYSTEM AND TERMINAL UNIT SUMMARY

01	02	03	04	05	06	07	08	09	10	11	12
System ID	System Type	Qty	Rated Capacity (kBtuh)		Airflow (cfm)			Fan			VSD
			Heating	Cooling	Design	Min.	Min. Ratio	Power	Power Units	Cycles	
FC-1_TRM	Uncontrolled	1	N/A	N/A	1,350	N/A	0	N/A	N/A	N/A	☐

K1. INDOOR CONDITIONED LIGHTING GENERAL INFO

01	02	03	04	05	06
Occupancy Type[1]	Conditioned Floor Area[2] (ft²)	Installed Lighting Power (Watts)	Lighting Control Credits (Watts)	Additional (Custom) Allowance	
				Area Category Footnotes (Watts)	Area Category Footnotes (Watts)
Classroom, Lecture, or Training Vocational	960	405	0	0	0
Building Totals:	**960**	**405**	**0**	**0**	**0**

[1] *See Table 140.6-C*
[2] *See NRCC-LTI--E for unconditioned spaces*
[3] *Lighting information for existing spaces modeled is not included in this table*

K2. INDOOR CONDITIONED LIGHTING SCHEDULE

Luminaire Schedule (includes all permanent installed lighting in conditioned space, and portable lighting over 0.3 w/ft.² in offices)

01	02	03	04	05	06
Name or Item Tag	Complete Luminaire Description (i.e. 3-lamp fluorescent troffer, F32T8, one dimmable electronic ballast)	Installed Watts (Conditioned)			
		Watts per luminaire	How is Wattage determined	Total Number of Luminaires	Installed Watts
2x4 LED	2x4 - LED	45	According to 130.0(c)	9	405

[1] *If lighting power densities were used in the compliance model Building Departments will need to check prescriptive forms for Luminaire Schedule details.*

K3. INDOOR CONDITIONED LIGHTING CONTROL CREDITS

Lighting Control Credits Schedule (includes all lighting controls installed in conditioned space for compliance credit per 140.6(a)2 and Table 140.6-A)

01	02	03	04	05	06	07	08	09
Area Description	Primary Function Area (must meet requirements of Table 140.6-A and 170.2-L)	Type of Lighting Control	Power Adjustment Factor (PAF)	Luminaire Item Tag	Watts per Luminaire	# of Luminaires	Lighting Controlled (Watts)	Control Credit (Watts)
L01 ClassRm 101	Classroom, Lecture, or Training Vocational	N/A	N/A	2x4 LED	45	3	135	0
L01 ClassRm 101	Classroom, Lecture, or Training Vocational	N/A	N/A	2x4 LED	45	2	90	0
L01 ClassRm 101	Classroom, Lecture, or Training Vocational	N/A	N/A	2x4 LED	45	4	180	0
							Lighting Control Credits (Conditioned) Total (Watts)	0

K4. INDOOR CONDITIONED LIGHTING MANDATORY LIGHTING CONTROL

Building Level Controls

01	02
Mandatory Demand Response 110.12(c)	Shut-Off Controls 130.1(c) & 160.5(b)4C

NA	Required				
Area Level Controls (Includes all lighting controls installed in conditioned space to meet mandatory requirements per 130.1)					
03	04	05	06	07	08	09
Area Description	Area Category Primary Function Area	Area Controls 130.1(a) & 160.5(b)4A	Multi-Level Controls 130.1(b) & 160.5(b)4B	Shut-Off Controls 130.1(c) & 160.5(b)4C	Primary Daylighting 130.1(d) & 160.5(b)4D	Secondary Daylighting 140.5(d) & 160.5(b)4D
Classrooms Skylit Zn	Classroom, Lecture, or Training Vocational	Required	NA	Required	Required	Required

L. DECLARATION OF REQUIRED CERTIFICATES OF INSTALLATION

Selections made by Documentation Author indicate which Certificates of Installation must be submitted for the features to be recognized for compliance. These documents must be retained and provided to the building inspector during construction and can be found online

Building Component	Form/Title
Envelope	NRCI-ENV-01-E - Must be submitted for all buildings
Envelope	NRCI-ENV-E - Envelope (for all buildings)
Mechanical	NRCI-MCH-01-E - Must be submitted for all buildings
Mechanical	NRCI-MCH-E - For all buildings with Mechanical Systems
Plumbing	NRCI-PLB-01-E - Must be submitted for all buildings
Indoor Lighting	NRCI-LTI-01-E - Must be submitted for all buildings
Indoor Lighting	NRCI-LTI-E - Indoor Lighting (for all buildings)
Indoor Lighting	NRCI-LTI-02-E- Must be submitted for a lighting control system, or for an Energy Management Control System (EMCS), to be recognized for compliance.

M. DECLARATION OF REQUIRED CERTIFICATES OF ACCEPTANCE

Selections made by Documentation Author indicate which Certificates of Acceptance must be submitted for the features to be recognized for compliance. These documents must be provided to the building inspector during construction and must be completed through an Acceptance Test Technician Certification Provider (ATTCP).

Building Component	Form/Title
Envelope	NRCA-ENV-02-F - NRFC label verification for fenestration
Indoor Lighting	NRCA-LTI-02-A - Occupancy Sensors and Automatic Time Switch Controls.
Indoor Lighting	NRCA-LTI-03-A - Automatic Daylight Controls.
Mechanical	NRCA-MCH-02-A - Outdoor Air must be submitted for all newly installed HVAC units. Note: MCH-02-A can be performed in conjunction with MCH-07-A Supply Fan VFD Acceptance (if applicable) since testing activities overlap

M. DECLARATION OF REQUIRED CERTIFICATES OF ACCEPTANCE

Selections made by Documentation Author indicate which Certificates of Acceptance must be submitted for the features to be recognized for compliance. These documents must be provided to the building inspector during construction and must be completed through an Acceptance Test Technician Certification Provider (ATTCP).

Building Component	Form/Title
Mechanical	NRCA-MCH-03-A - Constant Volume Single Zone HVAC
Mechanical	NRCA-MCH-19-A Occupancy Sensor Controls

N. DECLARATION OF REQUIRED CERTIFICATES OF VERIFICATION

Selections made by Documentation Author indicate which Certificates of Verification must be submitted for the features to be recognized for compliance. These documents must be retained and provided to the building inspector during construction and can be found online

There are no Certificates of Verification applicable to this project

Documentation Author's Declaration Statement

1. I certify that this Certificate of Compliance documentation is accurate and complete.

Documentation Author Name: Hans Marsman, CEA, LEED AP BD+C	Documentation Author Signature:
Company: Marsman Consulting	Signature Date:
Address: 1150 J Street #409	CEA/HERS Certification Identification (if applicable):
City/State/Zip: San Diego, CA 92101	Phone: (619) 573-6374

Digitally signed by Hans Marsman, LEED AP, CEA
Date: 2023.09.19 15:07:47-08'00'

Responsible Person's Declaration statement

I certify the following under penalty of perjury, under the laws of the State of California:
1. The information provided on this Certificate of Compliance is true and correct.
2. I am eligible under Division 3 of the Business and Professions Code to accept responsibility for the building design or system design identified on this Certificate of Compliance (responsible designer)
3. The energy features and performance specifications, materials, components, and manufactured devices for the building design or system design identified on this Certificate of Compliance conform to the requirements of Title 24, Part 1 and Part 6 of the California Code of Regulations.
4. The building design features or system design features identified on this Certificate of Compliance are consistent with the information provided on other applicable compliance documents, worksheets, calculations, plans and specifications submitted to the enforcement agency for approval with this building permit application.
5. I understand that a registered copy of this Certificate of Compliance shall be made available with the building permit(s) issued for the building, and made available to the enforcement agency for all applicable inspections, and I will take the necessary steps to accomplish this requirement.
6. I understand that a registered copy of this Certificate of Compliance is required to be included with the documentation the builder provides to the building owner at occupancy, and I will take the necessary steps to accomplish these requirements.

Responsible Designer Name: Randall P Cavannagh	Responsible Designer Signature:	
Company: American Modular Systems | Gen7 Schools		
Address: 787 Spreckels Avenue	Date Signed: 12/11/2023	
City/State/Zip: Manteca, CA 95336	License #: C12631	
Phone: 209.825.1921	Title: Engineer	Scope: Envelope
Responsible Designer Name: Randall P Cavannagh	Responsible Designer Signature:	
Company: American Modular Systems | Gen7 Schools		
Address: 787 Spreckels Avenue	Date Signed: 12/11/2023	
City/State/Zip: Manteca, CA 95336	License #: C12631	
Phone: 209.825.1921	Title: Engineer	Scope: Mechanical

Responsible Designer Name: Randall P Cavannagh	Responsible Designer Signature:	
Company: American Modular Systems | Gen7 Schools		
Address: 787 Spreckels Avenue	Date Signed: 12/11/2023	
City/State/Zip: Manteca, CA 95336	License #: C12631	
Phone: 209.825.1921	Title: Engineer	Scope: Lighting

IDENTIFICATION STAMP
DIV. OF THE STATE ARCHITECT
APP: 02-122533 INC:
REVIEWED FOR
SS ☑ FLS ☑ ACS ☑
DATE: 05/22/2024

AMS
American Modular Systems
787 Spreckels Ave., Manteca, CA 95336
Phone (209) 825-1921 Fax (209) 825-7018
www.americanmodular.com

INTELLECTUAL-PROPERTY & PROPRIETARY RIGHTS STATEMENT
COPYRIGHT © AMERICAN MODULAR SYSTEMS (AMS)
AMS OWNS ALL COPYRIGHT AND OTHER INTELLECTUAL-PROPERTY AND PROPRIETARY RIGHTS IN THESE DRAWINGS, SPECIFICATIONS, AND THE MATERIAL CONTAINED HEREIN. CERTAIN ELEMENTS SHOWN IN THESE DOCUMENTS ARE REGISTERED TRADEMARKS OF AMS. ALL PATENTABLE MATERIALS CONTAINED IN THESE DOCUMENTS AND ORIGINATING WITH AMS WILL REMAIN THE SOLE PROPERTY OF AMS. THESE DRAWING, SPECIFICATIONS AND THE MATERIAL CONTAINED HEREIN MAY NOT BE REPRODUCED, TRANSMITTED, COPIED, DISTRIBUTED, MODIFIED, OR OTHERWISE DISPOSED OF (DIRECTLY OR INDIRECTLY) AND MAY NOT BE USED (IN WHOLE OR IN PART) TO ASSIST IN THE CONSTRUCTION, DESIGN, OR OTHER MAKING OF, OR FOR THE PURPOSE OF FURNISHING ANY INFORMATION FOR THE CONSTRUCTION, DESIGN, OR OTHER MAKING OF, ANY BUILDINGS (MODULAR OR OTHERWISE), DRAWINGS, SPECIFICATIONS, PRINTS, APPARATUS, OR PARTS THEREOF, EXCEPT AS EXPRESSLY PERMITTED BY WRITTEN CONSENT OF, OR IN A WRITTEN AGREEMENT WITH, AMS. SUBMITTAL OR DISTRIBUTION TO MEET OFFICIAL REGULATORY REQUIREMENTS WILL NOT BE CONSTRUED AS PUBLICATION IN DEROGATION OF AMS'S COPYRIGHT OR OTHER INTELLECTUAL-PROPERTY OR PROPRIETARY RIGHTS.

PRE-CHECKED SET NAME
30' x 32' THRU 60' x 32'
2GO

SITE SPECIFIC PROJECT NAME
.
.
.

APPROVED
DIV. OF THE STATE ARCHITECT
APP: 04-122041 PC
REVIEWED FOR
SS ☑ FLS ☑ ACS ☑ CG ☑
DATE: 04/05/2024

☐ 2022 CBC PRE-CHECK (PC) DOCUMENT
A SEPARATE PROJECT APPLICATION FOR CONSTRUCTION IS REQUIRED

MANUFACTURER PROFESSIONAL OF RECORD ON PC

LICENSED ARCHITECT
RANDALL PATRICK CAVANAGH
No. C12631
Ren. 3-31-25
STATE OF CALIFORNIA

THESE DRAWINGS ARE PRELIMINARY AND NOT FOR CONSTRUCTION UNLESS STAMPED & SIGNED BY THE DESIGN PROFESSIONAL OF RECORD.

REVISIONS
1
2
3
4

DRAWN BY:	A.A.
SCALE:	AS NOTED
DATE:	DD/MM/YY
PROJECT NO:	XXXX-XX

SHEET TITLE:
ENERGY CALCULATIONS
30x32 BUILDING - GROUP C

SHEET NUMBER:
EN.7

STATE OF CALIFORNIA
Indoor Lighting
CALIFORNIA ENERGY COMMISSION

CERTIFICATE OF COMPLIANCE — **NRCC-LTI-E**

This document is used to demonstrate compliance with requirements in 110.9, 110.12(c), 130.0, 130.1, 140.6 and 141.0(b)2 for indoor lighting scopes using the prescriptive path for nonresidential and hotel/motel occupancies. It is also used to document compliance with requirements in 160.5, 170.2(e) and 180.2(b)4 for indoor lighting scopes using the prescriptive path for multifamily occupancies. Multifamily includes dormitory and senior living facilities.

Project Name:	AMS PC 30x32 UC Ltg - T24-22	**Report Page:**	**(Page 1 of 7)**
Project Address:		**Date Prepared:**	2023-07-11T21:15:13-04:00

A. GENERAL INFORMATION

01	Project Location (city)	Palmdale	04 Total Conditioned Floor Area (ft^2)	0
02	Climate Zone	14	05 Total Unconditioned Floor Area (ft^2)	285
03	Occupancy Types Within Project (select all that apply):		06 # of Stories (Habitable Above Grade)	1

● Classroom

B. PROJECT SCOPE

This table includes any lighting systems that are within the scope of the permit application and are demonstrating compliance using the prescriptive path outlined in 140.6 / 170.2(e) or 141.0(b)2 / 180.2(b)4 for alterations.

Scope of Work	Conditioned Spaces		Unconditioned Spaces	
01	02	03	04	05
My Project Consists of (check all that apply):	Calculation Method	Area (ft^2)	Calculation Method	Area (ft^2)
☒ New Lighting System	N/A	0	Area Category Method	285
☐ New Lighting System - Parking Garage	N/A	0	N/A	0
Total Area of Work (ft^2)			285	

STATE OF CALIFORNIA
Indoor Lighting
CALIFORNIA ENERGY COMMISSION

CERTIFICATE OF COMPLIANCE — **NRCC-LTI-E**

Project Name:	AMS PC 30x32 UC Ltg - T24-22	**Report Page:**	**(Page 2 of 7)**
		Date Prepared:	2023-07-11T21:15:13-04:00

C. COMPLIANCE RESULTS

If any cell on this table says "DOES NOT COMPLY" or "COMPLIES with Exceptional Conditions" refer to Table D. for guidance.

Lighting in conditioned and unconditioned spaces must not be combined for compliance per 140.6(b)1 / 170.2(e)	Allowed Lighting Power per 140.6(b) / 170.2(e) (Watts)						Adjusted Lighting Power per 140.6(a) / 170.2(e) (Watts)				Compliance Results
	01	02	03	04		05	06	07		08	09
	Complete Building 140.6(c)1	Area Category 140.6(c)2 / 170.2(e)4	Area Category Additional 140.6(c)2G / 170.2(e)4Av (+)	Tailored 140.6(c)3 / 170.2(e)4B (+)	=	**Total Allowed** (Watts)	Total Designed (Watts)	Adjustments PAF Lighting Control Credits 140.6(a)2 / 170.2(e)1B (-)	=	**Total Adjusted** (Watts) *Includes Adjustments	**05 must be >= 08 140.6 / 170.2(e)**
	(See Table I)	(See Table I)	(See Table J)	(See Table K)			(See Table F)	(See Table P)			
Conditioned					=				=		
Unconditioned		234			=	234	180		=	180	COMPLIES
Controls Compliance (See Table H for Details)											COMPLIES
Rated Power Reduction Compliance (See Table Q for Details)											

D. EXCEPTIONAL CONDITIONS

This table is auto-filled with uneditable comments because of selections made or data entered in tables throughout the form.

E. ADDITIONAL REMARKS

This table includes remarks made by the permit applicant to the Authority Having Jurisdiction.

STATE OF CALIFORNIA
Indoor Lighting
CALIFORNIA ENERGY COMMISSION

CERTIFICATE OF COMPLIANCE — **NRCC-LTI-E**

Project Name:	AMS PC 30x32 UC Ltg - T24-22	**Report Page:**	**(Page 3 of 7)**
		Date Prepared:	2023-07-11T21:15:13-04:00

F. INDOOR LIGHTING FIXTURE SCHEDULE

This table includes all planned permanent and portable lighting other than dwelling unit/ hotel/ motel room lighting. Multifamily dwelling unit and hotel/motel room lighting is documented in Table T. If using Table T to document lighting in multifamily common use areas providing shared provisions for living, eating, cooking or sanitation, those luminaires are not included here.

Designed Wattage: Unconditioned Spaces

01	02	03	04	05	06	07	08	09	10	
Name or Item Tag	Complete Luminaire Description	Modular (Track) Fixture	Small Aperture & Color Change[1]	Watts per luminaire[2]	How is Wattage determined	Total Number of Luminaires	Excluded per 140.6(a)3 / 170.2(e)2C	Design Watts	Field Inspector: Pass	Field Inspector: Fail
2x4 LED	2x4 LED	No	NA	45	Mfr. Spec	4	No	180	☐	☐
Total Designed Watts: UNCONDITIONED SPACES								180		

[1]FOOTNOTE: Design Watts for small aperture and color changing luminaires which qualify per 140.6(a)4B / 170.2(e)2D is adjusted to be 75% /80% of their rated wattage. Table F automatically makes this adjustment, the permit applicant should enter full rated wattage in column 05.

[2]Authority Having Jurisdiction may ask for Luminaire cut sheets to confirm wattage used for compliance per 130.0(c) / 160.5(b). Wattage used must be the maximum rated for the luminaire, not the lamp.

G. MODULAR LIGHTING SYSTEMS

This section does not apply to this project.

H. INDOOR LIGHTING CONTROLS (Not including PAFs)

This table includes lighting controls for conditioned and unconditioned spaces.

Building Level Controls

01	02	03	
		Field Inspector: Pass	Field Inspector: Fail
Mandatory Demand Response 110.12(c)	Shut-off controls 130.1(c) / 160.5(b)4C	☐	☐
NA < 4,000W subject to multilevel	See Area/Space Level Controls		

STATE OF CALIFORNIA
Indoor Lighting
CALIFORNIA ENERGY COMMISSION

CERTIFICATE OF COMPLIANCE — **NRCC-LTI-E**

Project Name:	AMS PC 30x32 UC Ltg - T24-22	**Report Page:**	**(Page 4 of 7)**
		Date Prepared:	2023-07-11T21:15:13-04:00

H. INDOOR LIGHTING CONTROLS (Not including PAFs)

Area Level Controls

04	05	06	07	08	09	10	11	12	
Area Description	Complete Building or Area Category Primary Function Area	Manual Area Controls 130.1(a) / 160.5(b)4A	Multi-Level Controls 130.1(b) / 160.5(b)4B	Shut-Off Controls 130.1(c) // 160.5(b)4C	Primary/Skylit Daylighting 130.1(d) / 160.5(b)4D	Secondary Daylighting 130.1(d) / 160.5(b)4D	Interlocked Systems 140.6(a)1/ 170.2(e)2A	Field Inspector: Pass	Field Inspector: Fail
All Restroom	Restroom	Readily Accessible	NA: Restrooms	Occupancy Sensor	NA: Not daylit zone	NA: Not daylit zone	No	☐	☐
					13				
					Plan Sheet Showing Daylit Zones:				

I. LIGHTING POWER ALLOWANCE: COMPLETE BUILDING OR AREA CATEGORY METHODS

Each area complying using the Complete Building or Area Category Methods per 140.6(b) are included in this table. Column 06 indicates if additional lighting power allowances per 140.6(c) or adjustments per 140.6(a) are being used .

Unconditioned Spaces

01	02	03	04	05	06	
Area Description	Complete Building or Area Category Primary Function Area	Allowed Density (W/ft^2)	Area (ft^2)	Allowed Wattage (Watts)	Additional Allowance / Adjustment: Area Category	Additional Allowance / Adjustment: PAF
All Restroom	Restroom	0.65	360	234	No	No
		TOTALS:	360	234	See Tables J, or P for detail	

J. ADDITIONAL ALLOWANCE: AREA CATEGORY METHOD QUALIFYING LIGHTING SYSTEM

This section does not apply to this project.

STATE OF CALIFORNIA
Indoor Lighting
CALIFORNIA ENERGY COMMISSION

CERTIFICATE OF COMPLIANCE — **NRCC-LTI-E**

Project Name:	AMS PC 30x32 UC Ltg - T24-22	**Report Page:**	**(Page 5 of 7)**
		Date Prepared:	2023-07-11T21:15:13-04:00

K. TAILORED METHOD GENERAL LIGHTING POWER ALLOWANCE

This section does not apply to this project.

L. ADDITIONAL LIGHTING ALLOWANCE: TAILORED WALL DISPLAY

This section does not apply to this project.

M. ADDITIONAL LIGHTING ALLOWANCE: TAILORED FLOOR AND TASK LIGHTING

This section does not apply to this project.

N. ADDITIONAL LIGHTING ALLOWANCE: TAILORED DECORATIVE /SPECIAL EFFECTS

This section does not apply to this project.

O. ADDITIONAL LIGHTING ALLOWANCE: TAILORED VERY VALUABLE MERCHANDISE

This section does not apply to this project.

P. POWER ADJUSTMENT: LIGHTING CONTROL CREDIT (POWER ADJUSTMENT FACTOR (PAF))

This section does not apply to this project.

Q. RATED POWER REDUCTION COMPLIANCE FOR ONE-FOR-ONE ALTERATIONS

This section does not apply to this project.

R. 80% LIGHTING POWER FOR ALL ALTERATIONS - CONTROLS EXCEPTIONS

This section does not apply to this project.

STATE OF CALIFORNIA
Indoor Lighting
CALIFORNIA ENERGY COMMISSION

CERTIFICATE OF COMPLIANCE — **NRCC-LTI-E**

Project Name:	AMS PC 30x32 UC Ltg - T24-22	**Report Page:**	**(Page 6 of 7)**
		Date Prepared:	2023-07-11T21:15:13-04:00

S. DAYLIGHT DESIGN POWER ADJUSTMENT FACTOR (PAF)

This section does not apply to this project.

T. DWELLING UNIT LIGHTING

This section does not apply to this project.

U. DECLARATION OF REQUIRED CERTIFICATES OF INSTALLATION

Selections have been made based on information provided in this document. If any selections have been changed by permit applicant, an explanation should be included in Table E. Additional Remarks. These documents must be provided to the building inspector during construction and can be found online

Form/Title
NRCI-LTI-E - Must be submitted for all buildings

V. DECLARATION OF REQUIRED CERTIFICATES OF ACCEPTANCE

Selections have been made based on information provided in this document. If any selections have been changed by the permit applicant, an explanation should be included in Table E. Additional Remarks. These documents must be provided to the building inspector during construction and any with "-A" in the form name must be completed through an Acceptance Test Technician Certification Provider (ATTCP). For more information visit: http://www.energy.ca.gov/title24/attcp/providers.html

Form/Title	Systems/Spaces To Be Field Verified
NRCA-LTI-02-A - Must be submitted for occupancy sensors and automatic time switch controls.	All Restroom

STATE OF CALIFORNIA
Indoor Lighting
CALIFORNIA ENERGY COMMISSION

CERTIFICATE OF COMPLIANCE — **NRCC-LTI-E**

Project Name:	AMS PC 30x32 UC Ltg - T24-22	**Report Page:**	**(Page 7 of 7)**
Project Address:		**Date Prepared:**	2023-07-11T21:15:13-04:00

DOCUMENTATION AUTHOR'S DECLARATION STATEMENT

I certify that this Certificate of Compliance documentation is accurate and complete.

Documentation Author Name:	Hans Marsman	Documentation Author Signature:	
Company:	Marsman Consulting	Signature Date:	
Address:	1150 J Street #409	CEA/ HERS Certification Identification (if applicable):	
City/State/Zip:	San Diego, CA 92101	Phone:	(619) 573-6374

Digitally signed by Hans Marsman, LEED AP, CEA
Date: 2023.07.11 15:07:47 -06'00'

RESPONSIBLE PERSON'S DECLARATION STATEMENT

I certify the following under penalty of perjury, under the laws of the State of California:

1. The information provided on this Certificate of Compliance is true and correct.
2. I am eligible under Division 3 of the Business and Professions Code to accept responsibility for the building design or system design identified on this Certificate of Compliance (responsible designer)
3. The energy features and performance specifications, materials, components, and manufactured devices for the building design or system design identified on this Certificate of Compliance conform to the requirements of Title 24, Part 1 and Part 6 of the California Code of Regulations.
4. The building design features or system design features identified on this Certificate of Compliance are consistent with the information provided on other applicable compliance documents, worksheets, calculations, plans and specifications submitted to the enforcement agency for approval with this building permit application.
5. I will ensure that a completed signed copy of this Certificate of Compliance shall be made available with the building permit(s) issued for the building, and made available to the enforcement agency for all applicable inspections. I understand that a completed signed copy of this Certificate of Compliance is required to be included with the documentation the builder provides to the building owner at occupancy.

Responsible Designer Name:	Randall P Cavannagh	Responsible Designer Signature:	
Company:	American Modular Systems | Gen7 Schools	Date Signed:	07/12/2023
Address:	787 Spreckels Avenue	License:	C12631
City/State/Zip:	Manteca, CA 95336	Phone:	209.825.1921

STATE OF CALIFORNIA
Outdoor Lighting
CALIFORNIA ENERGY COMMISSION

CERTIFICATE OF COMPLIANCE — **NRCC-LTO-E**

This document is used to demonstrate compliance with requirements in 110.9, 130.0, 130.2, 140.7, and 141.0(b)2L for outdoor lighting scopes using the prescriptive path for nonresidential and hotel/motel occupancies. It is also used to document compliance with requirements in 160.5, 170.2(e)6, 180.1(a) and 180.2(b)4Bv for outdoor lighting scopes using the prescriptive path for multifamily and mixed-use occupancies. Multifamily includes dormitory and senior living facilities.

Project Name:	AMS PCs Ext Ltg - T24-22	**Report Page:**	**(Page 1 of 7)**
Project Address:		**Date Prepared:**	2023-03-06T10:40:21-05:00

A. GENERAL INFORMATION

01	Project Location (city)	Palmdale	04 Total Illuminated Hardscape Area (ft^2)	0
02	Climate Zone	14		

03 Outdoor Lighting Zone per Title 24 Part 1 10.114 or as designated by Authority Having Jurisdiction (AHJ):

☐ LZ-0: Very Low - Undeveloped Parkland ☐ LZ-2: Moderate - Urban Clusters ☐ LZ-4: High - Must be reviewed by CA Energy Commission for Approval
☐ LZ-1: Low - Rural Areas ☒ LZ-3: Moderately High - Urban Areas

05 Occupancy Types within Project

● Classroom

B. PROJECT SCOPE

This table includes outdoor lighting systems that are within the scope of the permit application and are demonstrating compliance using the prescriptive path outlined in 140.7 / 170.2(e)6 or 141.0(b)2L / 180.2(b)4Bv for alterations.

My Project Consists of:

01	02	
☒ New Lighting System	Must Comply with Allowances from 140.7 / 170.2(e)6	
☐ Altered Lighting System	Is your alteration increasing the connected lighting load (Watts)?	○ Yes ○ No
03	04	05
% of Existing Luminaires Being Altered[1]	Sum Total of Luminaires Being Added or Altered	Calculation Method
☐ < 10% ☐ >= 10% and < 50% ☐ >= 50%		

Please proceed to Table F. Outdoor Lighting Fixture Schedule to define the project's luminaires.

[1] FOOTNOTES: % of Existing Luminaires Being Altered = (Sum Total of Luminaires Being Added or Altered / Existing Luminaires within the Scope of the Permit Application) x 100.

STATE OF CALIFORNIA
Outdoor Lighting
CALIFORNIA ENERGY COMMISSION

CERTIFICATE OF COMPLIANCE — **NRCC-LTO-E**

Project Name:	AMS PCs Ext Ltg - T24-22	**Report Page:**	**(Page 2 of 7)**
		Date Prepared:	2023-03-06T10:40:21-05:00

C. COMPLIANCE RESULTS

Results in this table are automatically calculated from data input and calculations in Tables F through N. Note: If any cell on this table says "COMPLIES with Exceptional Conditions" refer to Table D. Exceptional Conditions for guidance or see applicable Table referenced below.

Calculations of Total Allowed Lighting Power (Watts) 140.7 / 170.2(e)6 or 141.0(b)2L / 180.2(b)4Bv										Compliance Results			
01		02		03		04		05		06		07	08	09
General Hardscape Allowance 140.7(d)1 / 170.2(e)6 (See Table I)	+	Per Application 140.7(d)2 / 170.2(e)6 (See Table J)	+	Sales Frontage 140.7(d)2 (See Table K)	+	Ornamental 140.7(d)2 / 170.2(e)6 (See Table L)	+	Per Specific Area 140.7(d)2 / 170.2(e)6 (See Table M)	OR	Existing Power Allowance 141.0(b)2L / 180.2(b)4Bv (See Table N)	=	**Total Allowed** (Watts)	≥	**Total Actual** (Watts)	**07 must be >= 08**
0	+	17	+	---	+	---	+	---	OR	---	=	17	≥	17	COMPLIES
Shielding Compliance (See Table G for Details)															N/A
Controls Compliance (See Table H for Details)															COMPLIES

D. EXCEPTIONAL CONDITIONS

This table is auto-filled with uneditable comments because of selections made or data entered in tables throughout the form.

E. ADDITIONAL REMARKS

This table includes remarks made by the permit applicant to the Authority Having Jurisdiction.

IDENTIFICATION STAMP
DIV. OF THE STATE ARCHITECT
APP: 02-122533 INC:
REVIEWED FOR
SS ☑ FLS ☑ ACS ☑
DATE: 05/22/2024

AMS®
American Modular Systems
787 Spreckels Ave., Manteca, CA 95336
Phone (209) 825-1921 Fax (209) 825-7018
www.americanmodular.com

INTELLECTUAL-PROPERTY & PROPRIETARY RIGHTS STATEMENT
COPYRIGHT © AMERICAN MODULAR SYSTEMS (AMS)
AMS OWNS ALL COPYRIGHT AND OTHER INTELLECTUAL-PROPERTY AND PROPRIETARY RIGHTS IN THESE DRAWINGS, SPECIFICATIONS, AND THE MATERIAL CONTAINED HEREIN. CERTAIN ELEMENTS SHOWN IN THESE DOCUMENTS ARE REGISTERED TRADEMARKS OF AMS. ALL PATENTABLE MATERIALS CONTAINED IN THESE DOCUMENTS AND ORIGINATING WITH AMS WILL REMAIN THE SOLE PROPERTY OF AMS. THESE DRAWING, SPECIFICATIONS AND THE MATERIAL CONTAINED HEREIN MAY NOT BE REPRODUCED, TRANSMITTED, COPIED, DISTRIBUTED, MODIFIED, OR OTHERWISE DISPOSED OF (DIRECTLY OR INDIRECTLY) AND MAY NOT BE USED (IN WHOLE OR IN PART) TO ASSIST IN THE CONSTRUCTION, DESIGN, OR OTHER MAKING OF, OR FOR THE PURPOSE OF FURNISHING ANY INFORMATION FOR THE CONSTRUCTION, DESIGN, OR OTHER MAKING OF, ANY BUILDINGS (MODULAR OR OTHERWISE), DRAWINGS, SPECIFICATIONS, PRINTS, APPARATUS, OR PARTS THEREOF, EXCEPT AS EXPRESSLY PERMITTED BY WRITTEN CONSENT OF, OR IN A WRITTEN AGREEMENT WITH, AMS. SUBMITTAL OR DISTRIBUTION TO MEET OFFICIAL REGULATORY REQUIREMENTS WILL NOT BE CONSTRUED AS PUBLICATION IN DEROGATION OF AMS'S COPYRIGHT OR OTHER INTELLECTUAL-PROPERTY OR PROPRIETARY RIGHTS.

PRE-CHECKED SET NAME
30' x 32' THRU 60' x 32'
2GO®

SITE SPECIFIC PROJECT NAME
.
.
.

APPROVED
DIV. OF THE STATE ARCHITECT
APP: 04-122041 PC
REVIEWED FOR
SS ☑ FLS ☑ ACS ☑ CG ☑
DATE: 04/05/2024

☐ **2022 CBC PRE-CHECK (PC) DOCUMENT**
A SEPARATE PROJECT APPLICATION FOR CONSTRUCTION IS REQUIRED

MANUFACTURER PROFESSIONAL OF RECORD ON PC

LICENSED ARCHITECT
RANDALL PATRICK CAVANNAGH
No. C12631
Ren. 3-31-25
STATE OF CALIFORNIA

THESE DRAWINGS ARE PRELIMINARY AND NOT FOR CONSTRUCTION UNLESS STAMPED & SIGNED BY THE DESIGN PROFESSIONAL OF RECORD.

REVISIONS
1
2
3
4

DRAWN BY:	A.A.
SCALE:	AS NOTED
DATE:	DD/MM/YY
PROJECT NO:	XXXX-XX

SHEET TITLE:
ENERGY CALCULATIONS - SUPPLEMENTAL SHEETS

SHEET NUMBER:
EN.35

STATE OF CALIFORNIA
Outdoor Lighting
CALIFORNIA ENERGY COMMISSION

CERTIFICATE OF COMPLIANCE		NRCC-LTO-E
Project Name: AMS PCs Ext Ltg - T24-22	Report Page:	(Page 3 of 7)
	Date Prepared:	2023-03-06T10:40:21-05:00

F. OUTDOOR LIGHTING FIXTURE SCHEDULE

For new or altered lighting systems demonstrating compliance with 140.7 / 170.2(e)6 all new luminaires being installed and any existing luminaires remaining or being moved within the spaces covered by the permit application are included in the Table below. For altered lighting systems using the Existing Power method per 141.0(b)2L only new luminaires being installed and refaceament luminaires being installed as part of the project scope are included (ie, existing luminaires remaining or existing luminaires being moved are not included). Outdoor lighting attached to multifamily buildings and controlled from the inside of a dwelling unit are included in Table H. and are not included here. All other multifamily outdoor lighting is included here.

Designed Wattage:

01	02		03	04	05	06	07	08	09	10	
Name or Item Tag	Complete Luminaire Description		Watts per luminaire[1, 2]	How is Wattage determined	Total Number Luminaires[2]	Luminaire Status[3]	Excluded per 140.7(a) / 170.2(e)6A	Design Watts	Cutoff Req. > 6,200 initial lumen output	Field Inspector	
									130.2(b) / 160.5(c)1[4]	Pass	Fail
Ext Ltg Fixture @ Door	Lihtonia ARC LED	☐ Linear	17	Mfr. Spec	1	New	☐	17	NA: < 6200 lumens	☐	☐
							Total Design Watts:	17			

* NOTES: Selections with a * require a note in the space below explaining how compliance is achieved.
EX: Luminaire is lighting a statue; EXCEPTION 2 to 130.2(b)

[1] *FOOTNOTES: Authority Having Jurisdiction may ask for Luminaire cut sheets to confirm wattage used for compliance per 130.0(c) / 160.5(b)*
[2] *For linear luminaires, wattage should be indicated as W/lf instead of Watts/luminaire. Total linear feet should be indicated in column 05 instead of number of luminaires.*
[3] *Select "New" for new luminaires in a new outdoor lighting project, or for added luminaires in an alteration. Select "Altered" for replacement luminaires in an alteration. Select "Existing to Remain" for existing luminaires within the project scope that are not being altered and are remaining. Select "Existing Reinstalled" for existing luminaires which are being removed and reinstalled as part of the project scope.*
[4] *Compliance with mandatory shielding requirements is required for luminaires with initial lumen output >= 6,200 unless exempted by 130.2(b)/ 160.5(c)*

G. SHIELDING REQUIREMENTS (BUG)

This section does not apply to this project.

STATE OF CALIFORNIA
Outdoor Lighting
CALIFORNIA ENERGY COMMISSION

CERTIFICATE OF COMPLIANCE		NRCC-LTO-E
Project Name: AMS PCs Ext Ltg - T24-22	Report Page:	(Page 4 of 7)
	Date Prepared:	2023-03-06T10:40:21-05:00

H. OUTDOOR LIGHTING CONTROLS

This table demonstrates compliance with controls requirements for all new or altered luminaires installed as part of the permit application. For alteration projects, luminaires which are existing to remain (ie untouched) and luminaires which are removed and reinstalled (wiring only) do not need to be included in this table even if they are within the spaces covered by the permit application.
Outdoor lighting for nonresidential buildings, parking garages and common service areas in multifamily buildings must be documented separately from outdoor lighting attached to multifamily buildings and controlled from the inside of a dwelling unit

Mandatory Controls for Nonresidential Occupancies, Parking Garages & Common Areas in Multifamily Buildings

01	02	03	04	05	
Area Description	Shut-Off 130.2(c)1 / 160.5(c)	Auto-Schedule 130.2(c)2 / 160.5(c)	Motion Sensor 130.2(c)3 / 160.5(c)	Field Inspector	
				Pass	Fail
Entry Door(s): "Ext Ltg Fixture @ Door"	Astronomical Timer	Provided	Provided	☐	☐

[1] *FOOTNOTE: Text has been abbreviated, please refer to Table 160.5-A to confirm compliance with the specific light source technologies listed.*
[2] *Authority having jurisdiction may ask for cutsheets or other documentation to confirm compliance of light source.*
[3] *Recessed luminaires marked for use in fire-rated installations, and recessed luminaires installed in non-insulated ceilings are excepted from ii and iii.*

I. LIGHTING POWER ALLOWANCE (per 140.7 / 170.2(e))

This table includes areas using allowance calculations per 140.7 / 170.2(e). General Hardscape Allowance is per Table 140.7-A/Table 170.2-R while "Use it or lose it" Allowances are per Table 140.7-B /Table 170.2-S. Indicate which allowances are being used to expand sections for user input. Luminaires that qualify for one of the "Use it or lose it" allowances shall not qualify for another "Use it or lose it" allowance.
Outdoor lighting attached to multifamily buildings and controlled from the inside of a dwelling unit are included in Table H. and are not included here. All other multifamily outdoor lighting is included here.

01				
	"Use it or lose it" Allowance (select all that apply) (select all that apply)			
☐ General Hardscape Allowance Table I (below)	☒ Per Application Table J	☐ Sales Frontage Table K	☐ Ornamental Table L	☐ Per Specific Area Table M

STATE OF CALIFORNIA
Outdoor Lighting
CALIFORNIA ENERGY COMMISSION

CERTIFICATE OF COMPLIANCE		NRCC-LTO-E
Project Name: AMS PCs Ext Ltg - T24-22	Report Page:	(Page 5 of 7)
	Date Prepared:	2023-03-06T10:40:21-05:00

J. LIGHTING ALLOWANCE: PER APPLICATION

This table includes areas using the wattage allowance per application from Table 140.7-B / Table 170.2-S.

01	02	03	04	05	06	07	08	09	10
		CALCULATED ALLOWANCE (Watts)			DESIGN WATTS				
Area Description	Application per Table 140.7-B[1]	# of Locations	Allowance per Location[2]	Extra Allowance (Watts)	Luminaire Name or Item Tag	Watts per Luminaire	# of Luminaires	Design Watts	Additional Allowance (Watts)
Entry Door(s)	Building Entrance/Exit	1	19	19	Ext Ltg Fixture @ Door	17	1	17	17
							Total Design Watts for this Area:	17	
							Total Allowance (Watts) All Areas:	17	

[1] *FOOTNOTES: Primary entrance applications are only available for senior care facilities, healthcare facilities, police stations, hospitals, fire stations, and emergency vehicle facilities.*
[2] *The Allowance per Location for ATMs is 100W for the first ATM and 35W for each additional per Table 140.7-B /Table 170.2-S.*
[3] *For luminaires indicated in Table F as linear, wattage in column 07 is W/lf instead of Watts/luminaire. Total linear feet should be indicated in column 08 instead of number of luminaires.*

K. LIGHTING ALLOWANCE: SALES FRONTAGE

This section does not apply to this project.

L. LIGHTING ALLOWANCE: ORNAMENTAL

This section does not apply to this project.

M. LIGHTING ALLOWANCE: PER SPECIFIC AREA

This section does not apply to this project.

N. EXISTING CONDITIONS POWER ALLOWANCE (alterations only)

This section does not apply to this project.

STATE OF CALIFORNIA
Outdoor Lighting
CALIFORNIA ENERGY COMMISSION

CERTIFICATE OF COMPLIANCE		NRCC-LTO-E
Project Name: AMS PCs Ext Ltg - T24-22	Report Page:	(Page 6 of 7)
	Date Prepared:	2023-03-06T10:40:21-05:00

O. DECLARATION OF REQUIRED CERTIFICATES OF INSTALLATION

Form/Title
NRCI-LTO-E - Must be submitted for all buildings

P. DECLARATION OF REQUIRED CERTIFICATES OF ACCEPTANCE

Form/Title	Systems/Spaces To Be Field Verified
NRCA-LTO-02-A - Must be submitted for all outdoor lighting controls except for alterations where controls are added to <= 20 luminaires.	Entry Door(s): "Ext Ltg Fixture @ Door"

STATE OF CALIFORNIA
Outdoor Lighting
CALIFORNIA ENERGY COMMISSION

CERTIFICATE OF COMPLIANCE		NRCC-LTO-E
Project Name: AMS PCs Ext Ltg - T24-22	Report Page:	(Page 7 of 7)
Project Address:	Date Prepared:	2023-03-06T10:40:21-05:00

DOCUMENTATION AUTHOR'S DECLARATION STATEMENT

I certify that this Certificate of Compliance documentation is accurate and complete.

Documentation Author Name: Hans Marsman		Documentation Author Signature:	
Company:	Marsman Consulting	Signature Date:	
Address:	1150 J Street #409	CEA/ HERS Certification Identification (if applicable):	
City/State/Zip:	San Diego, CA 92101	Phone:	(619) 573-6374

Digitally signed by Hans Marsman, LEED AP, CEA
Date: 2023.03.06 09:51:37-06'00'

RESPONSIBLE PERSON'S DECLARATION STATEMENT

I certify the following under penalty of perjury, under the laws of the State of California:
1. The information provided on this Certificate of Compliance is true and correct.
2. I am eligible under Division 3 of the Business and Professions Code to accept responsibility for the building design or system design identified on this Certificate of Compliance (responsible designer)
3. The energy features and performance specifications, materials, components, and manufactured devices for the building design or system design identified on this Certificate of Compliance conform to the requirements of Title 24, Part 1 and Part 6 of the California Code of Regulations.
4. The building design features or system design features identified on this Certificate of Compliance are consistent with the information provided on other applicable compliance documents, worksheets, calculations, plans and specifications submitted to the enforcement agency for approval with this building permit application.
5. I will ensure that a completed signed copy of this Certificate of Compliance shall be made available with the building permit(s) issued for the building, and made available to the enforcement agency for all applicable inspections. I understand that a completed signed copy of this Certificate of Compliance is required to be included with the documentation the builder provides to the building owner at occupancy.

Responsible Designer Name:	Randall P Cavannagh	Responsible Designer Signature:	
Company:	American Modular Systems | Gen7 Schools	Date Signed:	03/04/2023
Address:	787 Spreckels Avenue	License:	C12631
City/State/Zip:	Manteca, CA 95336	Phone:	209.825.1921

STATE OF CALIFORNIA
Domestic Water Heating System
CALIFORNIA ENERGY COMMISSION

CERTIFICATE OF COMPLIANCE		NRCC-PLB-E
Project Name: AMS PCs Water Heating - T24-22	Report Page:	(Page 1 of 6)
Project Address:	Date Prepared:	2023-03-06T10:41:54-05:00

This document is used to demonstrate compliance for nonresidential occupancies with requirements in 110.1, 110.3, 120.3, and 140.5, and with requirements in 141.0 for additions and alterations, for domestic water heating scopes using the prescriptive path. For high-rise residential and hotel/motel occupancies compliance is demonstrated with requirements in 110.1, 110.3, 160.4 and 170.2(d), and with requirements 180.1 for additions and 180.2 for alterations.

A. GENERAL INFORMATION

01	Project Location (city)	Palmdale	02	Climate Zone	14
03	Occupancy Types Within Project (select all that apply):				

● Classroom

B. PROJECT SCOPE

This table includes domestic water heating systems that are within the scope of the permit application and are demonstrating compliance using the prescriptive paths outlined in 140./ 170.2(d) and 141.0(a)/ 180.1, or 141.0(b)2N / 180.2 for additions or alterations. Solar water heating systems are documented on the NRCC-SAB compliance document. Combined hydronic water heating systems are documented on the NRCC-MCH compliance document.

01	02	03		
My project consists of (check all that apply):	System Type[1,2]	System Components		
☒ New system (DHW system being installed for the first time in newly constructed building)	Individual System (serving nonresidential spaces)	☒ Equipment	☒ Distribution	☒ Controls
☐ System Alteration (equipment, distribution or controls)		☐ Equipment	☐ Distribution	☐ Controls

[1] *FOOTNOTES: Point of use water heaters, or other non-central systems used to serve nonresidential spaces, are considered individual systems.*
[2] *Dwelling units refers to hotel/motel guest rooms and units in a multifamily residential occupancy.*
[3] *DHW systems serving 2 or more dwelling units are considered "Central Systems" for multifamily occupancies*

C. COMPLIANCE RESULTS

Table C will indicate if the project data input into the compliance document is compliant with water heating requirements. If this table says "DOES NOT COMPLY" or "COMPLIES with Exceptional Conditions" refer to Table D. or the table indicated as not compliant for guidance.

01	02	03	04
Domestic Hot Water Equipment	Distribution Systems	Controls	**Compliance Results**
Table F	Table G	Table H	
Yes	Yes	Yes	COMPLIES

D. EXCEPTIONAL CONDITIONS

This table is auto-filled with uneditable comments because of selections made or data entered in tables throughout the form.

STATE OF CALIFORNIA
Domestic Water Heating System
CALIFORNIA ENERGY COMMISSION

CERTIFICATE OF COMPLIANCE		NRCC-PLB-E
Project Name: AMS PCs Water Heating - T24-22	Report Page:	(Page 2 of 6)
	Date Prepared:	2023-03-06T10:41:54-05:00

E. ADDITIONAL REMARKS

This table includes remarks made by the permit applicant to the Authority Having Jurisdiction.

F. DOMESTIC HOT WATER EQUIPMENT

This table is used to demonstrate compliance with mandatory equipment requirements in 110.1 and 110.3. Compliance with prescriptive requirements in 140.5(c) / 170.2(d) must also be demonstrated and with 141.0 / 180.1/ 180.2 for addition and alteration scopes.

Equipment Schedule: Water Heating Efficiency and Standby Loss

03	04			05		06		
System Name	EWH-1	Exception to 140.5(c)/ 170.2(d)3		Exceptions Do Not Apply	☐	Gas Service Water Heating System >= 1MMBtu/h[1]	Capacity-weighted Average Efficiency %	
07	08	09	10		11	12	13	14	15
Name or Item Tag	Equipment Type	Volume (gal)	Rated Input Capacity (Btu/h)	Max GPM/ First Hour Rating (FHR)	Rated Efficiency	Minimum Efficiency Required	Efficiency Unit	Designed Standby Loss	Maximum Standby Loss
EWH-1	Commercial Electric Storage Water Heater	20	6,824					1.25	1.65

[1] *FOOTNOTE: In systems >= 1MMBtu/h with multiple units, gas water heaters with input capacity > 100,000 Btu/h may meet 90% Et requirements via an input capacity-weighted average.*

Water Heating Equipment All Occupancies

	Yes	No	Not Applicable	Requirement
18	☒	☐	☐	Unfired storage tank insulation shall have Internal + External >=R-16 OR External >=R-3.5. Label required per 110.3(c)3
19	☐	☐	☒	New state buildings 60% of energy for service water heating from site solar energy or recovered energy per 110.3(c)5
20	☐	☐	☒	Isolation valves for instantaneous water heater with input rating >6.8 kBTUH or 2 kW has been specified per 110.3(c)6
21	☐	☐	☒	School buildings < 25,000 ft² and < 4 stories must install a heat pump water heating system per 140.5(a)1. Water heating systems serving an individual bathroom space may be an instantaneous electric water heater.

STATE OF CALIFORNIA
Domestic Water Heating System
CALIFORNIA ENERGY COMMISSION

CERTIFICATE OF COMPLIANCE		NRCC-PLB-E
Project Name: AMS PCs Water Heating - T24-22	Report Page:	(Page 3 of 6)
	Date Prepared:	2023-03-06T10:41:54-05:00

G. DOMESTIC HOT WATER DISTRIBUTION SYSTEM

This table is used to demonstrate compliance for nonresidential occupancies with distribution requirements in 120.3 and 140.5. For multifamily and hotel/motel occupancies, compliance is demonstrated with requirements 110.3(c), 160.4, 170.2(d).

Mandatory Pipe Insulation All Occupancies

13	☐	For systems serving dwelling units, pipe insulation must meet the minimum insulation requirements in Table 160.4-A (see blow) except: • Piping that penetrates framing members shall not be required to have pipe insulation for the distance of the framing penetration. Piping that penetrates metal framing shall use grommets, plugs, wrapping or other insulating material to assure that no contact is made with the metal framing. Insulation shall abut securely against all framing members • Piping installed in interior or exterior walls shall not be required to have pipe insulation if all of the requirements are met for compliance with Quality Insulation Installation (QII) as specified in the Reference Residential Appendix RA3.5. • Piping surrounded with a minimum of 1 inch of wall insulation, 2 inches of crawlspace insulation, or 4 inches of attic insulation, shall not be required to have pipe insulation.
14	☐	For systems serving nonresidential spaces, pipe insulation for the following applications is specified to comply with Table 120.3-A (see below) per 120.3: • Recirculating system piping, including supply and return piping of the water heater • The first 8 ft of hot and cold outlet piping, including between storage tank and heat trap, for a nonrecirculating storage system • Pipes that are externally heated
15	☒	Insulation shall be protected from damage, including that due to sunlight, moisture, equipment maintenance, and wind. Insulation exposed to weather shall be installed with a cover suitable for outdoor service per 120.3(b) / 160.4(f). Pipe insulation buried below grade must be installed in a water proof and non-crushable casing or sleeve.

TABLE 120.3-A / 160.4-A PIPE INSULATION THICKNESS

Fluid Temperature Range (°F)	Conductivity Range (Btu-in per hour per ft² per °F)	Insulation Mean Rating Temp (°F)	Nominal Pipe Diameter (in)			
			< 1	1 to < 1.5	1.5 to < 4	1.5 to < 4 Multifamily & Hotel/Motel
			Minimum Insulation Required			
105-140	0.22 - 0.28	100	1.0 in or R-7.7	1.5 in or R-12.5	1.5 in or R-11	2.0 in or R-16

STATE OF CALIFORNIA
Domestic Water Heating System
CALIFORNIA ENERGY COMMISSION

CERTIFICATE OF COMPLIANCE		NRCC-PLB-E
Project Name: AMS PCs Water Heating - T24-22	Report Page:	(Page 4 of 6)
	Date Prepared:	2023-03-06T10:41:54-05:00

H. DOMESTIC HOT WATER CONTROLS

This table is used to demonstrate compliance with control requirements in 110.3 for all occupancies. For multifamily residential and hotel/motel occupancies, compliance is also demonstrated with requirements in 160.4(e) / 170.2(d).

	Yes	No	Not Applicable	Requirement
01	☒	☐	☐	Construction documents require manufacturer certification that service water-heating systems are equipped with automatic temperature controls capable of adjusting temperature settings per 110.3(a).
02	☐	☐	☒	Systems with capacity > 167,000 BTUH equipped with outlet temperature controls per 110.3(c)1 unless covered by California Plumbing Code 613.0.
03	☐	☐	☒	Controls for circulating pumps or electrical heat trace systems are capable of automatically turning off the system per §110.3(c)2 unless systems serves healthcare facility.
04	☐	☐	☒	For recirculation systems serving multiple dwelling units, design includes automatic pump controls per 170.2(d) or 180.1(b)3 for additions.
05	☐	☐	☒	For recirculation systems serving individual dwelling units, design includes manual on/off controls as specified in Reference Appendix RA4.4.9 per 170.2(d).
06	☐	☐	☒	Combustion air positive shut-off shall be provided per 160.4(3).on all newly installed commercial boilers as follows: • Boilers with input capacity >= 2.5 MMBtu/h, in which the boiler is designed to operate with a nonpositive vent static pressure • Boilers where one stack serves two or more boilers with a total combined input capacity per stack of 2.5 MMBtu/h.
07	☐	☐	☒	Boiler combustion air fans with motor >= 10 hp shall meet one of the following • The fan motor shall be driven by a variable speed drive OR • The fan motor shall include controls that limit the fan motor demand to <=30% of the total design wattage at 50% of the design air volume.
08	☐	☐	☒	Newly installed boilers with an input capacity (d:gte/] 5MMBtu/h and a steady state full-load combustion efficiency < 90% shall maintain excess (stack-gas) oxygen concentrations <= 5% by volume on a dry basis over firing rates of 20-100%. Combustion air volume shall be controlled with respect to firing rate or flue gas oxygen concentration. Use of a common gas and combustion air control linkage or jack shaft is prohibited.

I. DECLARATION OF REQUIRED CERTIFICATES OF INSTALLATION

Form/Title
NRCI-PLB-E - Must be submitted for all buildings

IDENTIFICATION STAMP
DIV. OF THE STATE ARCHITECT
APP: 02-122533 INC:
REVIEWED FOR
SS ☑ FLS ☑ ACS ☑
DATE: 05/22/2024

AMS®
American Modular Systems
787 Spreckels Ave., Manteca, CA 95336
Phone (209) 825-1921 Fax (209) 825-7018
www.americanmodular.com

INTELLECTUAL-PROPERTY & PROPRIETARY RIGHTS STATEMENT
COPYRIGHT © AMERICAN MODULAR SYSTEMS (AMS)
AMS OWNS ALL COPYRIGHT AND OTHER INTELLECTUAL-PROPERTY AND PROPRIETARY RIGHTS IN THESE DRAWINGS, SPECIFICATIONS, AND THE MATERIAL CONTAINED HEREIN. CERTAIN ELEMENTS SHOWN IN THESE DOCUMENTS ARE REGISTERED TRADEMARKS OF AMS. ALL PATENTABLE MATERIALS CONTAINED IN THESE DOCUMENTS AND ORIGINATING WITH AMS WILL REMAIN THE SOLE PROPERTY OF AMS. THESE DRAWING, SPECIFICATIONS AND THE MATERIAL CONTAINED HEREIN MAY NOT BE REPRODUCED, TRANSMITTED, COPIED, DISTRIBUTED, MODIFIED, OR OTHERWISE DISPOSED OF (DIRECTLY OR INDIRECTLY) AND MAY NOT BE USED (IN WHOLE OR IN PART) TO ASSIST IN THE CONSTRUCTION, DESIGN, OR OTHER MAKING OF, OR FOR THE PURPOSE OF FURNISHING ANY INFORMATION FOR THE CONSTRUCTION, DESIGN, OR OTHER MAKING OF, ANY BUILDINGS (MODULAR OR OTHERWISE), DRAWINGS, SPECIFICATIONS, PRINTS, APPARATUS, OR PARTS THEREOF, EXCEPT AS EXPRESSLY PERMITTED BY WRITTEN CONSENT OF, OR IN A WRITTEN AGREEMENT WITH, AMS. SUBMITTAL OR DISTRIBUTION TO MEET OFFICIAL REGULATORY REQUIREMENTS WILL NOT BE CONSTRUED AS PUBLICATION IN DEROGATION OF AMS'S COPYRIGHT OR OTHER INTELLECTUAL-PROPERTY OR PROPRIETARY RIGHTS.

PRE-CHECKED SET NAME
30' x 32' THRU 60' x 32'
2GO®

SITE SPECIFIC PROJECT NAME
.
.
.

APPROVED
DIV. OF THE STATE ARCHITECT
APP: 04-122041 PC
REVIEWED FOR
SS ☑ FLS ☑ ACS ☑ CG ☑
DATE: 04/05/2024

☐ **2022 CBC PRE-CHECK (PC) DOCUMENT**
A SEPARATE PROJECT APPLICATION FOR CONSTRUCTION IS REQUIRED.

MANUFACTURER PROFESSIONAL OF RECORD ON PC

LICENSED ARCHITECT
RANDALL PATRICK CAVANNAGH
No. C12631
Reg. 3-31-25
STATE OF CALIFORNIA

THESE DRAWINGS ARE PRELIMINARY AND NOT FOR CONSTRUCTION UNLESS STAMPED & SIGNED BY THE DESIGN PROFESSIONAL OF RECORD.

REVISIONS
1
2
3
4

DRAWN BY:	A.A.
SCALE:	AS NOTED
DATE:	DD/MM/YY
PROJECT NO:	XXXX-XX

SHEET TITLE:
ENERGY CALCULATIONS
- SUPPLEMENTAL SHEETS

SHEET NUMBER:
EN.36

STATE OF CALIFORNIA
Domestic Water Heating System
CALIFORNIA ENERGY COMMISSION

CERTIFICATE OF COMPLIANCE			NRCC-PLB-E
Project Name:	AMS PCs Water Heating - T24-22	Report Page:	(Page 5 of 6)
		Date Prepared:	2023-03-06T10:41:54-05:00

J. DECLARATION OF REQUIRED CERTIFICATES OF ACCEPTANCE

There are no forms required for this project.

K. DECLARATION OF REQUIRED CERTIFICATES OF VERIFICATION

There are no forms required for this project.

STATE OF CALIFORNIA
Domestic Water Heating System
CALIFORNIA ENERGY COMMISSION

CERTIFICATE OF COMPLIANCE			NRCC-PLB-E
Project Name:	AMS PCs Water Heating - T24-22	Report Page:	(Page 6 of 6)
Project Address:		Date Prepared:	2023-03-06T10:41:54-05:00

DOCUMENTATION AUTHOR'S DECLARATION STATEMENT

I certify that this Certificate of Compliance documentation is accurate and complete.

Documentation Author Name: Hans Marsman		Documentation Author Signature:	
Company:	Marsman Consulting	Signature Date:	
Address:	1150 J Street #409	CEA/ HERS Certification Identification (if applicable):	
City/State/Zip:	San Diego, CA 92101	Phone:	(619) 573-6374

Digitally signed by Hans Marsman, LEED AP, CEA
Date: 2023.03.06 09:51:00-05'00'

RESPONSIBLE PERSON'S DECLARATION STATEMENT

I certify the following under penalty of perjury, under the laws of the State of California:
1. The information provided on this Certificate of Compliance is true and correct.
2. I am eligible under Division 3 of the Business and Professions Code to accept responsibility for the building design or system design identified on this Certificate of Compliance (responsible designer)
3. The energy features and performance specifications, materials, components, and manufactured devices for the building design or system design identified on this Certificate of Compliance conform to the requirements of Title 24, Part 1 and Part 6 of the California Code of Regulations.
4. The building design features or system design features identified on this Certificate of Compliance are consistent with the information provided on other applicable compliance documents, worksheets, calculations, plans and specifications submitted to the enforcement agency for approval with this building permit application.
5. I will ensure that a completed signed copy of this Certificate of Compliance shall be made available with the building permit(s) issued for the building, and made available to the enforcement agency for all applicable inspections. I understand that a completed signed copy of this Certificate of Compliance is required to be included with the documentation the builder provides to the building owner at occupancy.

Responsible Designer Name:	Randall P Cavannagh	Responsible Designer Signature:	
Company:	American Modular Systems | Gen7 Schools	Date Signed:	03/04/2023
Address:	787 Spreckels Avenue	License:	C12631
City/State/Zip:	Manteca, CA 95336	Phone:	209.825.1921

STATE OF CALIFORNIA
Solar And Battery
CALIFORNIA ENERGY COMMISSION

CERTIFICATE OF COMPLIANCE			NRCC-SAB-E
Project Name:	AMS PC 30-60x32 2Go	Report Page:	(Page 1 of 7)
Project Address:		Date Prepared:	2023-10-10T20:57:21-04:00

This document is used to demonstrate compliance with prescriptive PV and battery requirements in 140.10/ 170.2 for nonresidential, multifamily and mixed-use buildings and prescriptive solar thermal requirements in 170.2(d)3C for multifamily and hotel/ motel occupancies. When PV/battery/solar thermal requirements don't apply or are traded using the performance approach, this document demonstrates compliance with mandatory solar readiness requirements in 110.10/ 160.8 for newly constructed buildings which are either multifamily ten stories or fewer, hotel/motel ten stories or fewer or all other nonresidential buildings three stories or fewer. It is also used to demonstrate compliance with solar readiness in 110.10/ 160.8 for additions to nonresidential, multifamily or hotel/motel building types which add more than 2,000 ft^2 of roof area. Alterations, or additions of less than 2,000 ft^2 of roof area, are not required to comply with solar readiness, solar PV and battery requirements and do not need to complete this document.

A. GENERAL INFORMATION

01	Project Location (city)	Palm Spring-Intl	04	Building Occupancies	School or Classroom
02	Climate Zone	15	05	Construction Type	New construction
03	Conditioned Floor Area (ft^2)	1920	06	Number of Stories	Bldg <= 3 stories

B. PROJECT SCOPE

The compliance path the project is using to comply per 110.10(b)1B/ 140.10/ 170.2(g and h) is indicated below.

Compliance with Solar Readiness Requirements in 110.10(b)1B

	01	
☒	Provide Solar Ready Area no exceptions	The project has allocated a solar zone on the roof plan per requirements in §110.10(b), as documented in Table F.
☐	Exception to Solar Ready Area: Installed Solar Photovoltaic System	The project includes a permanently installed solar electric system having a nameplate DC power rating, measured under Standard Test Conditions, of no less than one watt per square foot of roof area as documented in Table G.
☐	Exception to Solar Ready Area: Installed Solar Water Heating System	The project is a hotel/motel or high-rise multifamily occupancy and includes a permanently installed domestic solar water-heating system complying with 170.2(d)3C and Reference Residential Appendix RA4, as documented in Table H.
☐	Exception to Solar Ready Area: Smart Thermostat and Alternative Energy Efficiency Measure	The project is a multifamily occupancy where all thermostats in each dwelling unit comply with §110.12(a) AND at least one additional measure listed in Exception 4 to §110.10(b)1B is installed, as documented in Table I.
☐	Exception to Solar Ready Area: Roof is designed for vehicular traffic, parking or for heliport	Plan sheet showing roof designed for vehicular traffic, parking or heliport
☐	Exception to Solar Ready Area: Roof too small	The project is new construction and has a total roof area <= 533 square feet[1]
☐	Exception to Solar Ready Area: Number of building stories	The project is nonresidential > 3 stories or multifamily/ hotel/motel > 10 stories.

[1]FOOTNOTE: Buildings with roof area <=533 ft^2 would have a required solar zone < 80 ft^2 and are therefore exempt per 110.10(b)1.

STATE OF CALIFORNIA
Solar And Battery
CALIFORNIA ENERGY COMMISSION

CERTIFICATE OF COMPLIANCE			NRCC-SAB-E
Project Name:	AMS PC 30-60x32 2Go	Report Page:	(Page 2 of 7)
		Date Prepared:	2023-10-10T20:57:21-04:00

Compliance with Solar Photovoltaic (PV) and Battery Requirements in 140.10/ 170.2(g and h)

	01	
☐	Provided PV system and battery storage sized per 140.10/ 170.2 (g and h)	The project has included an installed PV system and battery storage system per requirements in 140.10/ 170.2(g and h) as documented in Table J.
☐	Exception to PV and Battery: Not enough Solar Access Roof Area	The total of all available Solar Access Roof Area(s) of the project site is less than three percent of the conditioned floor area as documented in Table J.
☐	Exception to PV and Battery: Required PV < 4kW	The required PV system size is less than 4 kW dc as documented in Table J..
☐	Exception to PV and Battery: No contiguous Solar Access Roof Area	The Solar Access Roof Area(s) of the project site contains less than 80 contiguous square feet as documented in Table J.
☐	Exception to PV and Battery: Can't meet snow load	The project has a roof design where the enforcement authority has verified it is not possible for the PV system, including panels, modules, components, supports, and attachments to the roof structure, to meet ASCE 7-16 Chapter 7, Snow Loads.
☐	Exception to PV and Battery: Multi-tenant without VNEM or Community Solar	The project is a multi-tenant building in an area where a load serving entity does not provide either a Virtual Net Metering (VNEM) or community solar program.
☒	The prescriptive PV/battery requirement has been traded off using the performance compliance approach as documented on the PRF Certificate of Compliance form.	

Compliance with Solar Thermal Water Heating Requirements in 170.2(d)3C (Multifamily and hotel/ motel occupancies only)

	01	
☐	The project includes a hotel/motel or multifamily occupancy with a gas or propane central water-heating system (serves 2+ dwelling units) and includes a permanently installed domestic solar water-heating system to comply with 170.2(d)3C and Reference Residential Appendix RA4, as documented in Table H.	Compliance meets Exception 2 to solar ready requirements in 110.10(b).

STATE OF CALIFORNIA
Solar And Battery
CALIFORNIA ENERGY COMMISSION

CERTIFICATE OF COMPLIANCE			NRCC-SAB-E
Project Name:	AMS PC 30-60x32 2Go	Report Page:	(Page 3 of 7)
		Date Prepared:	2023-10-10T20:57:21-04:00

C. COMPLIANCE RESULTS

Results in this table are automatically calculated from data input and calculations in Tables F through I. Note: If any cell on this table says "DOES NOT COMPLY" or "COMPLIES with Exceptional Conditions" refer to Table D. for guidance or see the applicable Table referenced below.

Allocated Solar Zone				Installed PV System				Installed SWH System				Smart Tstat and Alternative EE Measure		Compliance Results
01		02		03		04		05		06		07	08	
Required Minimum Area (ft^2)	<=	Designated Area (ft^2)	OR	Required Minimum DC Power Rating (Watts)	<=	Designed DC Power Rating (Watts)	OR	Required Minimum Solar Savings Fraction	<=	Designed/Rated Solar Savings Fraction	OR	JA5 Compliant Thermostat Specified?	Alternative Energy Efficiency Measure	COMPLIES
(See Table F)				(See Tables G or J)				(See Table H)				(See Table I)		
288	<=	288	OR		<=		OR		<=		OR			
A2.0 Roofing Plan for Solar Zones				Location in construction documents showing the location for inverters and metering equipment and a pathway for the routing of conduit/ plumbing to the electrical service/ water heating system per §110.10(c).										COMPLIES
Battery storage system design meets the minimum requirements in Joint Appendix JA12 and the minimum energy (kWh)/ power (kW) capacity per Table J.														Not Applicable

D. EXCEPTIONAL CONDITIONS

This table is auto-filled with uneditable comments because of selections made or data entered in tables throughout the form.

E. ADDITIONAL REMARKS

This table is includes remarks made by the permit applicant to the Authority Having Jurisdiction.

STATE OF CALIFORNIA
Solar And Battery
CALIFORNIA ENERGY COMMISSION

CERTIFICATE OF COMPLIANCE			NRCC-SAB-E
Project Name:	AMS PC 30-60x32 2Go	Report Page:	(Page 4 of 7)
		Date Prepared:	2023-10-10T20:57:21-04:00

F. ALLOCATED SOLAR ZONE

This table is completed if the project is designating a solar zone to comply with §110.10(b)1B. New construction consider the total roof area; Additions consider newly added roof area. This table demonstrates that the project has designated the minimum area required for the Allocated Solar Zone, and also that the requirements for Solar Zone Subareas have been met. Each subarea must be shown on a roof plan or documented in construction documents. The solar zones must also comply with fire code requirements, including, but not limited to, setback and pathway requirements. Requirements for interconnection pathways must also be included in construction documents, and the location is specified in this table.

Required Minimum Solar Zone

01	02	03	04	05	06			07	08
Minimum Solar Zone Area Calculation Method	Total New or Added Roof Area (ft^2)	Total New or Added Roof Area Covered with Skylights (ft^2)	Minimum Solar Zone Based on Total or Added Roof Area (0.15 x (Roof-Skylit)) (ft^2)	Method/ Tools Used to Determine Annual Solar Access for Potential Zones[1]	Potential Solar Zone Areas: Roof areas with >= 70% Solar Access			Minimum Solar Zone Based on Potential Zone (0.5 x (Total Potential Zone)) (ft^2)	Required Minimum Solar Zone Area (ft^2)
					Low-Sloped Area (<= 2:12 pitch) (ft^2)	Steep-Sloped Area (> 2:12 pitch) Oriented 90 ° - 300 ° (ft^2)	Total Potential Solar Zone Area (ft^2)		
Total New or Added Roof Area	1920	0	288						288

Designated Solar Zone Subareas

09	10	11	12	13	14	15	16	17	18	19
Subarea Name or Tag	Building Plan Reference	Roof or Overhang Slope (Low <= 2:12 pitch) (Steep > 2:12 pitch)	Is Steep-Sloped Roof or Overhang between 90 and 300 degrees?	Subarea Complies with Title 24, Part 9	Solar Zone Subarea Free of Obstructions per §110.10(b)3A	Subarea is Required Distance from Potential Obstructions per §110.10(b)3B	Is the Smallest Dimension 5 feet or greater?	Min. Area Required per Subarea (ft^2)	Designated Area (ft^2)	Subarea Complies?
A2.0 Roofing Plan for Solar Zones	A2.0 Roofing Plan for Solar Zones	Low slope		Yes	Yes	Yes	Yes	80	288	COMPLIES

STATE OF CALIFORNIA
Solar And Battery
CALIFORNIA ENERGY COMMISSION

CERTIFICATE OF COMPLIANCE			NRCC-SAB-E
Project Name:	AMS PC 30-60x32 2Go	Report Page:	(Page 5 of 7)
		Date Prepared:	2023-10-10T20:57:21-04:00

Interconnection Pathways

Location in construction documents showing the location for inverters and metering equipment and a pathway for the routing of conduit/ plumbing to the electrical service/ water heating system per §110.10(c).	A2.0 Roofing Plan for Solar Zones

[1]FOOTNOTE: This field is used to document how the percentage of annual solar access was determined per §110.10(b)1B. Solar access is the ratio of solar insolation including shade to the solar insolation without shade. Shading from obstructions located on the roof or any other part of the building shall not be included in the determination of annual solar access.

G. PERMANENTLY INSTALLED SOLAR PV FOR SOLAR READY EXCEPTION

This section does not apply to this project.

H. PERMANENTLY INSTALLED SOLAR HOT WATER SYSTEMS

This section does not apply to this project.

I. SMART THERMOSTATS AND ALTERNATIVE EFFICIENCY MEASURE FOR SOLAR READY EXCEPTION

This section does not apply to this project.

J. PHOTOVOLTAIC (PV) AND BATTERY SYSTEMS

This section does not apply to this project.

K. DECLARATION OF REQUIRED CERTIFICATES OF INSTALLATION

Selections have been made based on information provided in this document. If any selections have been changed by the permit applicant, an explanation should be included Table E. Additional Remarks and ExceptionalConditionMessageCCSABE += UserChangedSelectionInCI. These documents must be provided to the building inspector during construction and can be found online

Form/Title
NRCI-SAB-01-E - Must be submitted for all buildings that must comply with solar readiness or PV/Battery requirements.

STATE OF CALIFORNIA
Solar And Battery
CALIFORNIA ENERGY COMMISSION

CERTIFICATE OF COMPLIANCE			NRCC-SAB-E
Project Name:	AMS PC 30-60x32 2Go	Report Page:	(Page 6 of 7)
		Date Prepared:	2023-10-10T20:57:21-04:00

L. DECLARATION OF REQUIRED CERTIFICATES OF ACCEPTANCE

There are no forms required for this project.

STATE OF CALIFORNIA
Solar And Battery
CALIFORNIA ENERGY COMMISSION

CERTIFICATE OF COMPLIANCE			NRCC-SAB-E
Project Name:	AMS PC 30-60x32 2Go	Report Page:	(Page 7 of 7)
Project Address:		Date Prepared:	2023-10-10T20:57:21-04:00

DOCUMENTATION AUTHOR'S DECLARATION STATEMENT

I certify that this Certificate of Compliance documentation is accurate and complete.

Documentation Author Name: Hans Marsman		Documentation Author Signature:	
Company:	Marsman Consulting	Signature Date:	
Address:	1150 J Street #409	CEA/ HERS Certification Identification (if applicable):	
City/State/Zip:	San Diego, CA 92101	Phone:	(619) 573-6374

Digitally signed by Hans Marsman, LEED AP, CEA
Date: 2023.10.10 15:07:47-06'00'

RESPONSIBLE PERSON'S DECLARATION STATEMENT

I certify the following under penalty of perjury, under the laws of the State of California:
1. The information provided on this Certificate of Compliance is true and correct.
2. I am eligible under Division 3 of the Business and Professions Code to accept responsibility for the building design or system design identified on this Certificate of Compliance (responsible designer)
3. The energy features and performance specifications, materials, components, and manufactured devices for the building design or system design identified on this Certificate of Compliance conform to the requirements of Title 24, Part 1 and Part 6 of the California Code of Regulations.
4. The building design features or system design features identified on this Certificate of Compliance are consistent with the information provided on other applicable compliance documents, worksheets, calculations, plans and specifications submitted to the enforcement agency for approval with this building permit application.
5. I will ensure that a completed signed copy of this Certificate of Compliance shall be made available with the building permit(s) issued for the building, and made available to the enforcement agency for all applicable inspections. I understand that a completed signed copy of this Certificate of Compliance is required to be included with the documentation the builder provides to the building owner at occupancy.

Responsible Designer Name:	Randall P Cavannagh	Responsible Designer Signature:	
Company:	American Modular Systems | Gen7 Schools	Date Signed:	10/10/2023
Address:	787 Spreckels Avenue	License:	C12631
City/State/Zip:	Manteca, CA 95336	Phone:	209.825.1921

IDENTIFICATION STAMP
DIV. OF THE STATE ARCHITECT
APP: 02-122533 INC:
REVIEWED FOR
SS ☑ FLS ☑ ACS ☑
DATE: 05/22/2024

AMS®
American Modular Systems
787 Spreckels Ave., Manteca, CA 95336
Phone (209) 825-1921 Fax (209) 825-7018
www.americanmodular.com

INTELLECTUAL-PROPERTY & PROPRIETARY RIGHTS STATEMENT
COPYRIGHT © AMERICAN MODULAR SYSTEMS (AMS)
AMS OWNS ALL COPYRIGHT AND OTHER INTELLECTUAL-PROPERTY AND PROPRIETARY RIGHTS IN THESE DRAWINGS, SPECIFICATIONS, AND THE MATERIAL CONTAINED HEREIN. CERTAIN ELEMENTS SHOWN IN THESE DOCUMENTS ARE REGISTERED TRADEMARKS OF AMS. ALL PATENTABLE MATERIALS CONTAINED IN THESE DOCUMENTS AND ORIGINATING WITH AMS WILL REMAIN THE SOLE PROPERTY OF AMS. THESE DRAWING, SPECIFICATIONS AND THE MATERIAL CONTAINED HEREIN MAY NOT BE REPRODUCED, TRANSMITTED, COPIED, DISTRIBUTED, MODIFIED, OR OTHERWISE DISPOSED OF (DIRECTLY OR INDIRECTLY) AND MAY NOT BE USED (IN WHOLE OR IN PART) TO ASSIST IN THE CONSTRUCTION, DESIGN, OR OTHER MAKING OF, OR FOR THE PURPOSE OF FURNISHING ANY INFORMATION FOR THE CONSTRUCTION, DESIGN, OR OTHER MAKING OF, ANY BUILDINGS (MODULAR OR OTHERWISE), DRAWINGS, SPECIFICATIONS, PRINTS, APPARATUS, OR PARTS THEREOF, EXCEPT AS EXPRESSLY PERMITTED BY WRITTEN CONSENT OF, OR IN A WRITTEN AGREEMENT WITH, AMS. SUBMITTAL OR DISTRIBUTION TO MEET OFFICIAL REGULATORY REQUIREMENTS WILL NOT BE CONSTRUED AS PUBLICATION IN DEROGATION OF AMS'S COPYRIGHT OR OTHER INTELLECTUAL-PROPERTY OR PROPRIETARY RIGHTS.

PRE-CHECKED SET NAME

30' x 32' THRU 60' x 32'

2GO®

SITE SPECIFIC PROJECT NAME

.
.
.

APPROVED
DIV. OF THE STATE ARCHITECT
APP: 04-122041 PC
REVIEWED FOR
SS ☑ FLS ☑ ACS ☑ CG ☑
DATE: 04/05/2024

☐ **2022 CBC PRE-CHECK (PC) DOCUMENT**
A SEPARATE PROJECT APPLICATION FOR CONSTRUCTION IS REQUIRED.

MANUFACTURER PROFESSIONAL OF RECORD ON PC

LICENSED ARCHITECT
RANDALL PATRICK CAVANNAGH
No. C12631
Ren. 3-31-25
STATE OF CALIFORNIA

THESE DRAWINGS ARE PRELIMINARY AND NOT FOR CONSTRUCTION UNLESS STAMPED & SIGNED BY THE DESIGN PROFESSIONAL OF RECORD.

REVISIONS
1
2
3
4

DRAWN BY:	A.A.
SCALE:	AS NOTED
DATE:	DD/MM/YY
PROJECT NO:	XXXX-XX

SHEET TITLE:

ENERGY CALCULATIONS
- SUPPLEMENTAL SHEETS

SHEET NUMBER:

EN.37

CERTIFICATE OF COMPLIANCE

This document is used to demonstrate compliance with mandatory requirements in §130.5 for electrical systems in newly constructed nonresidential and hotel/motel occupancies and §160.6 and §160.9 for electrical systems in newly constructed multifamily occupancies. Additions and alterations to electrical service systems in nonresidential & hotel/motel occupancies will also use this document to demonstrate compliance per §141.0(a) or §141.0(b)2P for alterations. For multifamily addition or alterations compliance will be documented per §180.1(a) or §180.2(b)4Bvii.

Project Name:	PC 48'-240'x40'	Enforcement Agency:	DSA
Dwelling Address:	N/A	Permit Number:	N/A
City and Zip Code:	N/A	Permit Application Date:	

A. GENERAL INFORMATION

01	Project Location (city)					02	Climate Zone				
						03	Occupancy Types Within Project:				
☐	Office	☐	Retail	☐	Warehouse	☐	Hotel/ Motel	☒	School	☐	Support Areas
☐	High-Rise Residential Multifamily/ MF Mixed-use >= 4 stories (new construction)	☐	High-Rise Residential Multifamily/ MF Mixed-use >= 4 stories (Addition or Alteration)	☐	Healthcare Facilities	☐	Parking Garage				
				☐	Relocatable	☐	All Others	☐	Theater	☐	Sports Arena
☐	Auditorium	☐	Commercial/ Industrial	☐	Grocery Store	☐	Religious Facility	☐	Data Center	☐	Convention Center
☐	Classroom	☐	Library	☐	Gymnasium	☐	Restaurant/ Commercial Kitchen	☐	Financial Institution	☐	Medical Clinic

B. PROJECT SCOPE

This table includes electrical service systems that are within the scope of the permit application.

01	02	03	04	05	06	07
Electrical Service Designation/ Description	Scope of Work[1]	Rating[2] (kVA)	Utility Provided Metering System Exception to §130.5(a)/§160.6(a)[3]	System subject to CA Elec Code Article 517 Exception to §130.5(a)&(b)	Demand Response Controls Where required, demand response controls must be specified which are capable of receiving and automatically responding to at least one standard based messaging protocol which enables demand response after receiving a demand response signal. Sections §120.2/§160.3, §130.1/§160.5 and §130.3/§160.5 and mechanical, indoor lighting, and sign lighting Certificate of Compliance documents-will indicate when demand response controls are required.	Provides power to dwelling units/common living areas only in multifamily occupancy
			☐	☐		☐

[1]FOOTNOTES: Adding only new feeders and branch circuits triggers Voltage Drop 130.5(c)/160.6(c), no other requirements from 130.5/160.6 are required.
[2] If common use areas in a multifamily occupancy are submetered, rating is for submeter size serving common use areas.
[3] Applicable if the utility company is providing a metering system that indicates instantaneous kW demand and kWh for a utility-defined period.

C. COMPLIANCE RESULTS

Results in this table are automatically calculated from data input and calculations in Tables F through J.

Note: If any cell on this table says "COMPLIES with Exceptional Conditions" refer to Table D. Exceptional Conditions for guidance or see the applicable Table referenced below.

01		02		03		04		05		06
Service Electrical Metering §130.5(a)/ §160.6(a)	AND	Separation for Monitoring §130.5(b)/ §160.6(b)	AND	Voltage Drop §130.5(c)/ §160.6(c)	AND	Controlled Receptacles §130.5(d)/ §160.6(d)	AND	Electric Ready §160.9		Compliance Results
(See Table F)		(See Table G)		(See Table H)		(See Table I)		(See Table J)		
Yes/No	**AND**	Yes/No	**AND**	Yes/No	**AND**	Yes/No	**AND**	Yes/No		**COMPLIES, DOES NOT COMPLY, Or COMPLIES with Exceptional Conditions**

D. EXCEPTIONAL CONDITIONS

This table is auto-filled with uneditable comments because of selections made or data entered in tables throughout the form.

E. ADDITIONAL REMARKS

This table includes remarks made by the installer to the Authority Having Jurisdiction.

F. SERVICE ELECTRICAL METERING

This table includes new or replacement electrical service systems OR equipment to demonstrate compliance with §130.5(a)/§160.6(a). For multifamily occupancies, submetered systems that provide power to common use areas must meet the following metering requirements. Submetered systems providing power to dwelling units do not.

01	02	F. SERVICE ELECTRICAL METERING 03				04	05	
		Required Metering Capabilities per Table 130.5-A					Field Inspector	
Electrical Service Designation/ Description	Rating[1] (kVA)	Instantaneous Demand (kW)	Historical Peak Demand (kW)	Tracking kWh for user-defined period	kWh per rate period	Location of Requirements in Construction Documents	Pass	Fail
		☐	☐	☐	☐		☐	☐
		☐	☐	☐	☐		☐	☐

[1]FOOTNOTES: If common use areas in a multifamily occupancy are submetered, rating is for submeter size serving common use areas.

G. SEPARATION OF ELECTRICAL CIRCUITS FOR ENERGY MONITORING

This table includes entirely new or complete replacement electrical power distribution systems to demonstrate compliance with §130.5(b)/§160.6(b). Any load types that are not included in the service do not need to be shown. For multifamily occupancies, submetered systems that provide power to dwelling units do not need to meet these separation requirements and therefore load types on those submetered systems also do not need to be shown.

Electrical Service Designation/ Description:					
01	02	03	04	05	
				Field Inspector	
Load Type per Table 130.5-B[1]	Minimum Required Separation of Load per Table 130.5-B	Compliance Method[2]	Location of Requirements in Construction Documents	Pass	Fail
				☐	☐

NOTES If "Other" is selected under Compliance Method above, please indicate how compliance has been achieved in the space provided below.
[1] FOOTNOTES: For each separate load type, up to 10% of the connected load may be of any type.
[2] Method 1: Switchboards/ motor control centers/ panelboard loads disaggregated for each load type.
Method 2: Switchboards/ motor control centers/ panelboard supply other distribution equipment with loads disaggregated for each load type.
Method 3: Branch circuits serve load types individually & provisions for adding future branch circuit monitoring.
Method 4: Complete metering system measures and reports loads by type.
See Chapter 8 of the Nonresidential Compliance Manual for more detail on Compliance Methods.

H. VOLTAGE DROP

This table includes entirely new or complete replacement electrical power distribution systems, or alterations that add, modify or replace both feeders and branch circuits to demonstrate compliance with §130.5(c)/§160.6(c). For alterations, only the altered circuits must demonstrate compliance per §141.0(b)2Piii/§180.2(b) 4Bviic.

NOTES If "Permitted by CA Elec Code" is selected under Compliance Method above, please indicate where the exception applies in the space provided below.

01	02		03	04	05	
Electrical Service Designation/ Description	Combined Voltage Drop on Installed Feeder/Branch Circuit Conductors Compliance Method		Location of Voltage Drop Calculations[1]	Sheet Number for Voltage Drop Calculations in Construction Documents	Field Inspector	
					Pass	Fail
	☐ Voltage drop ≤ 5%	☐ Permitted by CA Elec Code (Exception to §130.5(c))*			☐	☐

[1] FOOTNOTES: Voltage drop calculations may be attached to the permit application outside the construction documents if allowed by the Authority Having Jurisdiction. Select "attached" if applicable. If calculations will be the responsibility of the installing contractor, select "Contractor Responsible".

I. CIRCUIT CONTROLS FOR 120-VOLT RECEPTACLES AND CONTROLLED RECEPTACLES

This table includes entirely new or complete replacement electrical power distribution systems to demonstrate compliance with §130.5(d)/§160.6(d). Both controlled and uncontrolled receptacles must be provided in office areas, lobbies, conference rooms, kitchen areas in office spaces, copy rooms and hotel/motel guest rooms.

01	02	03	04	05	06	07	
Room Name or Description	Location/ Type of Controlled Receptacles[1]	Shut-Off Controls	Demand Responsive Controls	Permanent Durable Marking Will be Used	Location of Requirements in Construction Documents	Field Inspector	
						Pass	Fail
				☐		☐	☐

NOTES: If "Other" is selected under Shut-Off Controls above, please indicate how compliance has been achieved in the space provided below.

[1] FOOTNOTES: Receptacles dedicated to refrigerators and water dispensers in kitchens, located a minimum of 6ft above the floor specifically for clocks, network copiers, fax machines, A/V and data equipment other than personal computers in copy rooms, circuits rated more than 20 Amps, or connected to a UPS that are intended to be in continuous use and are marked to differentiate them from other receptacles or circuits are excepted from the requirements.

J. ELECTRIC READY BUILDINGS

This table includes electrical system requirements that must be met when using gas or propane heating, cooking or clothes drying in multifamily occupancies to demonstrate compliance with §160.9.

01	Systems serving multifamily occupancy that use gas or propane include:	☐ Furnaces serving individual dwelling units	☐ Cooktops serving individual dwelling units	☐ Clothes dryers serving individual dwelling units	☐ Clothes dryers in common areas	☐ None of these

Gas/ Propane Furnaces Serving Individual Dwelling Units (Heat Pump Space Heater Ready)

	Yes	Requirement
02	☐	A dedicated 240 volt branch circuit shall be installed within 3 feet from the furnace and accessible to the furnace with no obstructions. The branch circuit shall be rated at 30 amps minimum. The blank cover shall be identified as "240V ready". All electrical components shall be installed in accordance with the California Electrical Code.
03	☐	The main electrical service panel shall have a reserved space to allow for the installation of a double pole circuit breaker for a future heat pump space heater installation. The reserved space shall be permanently marked as "For Future 240V use".

Gas/ Propane Cooktops Serving Individual Dwelling Units

	Yes	Requirement
04	☐	A dedicated 240 volt branch circuit shall be installed within 3 feet from the cooktop and accessible to the cooktop with no obstructions. The branch circuit shall be rated at 50 amps minimum. The blank cover shall be identified as "240V ready". All electrical components shall be installed in accordance with the California Electrical Code.
05	☐	The main electrical service panel shall have a reserved space to allow for the installation of a double pole circuit breaker for a future electric cooktop installation. The reserved space shall be permanently marked as "For Future 240V use".

Gas/ Propane Clothes Dryers Serving Individual Dwelling Units

	Yes	Requirement
06	☐	A dedicated 240 volt branch circuit shall be installed within 3 feet from the clothes dryer and accessible to the clothes dryer with no obstructions. The branch circuit shall be rated at 30 amps minimum. The blank cover shall be identified as "240V ready". All electrical components shall be installed in accordance with the California Electrical Code.
07	☐	The main electrical service panel shall have a reserved space to allow for the installation of a double pole circuit breaker for a future electric clothes dryer installation. The reserved space shall be permanently marked as "For Future 240V use".

Gas/ Propane Clothes Dryers In Common Areas

	Yes	Requirement
08	☐	Conductors or raceway shall be installed with termination points at the main electrical panel, via subpanels panels if applicable, to a location no more than 3 feet from each gas outlet or a designated location of future electric replacement equipment. Both ends of the conductors or raceway shall be labelled "Future 240V Use." The conductors or raceway and any intervening subpanels, panelboards, switchboards, and busbars shall be sized to meet the future electric power requirements, at the service voltage to the point at which the conductors serving the building connect to the utility distribution system, as specified below. The capacity requirements may be adjusted for demand factors in accordance with the California Electric Code. Gas flow rates shall be determined in accordance with the California Plumbing Code. Capacity shall be one of the following: - 24 amps at 208/240 volts per clothes dryer; - 2.6 kVA for each 10,000 Btu per hour of rated gas input or gas pipe capacity; or - The electrical power required to provide equivalent functionality of the gas-powered equipment as calculated by the responsible person.

K. DECLARATION OF REQUIRED CERTIFICATES OF INSTALLATION

Selections have been made based on information provided in this document. If any selections have been changed by the permit applicant, an explanation should be included in Table E. Additional Remarks. These documents must be provided to the building inspector during construction and can be found online.

YES	NO	Form/Title	Field Inspector	
			Pass	Fail
●	❍	NRCI-ELC-E - Must be submitted for all buildings.	☐	☐

L. DECLARATION OF REQUIRED CERTIFICATES OF ACCEPTANCE

There are no Certificates of Acceptance applicable to electrical power distribution requirements.

IDENTIFICATION STAMP
DIV. OF THE STATE ARCHITECT
APP: 02-122533 INC:
REVIEWED FOR
SS ☑ FLS ☑ ACS ☑
DATE: 05/22/2024

American Modular Systems
787 Spreckels Ave., Manteca, CA 95336
Phone (209) 825-1921 Fax (209) 825-7018
www.americanmodular.com

INTELLECTUAL-PROPERTY & PROPRIETARY RIGHTS STATEMENT
COPYRIGHT © AMERICAN MODULAR SYSTEMS (AMS)
AMS OWNS ALL COPYRIGHT AND OTHER INTELLECTUAL-PROPERTY AND PROPRIETARY RIGHTS IN THESE DRAWINGS, SPECIFICATIONS, AND THE MATERIAL CONTAINED HEREIN. CERTAIN ELEMENTS SHOWN IN THESE DOCUMENTS ARE REGISTERED TRADEMARKS OF AMS. ALL PATENTABLE MATERIALS CONTAINED IN THESE DOCUMENTS AND ORIGINATING WITH AMS WILL REMAIN THE SOLE PROPERTY OF AMS. THESE DRAWING, SPECIFICATIONS, AND THE MATERIAL CONTAINED HEREIN MAY NOT BE REPRODUCED, TRANSMITTED, COPIED, DISTRIBUTED, MODIFIED, OR OTHERWISE DISPOSED OF (DIRECTLY OR INDIRECTLY) AND MAY NOT BE USED (IN WHOLE OR IN PART) TO ASSIST IN THE CONSTRUCTION, DESIGN, OR OTHER MAKING OF, OR FOR THE PURPOSE OF FURNISHING ANY INFORMATION FOR THE CONSTRUCTION, DESIGN, OR OTHER MAKING OF, ANY BUILDINGS (MODULAR OR OTHERWISE), DRAWINGS, SPECIFICATIONS, PRINTS, APPARATUS, OR PARTS THEREOF, EXCEPT AS EXPRESSLY PERMITTED BY WRITTEN CONSENT OF, OR IN A WRITTEN AGREEMENT WITH, AMS. SUBMITTAL OR DISTRIBUTION TO MEET OFFICIAL REGULATORY REQUIREMENTS WILL NOT BE CONSTRUED AS PUBLICATION IN DEROGATION OF AMS'S COPYRIGHT OR OTHER INTELLECTUAL-PROPERTY OR PROPRIETARY RIGHTS.

PRE-CHECKED SET NAME
30' x 32' THRU 60' x 32'
2GO®

SITE SPECIFIC PROJECT NAME
.
.
.

APPROVED
DIV. OF THE STATE ARCHITECT
APP: 04-122041 PC
REVIEWED FOR
SS ☑ FLS ☑ ACS ☑ CG ☑
DATE: 04/05/2024

☐ 2022 CBC PRE-CHECK (PC) DOCUMENT
A SEPARATE PROJECT APPLICATION FOR CONSTRUCTION IS REQUIRED.

MANUFACTURER PROFESSIONAL OF RECORD ON PC

THESE DRAWINGS ARE PRELIMINARY AND NOT FOR CONSTRUCTION UNLESS STAMPED & SIGNED BY THE DESIGN PROFESSIONAL OF RECORD.

REVISIONS
1
2
3
4

DRAWN BY:	A.A.
SCALE:	AS NOTED
DATE:	DD/MM/YY
PROJECT NO:	XXXX-XX

SHEET TITLE:
ENERGY CALCULATIONS - SUPPLEMENTAL SHEETS

SHEET NUMBER:
EN.38

CALIFORNIA ENERGY COMMISSION

ELECTRICAL POWER DISTRIBUTION

CEC-NRCC-ELC-E

DOCUMENTATION AUTHOR'S DECLARATION STATEMENT

1. I certify that this Certificate of Compliance documentation is accurate and complete.

Documentation Author Name: JOSE AREVALO	Documentation Author Signature: Jose M Arevalo
Documentation Author Company Name: AMERICAN MODULAR SYSTEMS	Date Signed: 06/30/23
Address: 787 SPRECKELS AVE	CEA Certification Identification (if applicable):
City/State/Zip: MANTECA, CA	Phone: 209-825-1921

RESPONSIBLE PERSON'S DECLARATION STATEMENT

2. I certify the following under penalty of perjury, under the laws of the State of California:
   1. The information provided on this Certificate of Compliance is true and correct.
   2. I am eligible under Division 3 of the Business and Professions Code to accept responsibility for the building design or system design identified on this Certificate of Compliance (responsible designer).
   3. The energy features and performance specifications, materials, components, and manufactured devices for the building design or system design identified on this Certificate of Compliance conform to the requirements of Title 24, Part 1 and Part 6 of the California Code of Regulations.
   4. The building design features or system design features identified on this Certificate of Compliance are consistent with the information provided on other applicable compliance documents, worksheets, calculations, plans and specifications submitted to the enforcement agency for approval with this building permit application.
   5. I understand that a registered copy of this Certificate of Compliance shall be made available with the building permit(s) issued for the building, and made available to the enforcement agency for all applicable inspections, and I will take the necessary steps to accomplish this requirement.
   6. I understand that a registered copy of this Certificate of Compliance is required to be included with the documentation the builder provides to the building owner at occupancy, and I will take the necessary steps to accomplish these requirements.

Responsible Designer Name: Randall Cavanagh	Responsible Designer Signature:
Company: American Modular systems	Date Signed: 6-28-23
Address: 787 Spreckels Avenue	License: C12631
City/State/Zip: Manteca, Ca 95363	Phone: (209)825-1921

For assistance or questions regarding the Energy Standards, contact the Energy Hotline at: 1-800-772-3300

A. General Information
1. Enter the City the project is located in.
2. Climate Zone: Select from dropdown.
3. Select the applicable Occupancy Types within the Project.

B. Project Scope
1. Enter the Electrical Service Designation/Description.
2. Scope of Work: Select from dropdown.
3. Enter the kVA Rating.
4. Check if the Utility Provided Metering System meets Exception to §130.5(a)/§160.6(a)3.
5. Check if the System is subject to CA Elec Code Article 517 Exception to §130.5(a)&(b).
6. Demand Response Controls static text.
7. Check if power is provided to dwelling units/common living areas only in a multifamily occupancy.

C. Compliance Results
1. Results in this table are automatically calculated from data input and calculations in Tables F through J.

D. Exceptional Conditions
1. This table is auto-filled with uneditable comments because of selections made or data entered in tables throughout the form.

E. Additional Remarks
1. Enter any notes or comments for the AHJ.

F. Service Electrical Metering
1. This field is filled out automatically.
2. This field is filled out automatically.
3. Instantaneous Demand checkbox is always checked.
   Historical Peak Demand checkbox is checked automatically.
   Tracking kWh for user-defined period checkbox is always checked.
   kWh per rate period is checked automatically.
4. Enter the Location of Requirements in Construction Documents.
5. This is a Pass or Fail checkbox for the field inspector.

G. Separation of Electrical Circuits for Energy Monitoring
1. Load Type per Table 130.5-B: Select from dropdown.
2. This field is filled out automatically.
3. Compliance Method: Select from dropdown.
4. Enter the Location of Requirements in the Construction Documents.
5. This is a Pass or Fail checkbox for the field inspector.

H. Voltage Drop
1. This field is filled out automatically.
2. Select the Combined Voltage Drop on Installed Feeder/Branch Circuit Conductors Compliance Method.
3. Location of Voltage Drop Calculation: Select from dropdown.
4. Enter the Sheet Number for Voltage Drop Calculation in Construction Documents.
5. This is a Pass or Fail checkbox for the field inspector.

I. Circuit Controls for 120-Volt Receptacles and Controlled Receptacles
1. Enter the Room Name or Description.
2. Location/Type of Controlled Receptacles: Select from dropdown.
3. Shut-Off Controls: Select from dropdown.
4. Demand Responsive Controls: Select from dropdown.
5. Check if a Permanent Durable Marking Will be Used.
6. Enter the Location of Requirements in the Construction Documents.
7. This is a Pass or Fail checkbox for the field inspector.

J. Electric Ready Buildings
1. Select the applicable systems serving multifamily occupancy that use gas or propane.
2-8. Check Yes to verify your project meets the requirements.

K. Declaration of Required Certificates of Installation
Selections have been automatically made based on information provided in this document. If any selections have been changed by the permit applicant, an explanation should be included in Table E. Additional Remarks.

L. Declaration of Required Certificates of Acceptance

Selections have been made based on information provided in this document. If any selections have been changed by the permit applicant, an explanation should be included in Table E. Additional Remarks.

Documentation Declaration Statements
1. The person who prepared the NRCC will sign and complete the fields for their name, company (if applicable), address, phone number, certification information (if applicable), date and signature.
2. The person who is assuming responsibility for the project being built to comply with Title 24, Part 6, will complete the fields for their name, company (if applicable), address, phone number, license number (if applicable), date and signature.

AMS American Modular Systems — Gen7 healthy schools, delivered

April 30, 2023

DSA
Division of the State Architect
5100 Q street
Sacramento, CA 95811

This letter is in regards to the 2022 Energy/CALGreen Code DSA Plan Review, **2022 CBC - AMS PC Submissions.**

American Modular Systems (AMS) shall conform their on-site construction practices to comply with the required construction waste management practices illustrated in the Part 11, Title 24 California Green Building Code (CDC). The intent of this letter is to inform, illustrate, and demonstrate that AMS and its buildings comply to the following applicable code section illustrated below:

2022 California Green Building Code (CGC) – (Part 11, Title 24, CCR)

- ***Section 5.408.1 – Construction Waste Management***
  If the construction waste management takes place in the factory, provide program specifics to CALGreen plan reviewer which identifies:
  1. Percentage of waste to be salvaged or recycled with a minimum of 65% of nonhazardous construction waste.
  2. Procedures for waste management reporting.
  3. Type of waste to be diverted.
  4. If sorted or bulk mixed
  5. If handled by a waste management company or a diversion facility.
  6. If calculated by weight or volume.

AMS shall comply to this section by the following procedure & practice:
1. AMS shall be responsible for the organization and management of construction waste on the factory site, including the responsibility of recycling waste that is a minimum of 65% of non-hazardous construction waste.
2. AMS shall order rental waste & recycling bin(s) from a licensed and authorized waste management company from the City of Manteca, or equivalent in that matter. Upon approval, the bin(s) shall be dropped off on factory site by hired waste management company. As the bin(s) reach full capacity of construction waste, AMS schedules a pick-up for the bin(s) and is given invoice receipts from the waste management company.
3. AMS shall station the bin(s) whereas needed for AMS plant workers to salvage and/or recycle construction waste during the work day. **Each bin is labeled to help sort the different types of construction waste (e.g. Wood, Scrap Metal, Glass, Leather).**
4. AMS plant workers and management are responsible for **sorting** each bin with the correct types of construction waste listed above.
5. The invoice provided by the **hired waste management company** provides a description of the bin(s) and additional information.
6. Invoice receipts provides calculated **weights** of each bin & pricing of rental usage.

The PC plans and specifications will not reflect and show these procedures for any project.
Any questions regarding the construction waste management procedures,
please feel free to contact AMS's office.

Thank you,

Randall P. Cavanagh

LICENSED ARCHITECT RANDALL PATRICK CAVANAGH No. C12631 Ren. 03-31-25 STATE OF CALIFORNIA

American Modular Systems, Inc., 787 Spreckels Ave. Manteca, California 95336, Ph: 209 825 1921 Fax: 209 825 7018
www.americanmodular.com

IDENTIFICATION STAMP
DIV. OF THE STATE ARCHITECT
APP: 02-122533 INC:
REVIEWED FOR
SS ☑ FLS ☑ ACS ☑
DATE: 05/22/2024

American Modular Systems
787 Spreckels Ave., Manteca, CA 95336
Phone (209) 825-1921 Fax (209) 825-7018
www.americanmodular.com

INTELLECTUAL-PROPERTY & PROPRIETARY RIGHTS STATEMENT
COPYRIGHT © AMERICAN MODULAR SYSTEMS (AMS)
AMS OWNS ALL COPYRIGHT AND OTHER INTELLECTUAL-PROPERTY AND PROPRIETARY RIGHTS IN THESE DRAWINGS, SPECIFICATIONS, AND THE MATERIAL CONTAINED HEREIN. CERTAIN ELEMENTS SHOWN IN THESE DOCUMENTS ARE REGISTERED TRADEMARKS OF AMS. ALL PATENTABLE MATERIALS CONTAINED IN THESE DOCUMENTS AND ORIGINATING WITH AMS WILL REMAIN THE SOLE PROPERTY OF AMS. THESE DRAWING, SPECIFICATIONS AND THE MATERIAL CONTAINED HEREIN MAY NOT BE REPRODUCED, TRANSMITTED, COPIED, DISTRIBUTED, MODIFIED, OR OTHERWISE DISPOSED OF (DIRECTLY OR INDIRECTLY) AND MAY NOT BE USED (IN WHOLE OR IN PART) TO ASSIST IN THE CONSTRUCTION, DESIGN, OR OTHER MAKING OF, OR FOR THE PURPOSE OF FURNISHING ANY INFORMATION FOR THE CONSTRUCTION, DESIGN, OR OTHER MAKING OF, ANY BUILDINGS (MODULAR OR OTHERWISE), DRAWINGS, SPECIFICATIONS, PRINTS, APPARATUS, OR PARTS THEREOF, EXCEPT AS EXPRESSLY PERMITTED BY WRITTEN CONSENT OF, OR IN A WRITTEN AGREEMENT WITH, AMS. SUBMITTAL OR DISTRIBUTION TO MEET OFFICIAL REGULATORY REQUIREMENTS WILL NOT BE CONSTRUED AS PUBLICATION IN DEROGATION OF AMS'S COPYRIGHT OR OTHER INTELLECTUAL-PROPERTY OR PROPRIETARY RIGHTS.

PRE-CHECKED SET NAME
30' x 32' THRU 60' x 32'
2GO

SITE SPECIFIC PROJECT NAME
.
.
.

APPROVED
DIV. OF THE STATE ARCHITECT
APP: 04-122041 PC
REVIEWED FOR
SS ☑ FLS ☑ ACS ☑ CG ☑
DATE: 04/05/2024

☐ 2022 CBC PRE-CHECK (PC) DOCUMENT
A SEPARATE PROJECT APPLICATION FOR CONSTRUCTION IS REQUIRED

MANUFACTURER PROFESSIONAL OF RECORD ON PC

LICENSED ARCHITECT RANDALL PATRICK CAVANAGH No. C12631 Ren. 3-31-25 STATE OF CALIFORNIA

THESE DRAWINGS ARE PRELIMINARY AND NOT FOR CONSTRUCTION UNLESS STAMPED & SIGNED BY THE DESIGN PROFESSIONAL OF RECORD.

REVISIONS
1
2
3
4

DRAWN BY:	A.A.
SCALE:	AS NOTED
DATE:	DD/MM/YY
PROJECT NO:	XXXX-XX

SHEET TITLE:
ENERGY CALCULATIONS
- SUPPLEMENTAL SHEETS

SHEET NUMBER:
EN.39

CLASSROOM FLOOR PLAN

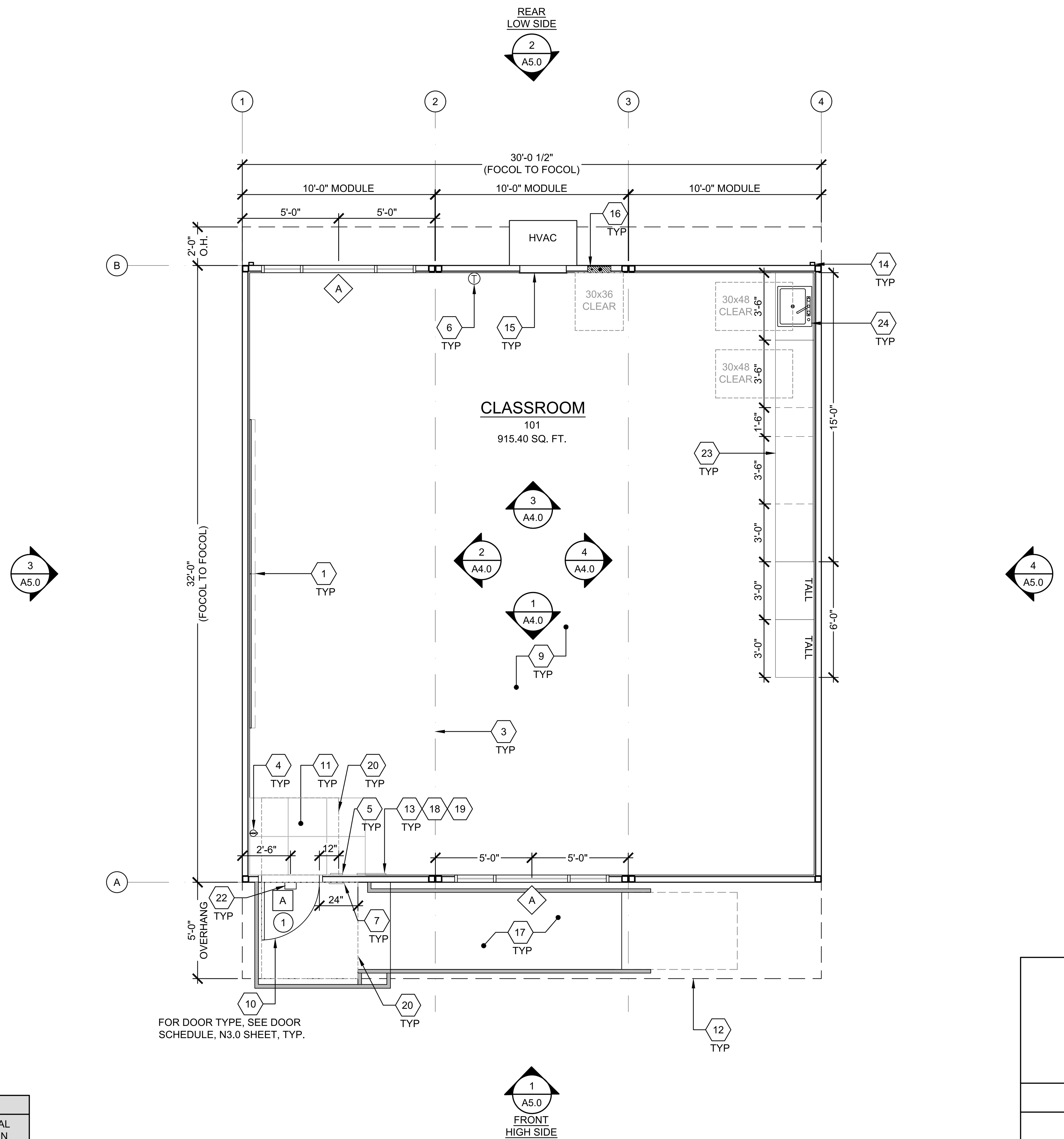

BUILDING SIZE SCHEDULE			
BUILDING SIZE	TOTAL # OF 10'-0" WIDE MODULES	TOTAL # OF CENTER MODULES	TOTAL FNDN WIDTH
☒ 30'x32'	3	1	30'-0¾"
☐ 40'x32'	4	2	40'-1"
☐ 50'x32'	5	3	50'-1¼"
☐ 60'x32'	6	4	60'-1½"

CLASSROOM FLOOR PLAN — SCALE: 1/4" = 1'-0" — A

1	(1) 16'x4' MARKER BOARDS - SEE SHEET A4.0
2	NOT USED
3	TYP. MOD LINE
4	FIRE EXTINGUISHER - TOP OF HANDLE @ +48" A.F.F. 4" MAX PROTRUSION FROM WALL IF BOTTOM OF FIRE EXTINGUISHER IS ABOVE 27" A.F.F. - SEE 19/N4.0
5	TACTILE EXIT SIGN PER DETAIL 10/N4.0 - "EXIT RAMP DOWN" SIGN WHEN RAMP IS BEING USED (BY OTHERS)
6	THERMOSTAT - TOP @ 46" A.F.F. - SEE ELECTRICAL SHEETS
7	ROOM SIGNAGE AND I.S.A. PER DETAILS 5&9/N4.0 (BY OTHERS)
8	NOT USED
9	CARPET - SEE N3.0
10	EGRESS DOOR
11	NON-ABSORBENT FLOOR AREA (2'-0" MIN. IN ALL DIRECTIONS @ ALL ENTRY DOOR) CHANGES IN LEVEL ARE NOT PERMITTED IN DOOR MANEUVERING CLEARANCE NON-ABSORBENT MATERIAL SHALL BE FLUSH WITH CARPET - SEE DETAIL 14/N4.0 (11B-404.2.4). - WALK-OFF TILES MAT
12	OVERHANG
13	OCCUPANT LOAD SIGN PER DETAIL 11/N4.0 (BY OTHERS)
14	DOWNSPOUT - DISCHARGE TO SPLASH BLOCK (U.O.N.) (QUANTITY AND LOCATION MAY VARY)
15	HVAC - SEE EXTERIOR ELEVATIONS & MECHANICAL SHEET NOTES
16	ELECTRICAL PANEL (LOCATION MAY VARY)
17	TYPICAL RAMP - REFER TO DETAIL 16/-.
18	FLOOR LIVE LOAD SIGN PER 2022 CBC SECTION 106.1 PROVIDED BY OTHERS. *(FLOOR LIVE LOAD SIGN IS REQUIRED ONLY FOR COMMERCIAL OR INSTITUTIONAL BUILDINGS DESIGNED WITH LIVE LOADS EXCEEDING 50 PSF)*
19	ASSISTIVE LISTENING (AL) SIGN POSTED IN PROMINENT PLACE AT OR NEAR THE ENTRANCE PER 17/N4.0.
20	ADA MANEUVERING CLEARANCES AT DOORS
21	NOT USED
22	EXTERIOR LIGHT - SEE ELECTRICAL
23	CASEWORK - AMS TO PROVIDE BLOCKING AS REQUIRED PER A7.1
24	CASEWORK w/SINK - REFER TO DETAIL 17/-. AMS TO PROVIDE BLKG AS REQ PER A7.1

KEY NOTES

1. ~~REFER TO SHEETS N5.0 FOR POSSIBLE ADDITIONAL FLOOR PLAN CONFIGURATIONS.~~
2. ~~OPTIONAL INTERIOR WALLS MAY OCCUR THROUGHOUT THE BUILDING AS CONSTRUCTED PER SHEET S8.1. THE PC TITLE 24 HAS BEEN RUN FOR THE WORST CASE ENVELOPE BASED ON AREA.~~
3. ~~PANIC HARDWARE COMPLYING WITH C.B.C. 1010.2.9 IS REQUIRED TO BE INSTALLED WHEN THE CONFIGURATION OF ANY ROOM PROVIDES AN OCCUPANT LOAD OF 50 OR GREATER.~~
4. ~~IF OCCUPANCY LOAD EXCEEDS 50, PROVIDE A SECOND EXIT DOOR, PER CBC TABLE 1006.2.1.~~
5. FOR ROOMS OR SPACES CLASSIFIED AS AN ASSEMBLY OCCUPANCY, PROVIDE AN OCCUPANT LOAD SIGN (BY OTHERS) IN A CONSPICUOUS PLACE, NEAR THE MAIN EXIT, PER C.B.C. SECTION 1004.9.
6. ALL PRIMARY EXTERIOR DOOR ENTRIES SHALL BE COVERED TO PREVENT WATER INTRUSION BY USING NONABSORBENT FLOOR AND WALL FINISHES WITHIN AT LEAST 2 FEET AROUND AND PERPENDICULAR TO OPENING, PER CALGREEN, SECTION 5.407.2.2.1.
7. PRIMARY EXTERIOR DOOR ENTRIES SHALL HAVE AT LEAST ONE OF THE FOLLOWING:
   - INSTALLED AWNING AT LEAST 4 FEET IN DEPTH (BY OTHERS).
   - ROOF OVERHANG AT LEAST 4 FEET IN DEPTH.
   - DOOR RECESSED AT LEAST 4 FEET.
   - OTHER METHODS WHICH PROVIDE EQUIVALENT PROTECTION (BY OTHERS).
8. WINDOW PLACEMENT & SIZE MAY VARY. THE WINDOW GLASS SHALL NOT EXCEED THE AREA LISTED IN THE WINDOW GLAZING AREA TABLE IN SHEET N3.0
9. CABINETRY MAY BE INSTALLED ON ONE OR BOTH SIDES OF THE INTERIOR WALLS AND THE INSIDE FACE OF EXTERIOR WALLS WHEN INSTALLED PER THE DETAIL 8/A7.1.
10. IF FIRE RATED WALLS ARE REQUIRED DUE TO SITE SPECIFIC REQUIREMENTS, REFER TO DETAILS IN SHEET A8.0 FOR 1-HR RATED DETAILS

WALL LEGEND

(NO HATCH) — 2X4 WALLS

SYMBOLS LEGEND

- X/# = MECHANICAL OR PLUMBING FIXTURE - SEE MECHANICAL OR PLUMBING DRAWINGS
- X = KEY NOTE - SEE KEY NOTES ABOVE
- X = DOOR TYPE - SEE SCHEDULE, SHEET N3.0
- X = DOOR HARDWARE - SEE HARDWARE SCHEDULE, SHEET N3.0
- X = WINDOW TYPE - SEE SCHEDULE, SHEET N3.0

SHEET NOTES

RAMP PLAN

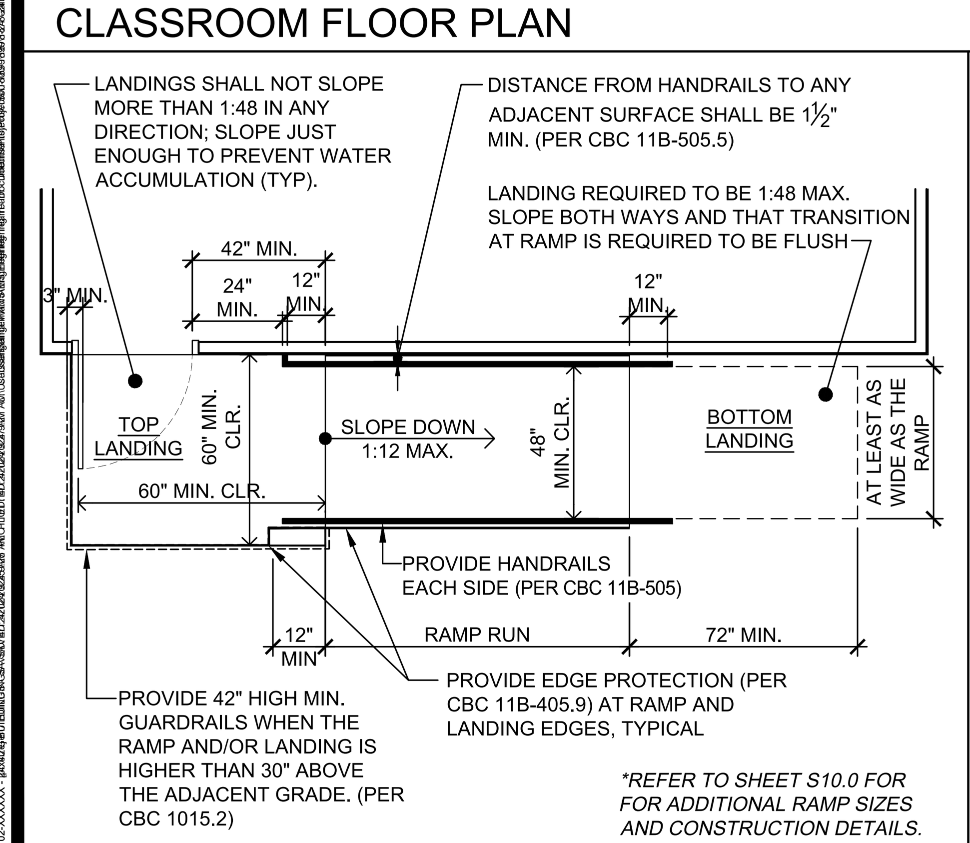

**REFER TO SHEET S10.0 FOR FOR ADDITIONAL RAMP SIZES AND CONSTRUCTION DETAILS.*

RAMP PLAN — SCALE: 1/4" = 1'-0" — 16

CLASSROOM SINK

IN-ROOM SINK OPTION
BASE CABINET WITH SOLID SURFACE OR PLASTIC LAMINATE COUNTERTOP AND SINK. CABINET SHALL HAVE PLASTIC LAMINATE FINISH.
CABINET WITH SINK SHALL BE ACCESSIBLE - SEE DETAIL 12/P2.0.

FOR SINK HEIGHT & DIMENSIONS, SEE DETAIL 8/P2.0.

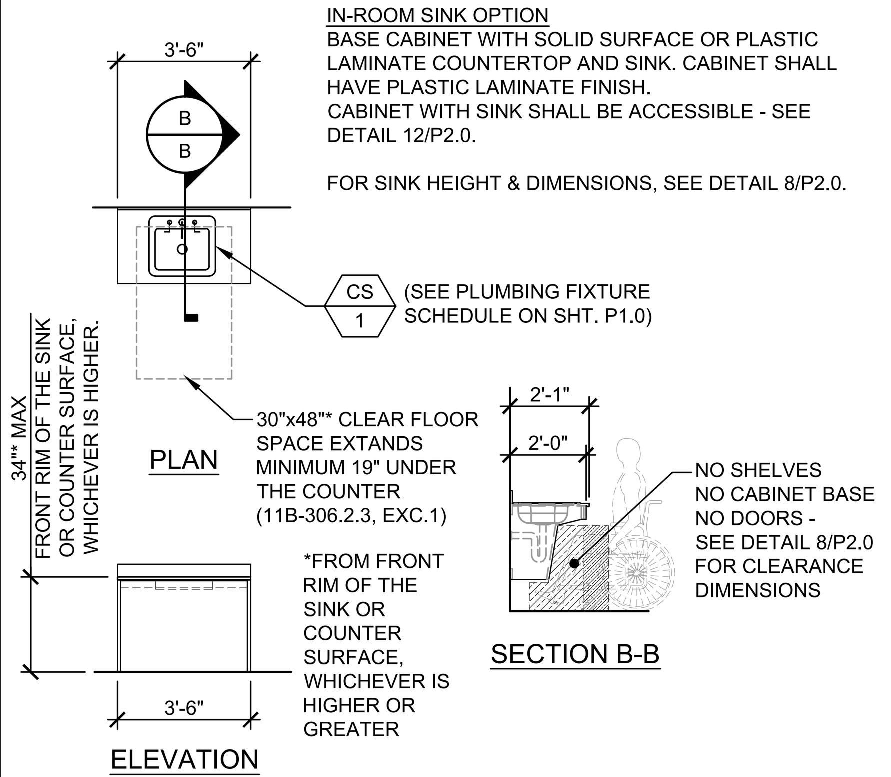

CLASSROOM SINK — SCALE: 1/4" = 1'-0" — 17

ENERGY CONTROLS

1. DEMAND RESPONSE CONTROLS:
   ONLY REQUIRED IN BUILDINGS LARGER THAN 10,000 S.F., THEREFORE, NOT REQUIRED FOR THIS PC.
2. AUTOMATIC DAYLIGHTING CONTROLS:
   NOT REQUIRED IN ROOMS WHERE COMBINED INSTALLED LIGHTING POWER IN COMBINED SKYLIT & PRIMARY DAYLIT ZONES ARE <120 WATTS. INSTALLED WATTAGE IN PRIMARY SIDELIT DAY LIT ZONE IS 90 WATTS (2x 45w, AS SHOWN ON SHEET E1.0). THEREFORE, AUTOMATIC DAYLIGHTING CONTROLS ARE NOT REQUIRED.
3. ENERGY MANAGEMENT CONTROL SYSTEM (EMCS) CONNECTION:
   PER TITLE 24 CODE, "AN EMCS MAY BE INSTALLED TO COMPLY WITH THE REQUIREMENTS OF ONE OR MORE LIGHTING CONTROLS IF IT MEETS THE MINIMUM REQUIREMENTS". PC MAY CONTAIN OCCUPANCY SENSORS AND PHOTOCELL CONTROL LIGHTING, IN THAT CASE, AN EMCS IS NOT REQUIRED FOR THIS PC.
4. SOLAR-READY ZONE REQUIREMENTS:
   REQUIREMENTS & TABLE CAN BE FOUND ON SHEET A2.0

NOTE:
ANY MONITORING EQUIPMENT OR ASSOCIATED SENSORS ARE SITE SPECIFIC AND ARE NOT INCLUDED IN THE BASE PC.

ENERGY NOTES

ACOUSTIC CONTROLS

1. WHEN THE PRE-CHECK (PC) BUILDING IS SITE ADAPTED, THE BUILDING AND SITE FEATURES SHALL COMPLY WITH THE CALGREEN CODE, SECTION 5.507.4, FOR THE SPECIFIC SITE LOCATION.
2. MINIMUM WALL ASSEMBLIES:
   WALL ASSEMBLIES SHALL BE CONSTRUCTED PER DETAIL SHEETS A5.1, A5.3, & A8.0, WITH EITHER 2x4 WOOD STUDS.
   MINIMUM STC RATINGS LISTED BELOW ARE PER THE CATALOG OF STC & IIC RATINGS FOR WALL AND FLOOR/CEILING ASSEMBLIES, PRODUCED BY THE OFFICE OF NOISE CONTROL, CA DEPARTMENT OF HEALTH SERVICES.

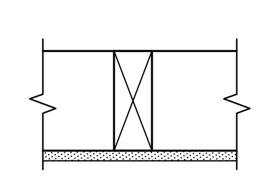

(1) LAYER 1/2" GYPSUM BOARD SECURED TO MIN. 2x4 STUDS @ 16" O.C. MAX.

STC=28
(CATALOG SECTION 1.2.1.5.4.1)
TEST REF.: NATIONAL RESEARCH COUNCIL OF CANADA - NRC #66

3. IN THE EVENT THAT A PC CLASSROOM IS DESIGNED TO CONNECT TO ANOTHER PC CLASSROOM OR RESTROOM, INTERIOR SOUND TRANSMISSION IN THE INTERIOR ADJOINING WALL AND FLOOR/CEILING SHALL MEET THE MINIMUM REQUIREMENT OF A STC OF 40, PER CALGREEN CODE SECTION 507.4.3. (EXAMPLES OF QUALIFYING ASSEMBLIES SHOWN BELOW).

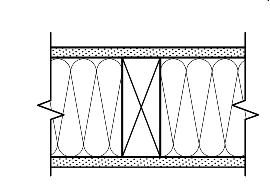

(2) LAYER 5/8" GYPSUM BOARD SECURED TO MIN. 2x4 STUDS @ 24" O.C. MAX. w/ 3½" THK. BATT INSULATION

STC=40
TEST REF.: AUDIO ALLOY L.L.C TEST NUMBER: OL-05-1003

4. MINIMUM WINDOW & DOOR RATINGS:
   ALL WINDOWS AND DOORS SPECIFIED ON THE SCHEDULES FOUND ON SHEET N3.0 OF THIS PACKAGE SHALL MEET A MINIMUM STC RATING OF 27.

ACOUSTIC NOTES

IDENTIFICATION STAMP
DIV. OF THE STATE ARCHITECT
APP: 02-122533 INC:
REVIEWED FOR
SS ☑ FLS ☑ ACS ☑
DATE: 05/22/2024

American Modular Systems
787 Spreckels Ave., Manteca, CA 95336
Phone (209) 825-1921 Fax (209) 825-7018
www.americanmodular.com

INTELLECTUAL-PROPERTY & PROPRIETARY RIGHTS STATEMENT
COPYRIGHT © AMERICAN MODULAR SYSTEMS (AMS)
AMS OWNS ALL COPYRIGHT AND OTHER INTELLECTUAL-PROPERTY AND PROPRIETARY RIGHTS IN THESE DRAWINGS, SPECIFICATIONS, AND THE MATERIAL CONTAINED HEREIN. CERTAIN ELEMENTS SHOWN IN THESE DOCUMENTS ARE REGISTERED TRADEMARKS OF AMS. ALL PATENTABLE MATERIALS CONTAINED IN THESE DOCUMENTS AND ORIGINATING WITH AMS WILL REMAIN THE SOLE PROPERTY OF AMS. THESE DRAWING, SPECIFICATIONS, AND THE MATERIAL CONTAINED HEREIN MAY NOT BE REPRODUCED, TRANSMITTED, COPIED, DISTRIBUTED, MODIFIED, OR OTHERWISE DISPOSED OF (DIRECTLY OR INDIRECTLY) AND MAY NOT BE USED (IN WHOLE OR IN PART) TO ASSIST IN THE CONSTRUCTION, DESIGN, OR OTHER MAKING OF, OR FOR THE PURPOSE OF FURNISHING ANY INFORMATION FOR THE CONSTRUCTION, DESIGN, OR OTHER MAKING OF, ANY BUILDINGS (MODULAR OR OTHERWISE), DRAWINGS, SPECIFICATIONS, PRINTS, APPARATUS, OR PARTS THEREOF, EXCEPT AS EXPRESSLY PERMITTED BY WRITTEN CONSENT OF, OR IN A WRITTEN AGREEMENT WITH, AMS. SUBMITTAL OR DISTRIBUTION TO MEET OFFICIAL REGULATORY REQUIREMENTS WILL NOT BE CONSTRUED AS PUBLICATION IN DEROGATION OF AMS'S COPYRIGHT OR OTHER INTELLECTUAL-PROPERTY OR PROPRIETARY RIGHTS.

PRE-CHECKED SET NAME
30' x 32' THRU 60' x 32'
2GO®

SITE SPECIFIC PROJECT NAME
GALT JOINT UESD
VERNON GREER ES
(2) 30'X32' BUILDINGS

MANUFACTURER PROFESSIONAL OF RECORD ON PC

THESE DRAWINGS ARE PRELIMINARY AND NOT FOR CONSTRUCTION UNLESS STAMPED & SIGNED BY THE DESIGN PROFESSIONAL OF RECORD.

REVISIONS

1	
2	
3	
4	

DRAWN BY:	A.V.
SCALE:	AS NOTED
DATE:	01/04/24
PROJECT NO:	1878-24

SHEET TITLE:
CLASSROOM
FLOOR PLAN

SHEET NUMBER:
A1.0

REAR

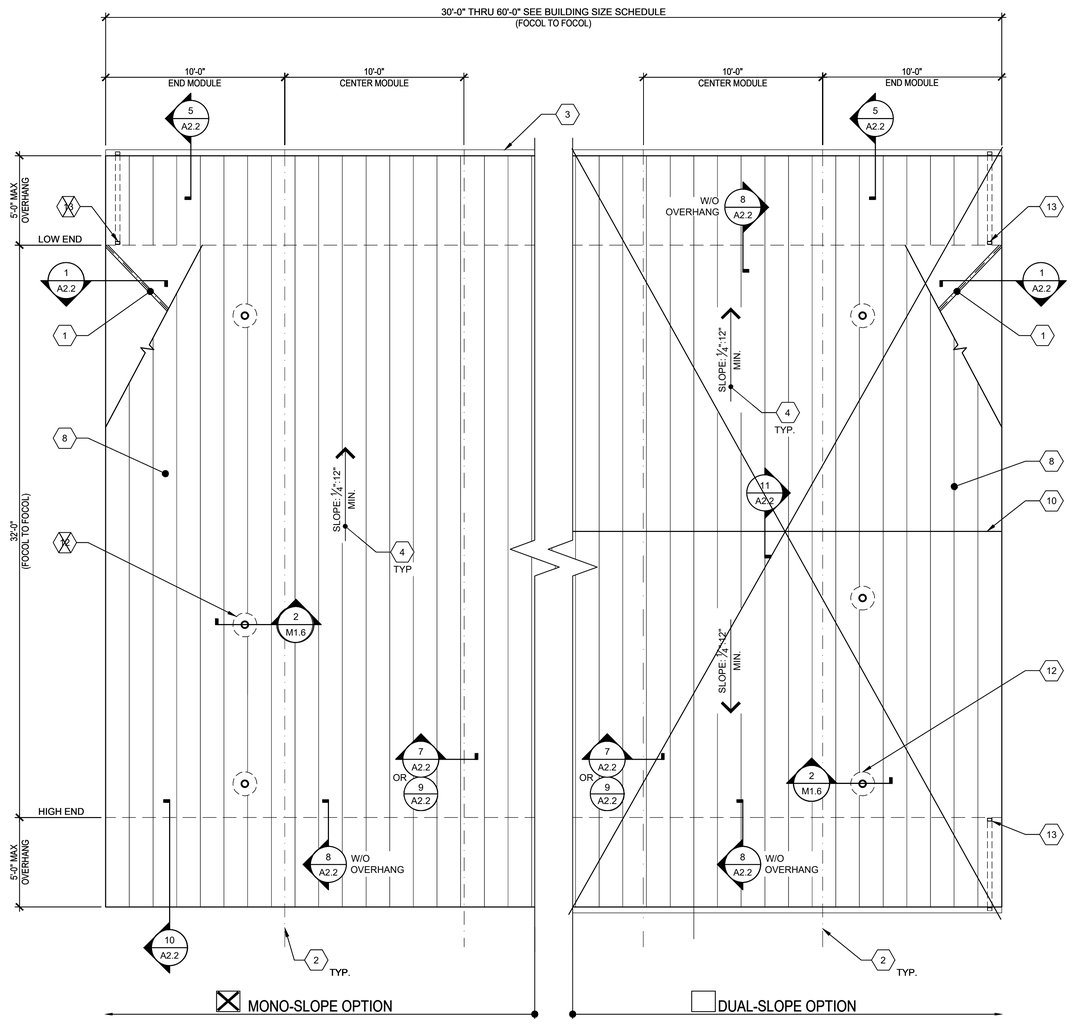

FRONT

TYPICAL ROOF PLAN

SCALE: 1/4" = 1'-0" | 1

1. ROOF STRAP CROSS BRACING PER SHEET S4.0.
2. TYPICAL MOD LINE
3. OPTIONAL GUTTER PER DETAIL 5/A2.2
4. TYPICAL ROOF SLOPE
5. ~~SOLAR READY AREA~~
6. STANDING SEAM METAL ROOF CLASS B PER 7/S0.0 & DETAILS ON SHEET A2.2
7. RIDGE @ DUAL SLOPE OPTION
8. ~~PIPE VENT PER PLUMBING PLANS & 2/M1.6~~
9. OPTIONAL DOWNSPOUT - SEE ROOF DRAIN SCHEDULE BELOW FOR MIN. # OF DRAINS.

KEY NOTES

1. OPTIONAL GUTTERS SHALL BE LOCATED ALONG THE END-WALLS OF THE BUILDING(S):
   - MONO-SLOPE: REAR END WALLS ONLY.
   - DUAL-PITCH: BOTH FRONT & REAR END WALLS.

SHEET NOTES

SOLAR ZONE REQUIRED, PER TITLE 24 SECTION 110.10: FOR NON-RESIDENTIAL BUILDINGS, 3 STORIES OR LESS, A MINIMUM OF 15% OF ROOF AREA (EXCLUDING SKYLIGHTS) MUST BE SET ASIDE FOR PHOTO-VOLTAICS (PV). THE ROOF MUST HAVE NO ROOF OBSTRUCTIONS.

1. REQUIRED SOLAR-READY ZONE, AREA PER THE CHART BELOW, MUST BE PROVIDED ON BUILDING ROOF.
2. ZONE MUST BE LEFT VOID OF ROOF-MOUNTED HVAC UNITS, SKYLIGHTS OR OTHER OBSTRUCTIONS THAT WOULD HINDER FUTURE INSTALLATION OF SOLAR SYSTEM COMPONENTS, INCLUDING PV PANELS.
3. TOTAL AREA REQUIRED FOR SOLAR-READY ZONE DOES NOT NEED TO BE LOCATED IN ONE AREA BUT CAN BE SPREAD OUT OVER ROOF.
4. SOLAR-READY ZONE SHALL NOT INCLUDE ROOF OVERHANGS, AND SOLAR SYSTEM COMPONENTS MAY NOT BE PLACED THERE.
5. THE ROOF STRUCTURE HAS BEEN DESIGNED PER THE DESIGN LOADS SPECIFIED ON SHEET TS, WHICH DOES INCLUDE LOADS FROM SOLAR EQUIPMENT THAT MIGHT BE INSTALLED AT A LATER DATE.
6. EQUIPMENT SUCH AS SOLAR MODULES, INVERTERS, AND METERING EQUIPMENT DO NOT NEED TO BE INSTALLED, NOR DOES CONDUIT, PIPING, OR PRE-INSTALLED MOUNTING HARDWARE.
7. A STRUCTURAL ENGINEER SHOULD BE CONSULTED PRIOR TO ANY FUTURE SOLAR INSTALLATIONS TO DETERMINE THE ADEQUACY OF THE ROOF FRAMING TO SUSTAIN THE LOADS OF THE INSTALLATION ON THE BUILDING STRUCTURE.
8. A SEPARATE DSA APPLICATION NUMBER IS REQUIRED FOR DESIGN & INSTALLATION OF THE SOLAR PANEL SYSTEM, ITS ANCHORAGE & ROOF SUPPORT STRUCTURE.

REQUIRED SOLAR-READY ZONE

BUILDING SIZE	MAX. ROOF AREA (SQ. FT.)	REQ'D ZONE AREA (SQ. FT.)	*CLIMATE ZONE GROUP(S)
☒ 30'x32'	960	0	N/A
☐ 40'x32'	1280	0	N/A
☐ 50'x32'	1600	0	N/A
☐ 60'x32'	1920	288	D

GROUP D: CLIMATE ZONES 14, 15

ROOF AREA DRAINS (WITH 5'+2' OVERHANG)

BUILDING SIZE (NOM.)	ROOF AREA	MINIMUM NO. OF DRAINS	SIZE OF DRAIN
☒ 30'x32'	1170	1	2x3
☐ 40'x32'	1560	1	2x3
☐ 50'x32'	1950	1	2x3
☐ 60'x32'	2340	1	2x3

NOTES:
1. DOWNSPOUTS & LEADERS PER C.P.C. 1106.1 AND TABLE 1101.12.
2. PC DOWNSPOUT SIZING BASED ON ROOF AREA AND MAX RAINFALL RATE OF 3" PER HOUR. SITE SPECIFIC BUILDING MAY UTILIZE LOCAL RAINFALL RATE--PROVIDE SITE RAINFALL RATE TO DETERMINE MINIMUM NUMBER OF DRAINS REQUIRED.

ROOF DRAIN SCHEDULE

BUILDING SIZE SCHEDULE

BUILDING SIZE	TOTAL # OF 10'-0" WIDE MODULES	TOTAL # OF CENTER MODULES	TOTAL FNDN WIDTH
☒ 30'x32'	3	1	30'-0¾"
☐ 40'x32'	4	2	40'-1"
☐ 50'x32'	5	3	50'-1¼"
☐ 60'x32'	6	4	60'-1½"

BUILDING SIZE SCHEDULE

NOT USED | 3

NOT USED | 4

SOLAR-READY ZONE REQUIREMENTS

IDENTIFICATION STAMP
DIV. OF THE STATE ARCHITECT
APP: 02-122533 INC:
REVIEWED FOR
SS ☑ FLS ☑ ACS ☑
DATE: 05/22/2024

American Modular Systems
787 Spreckels Ave., Manteca, CA 95336
Phone (209) 825-1921 Fax (209) 825-7018
www.americanmodular.com

INTELLECTUAL-PROPERTY & PROPRIETARY RIGHTS STATEMENT
COPYRIGHT © AMERICAN MODULAR SYSTEMS (AMS)
AMS OWNS ALL COPYRIGHT AND OTHER INTELLECTUAL-PROPERTY AND PROPRIETARY RIGHTS IN THESE DRAWINGS, SPECIFICATIONS, AND THE MATERIAL CONTAINED HEREIN. CERTAIN ELEMENTS SHOWN IN THESE DOCUMENTS ARE REGISTERED TRADEMARKS OF AMS. ALL PATENTABLE MATERIALS CONTAINED IN THESE DOCUMENTS AND ORIGINATING WITH AMS WILL REMAIN THE SOLE PROPERTY OF AMS. THESE DRAWING, SPECIFICATIONS AND THE MATERIAL CONTAINED HEREIN MAY NOT BE REPRODUCED, TRANSMITTED, COPIED, DISTRIBUTED, MODIFIED, OR OTHERWISE DISPOSED OF (DIRECTLY OR INDIRECTLY) AND MAY NOT BE USED (IN WHOLE OR IN PART) TO ASSIST IN THE CONSTRUCTION, DESIGN, OR OTHER MAKING OF, OR FOR THE PURPOSE OF FURNISHING ANY INFORMATION FOR THE CONSTRUCTION, DESIGN, OR OTHER MAKING OF, ANY BUILDINGS (MODULAR OR OTHERWISE), DRAWINGS, SPECIFICATIONS, PRINTS, APPARATUS, OR PARTS THEREOF, EXCEPT AS EXPRESSLY PERMITTED BY WRITTEN CONSENT OF, OR IN A WRITTEN AGREEMENT WITH, AMS. SUBMITTAL OR DISTRIBUTION TO MEET OFFICIAL REGULATORY REQUIREMENTS WILL NOT BE CONSTRUED AS PUBLICATION IN DEROGATION OF AMS'S COPYRIGHT OR OTHER INTELLECTUAL-PROPERTY OR PROPRIETARY RIGHTS.

PRE-CHECKED SET NAME

30' x 32' THRU 60' x 32'

2GO®

SITE SPECIFIC PROJECT NAME

.
.
.

APPROVED
DIV. OF THE STATE ARCHITECT
APP: 04-122041 PC
REVIEWED FOR
SS ☑ FLS ☑ ACS ☑ CG ☑
DATE: 04/05/2024

☐ 2022 CBC PRE-CHECK (PC) DOCUMENT
A SEPARATE PROJECT APPLICATION FOR CONSTRUCTION IS REQUIRED.

MANUFACTURER PROFESSIONAL OF RECORD ON PC

LICENSED ARCHITECT
PATRICK CHUNG HONG
No. C12631
Ren. 3-31-25
STATE OF CALIFORNIA

THESE DRAWINGS ARE PRELIMINARY AND NOT FOR CONSTRUCTION UNLESS STAMPED & SIGNED BY THE DESIGN PROFESSIONAL OF RECORD.

REVISIONS
1
2
3
4

DRAWN BY:	A.A.
SCALE:	AS NOTED
DATE:	DD/MM/YY
PROJECT NO:	XXXX-XX

SHEET TITLE:

TYPICAL ROOF PLAN
METAL STANDING SEAM

SHEET NUMBER:

A2.0

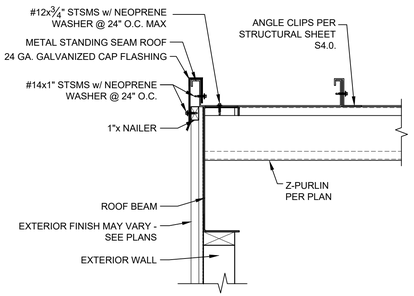

SEE SHEETS A5.0 & A5.2 FOR EXTERIOR FINISHES.

METAL ROOF w/ STRAPS SCALE : 1 1/2"=1'-0" | 1

NOT USED | 2

NOT USED | 3

NOT USED | 4

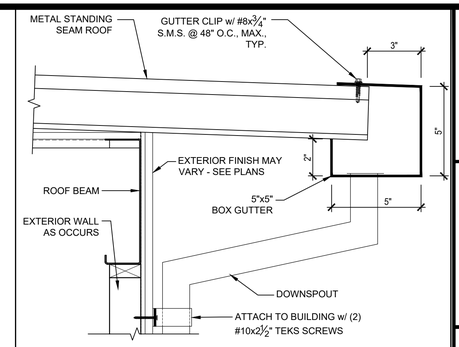

SEE DETAIL 8/- WITHOUT OVERHANG, GUTTER, & DOWNSPOUT OPTION.
SEE DETAIL 10/- WITH OVERHANG OPTION ONLY.

TYP. GUTTER ATTACHMENT SCALE : 1 1/2"=1'-0" | 5

NOT USED | 6

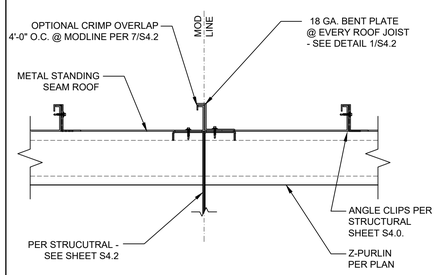

NOTE: SEE DETAIL 9/- FOR OPTIONAL MOD-LINE CONNECTION AT SEISMIC JOINT.

TYP. ROOF BEAM CONN. @ MODLINE SCALE : 1 1/2"=1'-0" | 7

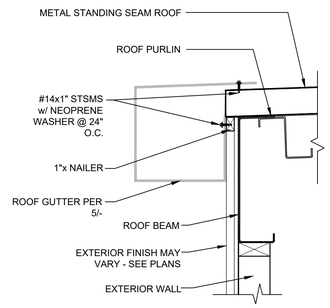

SEE DETAIL 5/- WITH OVERHANG, GUTTER, & DOWNSPOUT OPTION.
SEE DETAIL 10/- WITH OVERHANG OPTION ONLY.

METAL ROOF @ END WALLS (w/o OVERHANGS) SCALE : 1 1/2"=1'-0" | 8

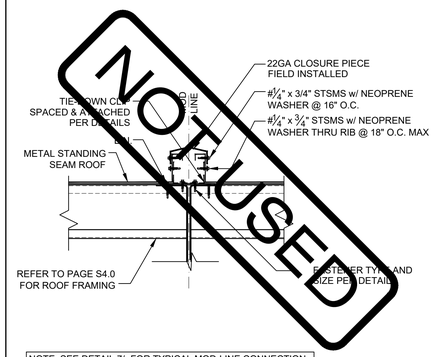

NOTE: SEE DETAIL 7/- FOR TYPICAL MOD-LINE CONNECTION.

METAL ROOF @ MODLINE OPTION SCALE : 1 1/2"=1'-0" | 9

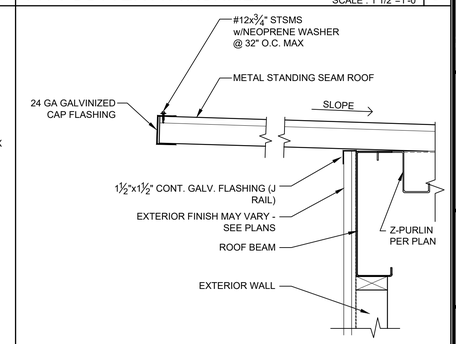

SEE DETAIL 5/- WITH OVERHANG, GUTTER, & DOWNSPOUT OPTION.
SEE DETAIL 8/- WITHOUT OVERHANG, GUTTER, & DOWNSPOUT OPTION.

METAL ROOF EDGE @ OVERHANG SCALE : 1 1/2"=1'-0" | 10

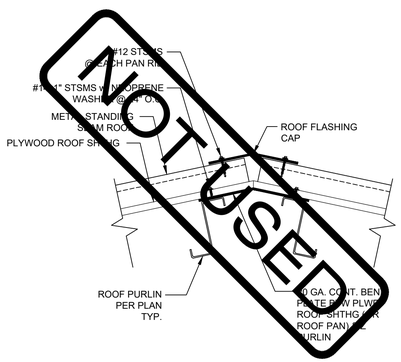

OPTIONAL METAL DUAL SLOPED SCALE: 1-1/2"=1'-0" | 11

NOT USED | 12

NOT USED | 13

NOT USED | 14

NOT USED | 15

NOT USED | 16

NOT USED | 17

NOT USED | 18

NOT USED | 19

NOT USED | 20

IDENTIFICATION STAMP
DIV. OF THE STATE ARCHITECT
APP: 02-122533 INC:
REVIEWED FOR
SS ☑ FLS ☑ ACS ☑
DATE: 05/22/2024

American Modular Systems
787 Spreckels Ave., Manteca, CA 95336
Phone (209) 825-1921 Fax (209) 825-7018
www.americanmodular.com

INTELLECTUAL-PROPERTY & PROPRIETARY RIGHTS STATEMENT
COPYRIGHT © AMERICAN MODULAR SYSTEMS (AMS)
AMS OWNS ALL COPYRIGHT AND OTHER INTELLECTUAL-PROPERTY AND PROPRIETARY RIGHTS IN THESE DRAWINGS, SPECIFICATIONS, AND THE MATERIAL CONTAINED HEREIN. CERTAIN ELEMENTS SHOWN IN THESE DOCUMENTS ARE REGISTERED TRADEMARKS OF AMS. ALL PATENTABLE MATERIALS CONTAINED IN THESE DOCUMENTS AND ORIGINATING WITH AMS WILL REMAIN THE SOLE PROPERTY OF AMS. THESE DRAWING, SPECIFICATIONS, AND THE MATERIAL CONTAINED HEREIN MAY NOT BE REPRODUCED, TRANSMITTED, COPIED, DISTRIBUTED, MODIFIED, OR OTHERWISE DISPOSED OF (DIRECTLY OR INDIRECTLY) AND MAY NOT BE USED (IN WHOLE OR IN PART) TO ASSIST IN THE CONSTRUCTION, DESIGN, OR OTHER MAKING OF, OR FOR THE PURPOSE OF FURNISHING ANY INFORMATION FOR THE CONSTRUCTION, DESIGN, OR OTHER MAKING OF, ANY BUILDINGS (MODULAR OR OTHERWISE), DRAWINGS, SPECIFICATIONS, PRINTS, APPARATUS, OR PARTS THEREOF, EXCEPT AS EXPRESSLY PERMITTED BY WRITTEN CONSENT OF, OR IN A WRITTEN AGREEMENT WITH, AMS. SUBMITTAL OR DISTRIBUTION TO MEET OFFICIAL REGULATORY REQUIREMENTS WILL NOT BE CONSTRUED AS PUBLICATION IN DEROGATION OF AMS'S COPYRIGHT OR OTHER INTELLECTUAL-PROPERTY OR PROPRIETARY RIGHTS.

PRE-CHECKED SET NAME

30' x 32' THRU 60' x 32'

2GO

SITE SPECIFIC PROJECT NAME

.
.
.

APPROVED
DIV. OF THE STATE ARCHITECT
APP: 04-122041 PC
REVIEWED FOR
SS ☑ FLS ☑ ACS ☑ CG ☑
DATE: 04/05/2024

☐ 2022 CBC PRE-CHECK (PC) DOCUMENT
A SEPARATE PROJECT APPLICATION FOR CONSTRUCTION IS REQUIRED.

MANUFACTURER PROFESSIONAL OF RECORD ON PC

LICENSED ARCHITECT
PATRICK C. DAWNY
No. C12631
Ren. 3-31-25
STATE OF CALIFORNIA

THESE DRAWINGS ARE PRELIMINARY AND NOT FOR CONSTRUCTION UNLESS STAMPED & SIGNED BY THE DESIGN PROFESSIONAL OF RECORD.

REVISIONS

1
2
3
4

DRAWN BY:	A.A.
SCALE:	AS NOTED
DATE:	DD/MM/YY
PROJECT NO:	XXXX-XX

SHEET TITLE:

TYPICAL ROOF DETAILS
METAL STANDING SEAM

SHEET NUMBER:

A2.2

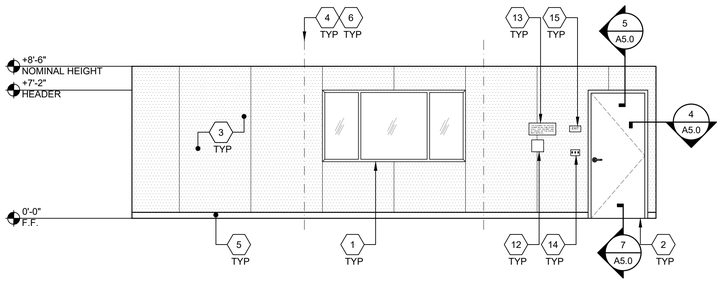

TYPICAL CLASSROOM FRONT END WALL ELEVATION SCALE : 1/4"=1'-0" 1

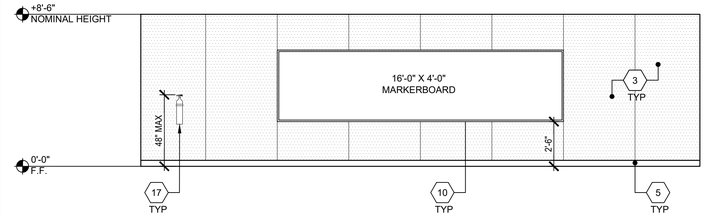

TYPICAL CLASSROOM SIDE WALL ELEVATION SCALE : 1/4"=1'-0" 2

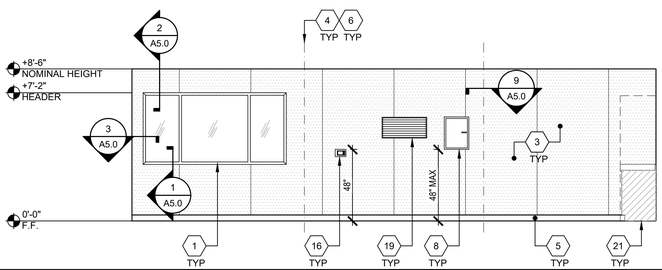

TYPICAL CLASSROOM REAR END WALL ELEVATION SCALE : 1/4"=1'-0" 3

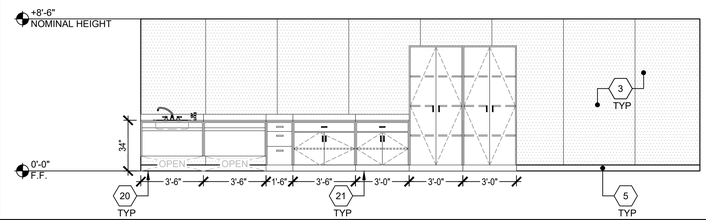

TYPICAL CLASSROOM SIDE WALL ELEVATION SCALE : 1/4"=1'-0" 4

NOT USED 5

NOT USED 6

NOT USED 7

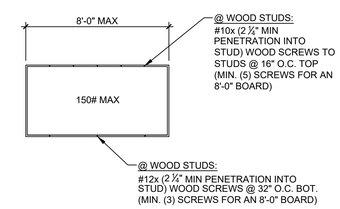

NOTE:
1. ATTACHMENT IS FOR EACH MARKERBOARD.
2. EACH WHITEBOARD SHALL PROTRUDE 4" MAX HORIZONTALLY INTO THE CIRCULATION PATH, PER CBC SECTION 11B-307.2.
3. EACH WHITEBOARD SHALL HAVE FASTENERS PROVIDED BY MANUFACTURER AS NOTED ABOVE.

MARKERBOARD ATT. DETAIL SCALE : 1/4"=1'-0" 8

NOT USED 9

NOT USED 10

NOT USED 11

NOT USED 12

1. WINDOW, SEE SPEC'S
2. TYP EXTERIOR DOOR
3. TACKBOARD - (FLAME RESISTANT INDUSTRIAL TACKABLE BOARD) - SHALL BE CLASS A RATED (ASTM E-84). NOMINAL PANEL THICKNESS SHALL BE ± 0.5" AND SHALL BE INSTALED IN ACCORDANCE WITH THE MANUFACTURER'S GUIDELINES.
4. TYP MOD LINE
5. TOP SET BASE
6. FULL PANEL CLOSE-UP AT MOD-LINES, TYP
7. NOT USED
8. ELECTRICAL PANEL - SEE ELECTRICAL SHEETS
9. NOT USED
10. (1) 16'x4' MARKER BOARDD - SEE DETAIL 8/A4.0
11. NOT USED
12. ASSISTIVE LISTENING SIGN, BY OTHERS, INSTALLED PER DETAIL 17/N4.0 SIGN SHALL BE A MAXIMUM OF 70" A.F.F. TO BASELINE OF HIGHEST TEXT.
13. OCCUPANT LOAD SIGN PER DETAIL 11/N4.0 (BY OTHERS)
14. LIGHT SWITCH - SEE ELECTRICAL SHEETS
15. EXIT TACTILE SIGN PER DETAIL 10/N4.0 (NIC)
16. THERMOSTAT, TOP @ 48" A.F.F. - SEE MECHANICAL SHEETS
17. FIRE EXTINGUISHER TOP OF HANDLE @ +48" MAX. A.F.F. PROTRUSION MAX 4" FROM WALL IF BOTTOM OF FIRE EXTINGUISHER MORE THAN THAN +27" A.F.F
18. TYP DUPLEX OUTLET - SEE ELECTRICAL SHEETS
19. HVAC GRILL
20. CASEWORK w/SINK - AMS TO PROVIDE BLOCKING AS REQUIRED PER A7.1
21. CASEWORK - AMS TO PROVIDE BLOCKING AS REQUIRED PER A7.1

KEY NOTES

IDENTIFICATION STAMP
DIV. OF THE STATE ARCHITECT
APP: 02-122533 INC:
REVIEWED FOR
SS ☑ FLS ☑ ACS ☑
DATE: 05/22/2024

AMS®
American Modular Systems
787 Spreckels Ave., Manteca, CA 95336
Phone (209) 825-1921 Fax (209) 825-7018
www.americanmodular.com

INTELLECTUAL-PROPERTY & PROPRIETARY RIGHTS STATEMENT
COPYRIGHT © AMERICAN MODULAR SYSTEMS (AMS)
AMS OWNS ALL COPYRIGHT AND OTHER INTELLECTUAL-PROPERTY AND PROPRIETARY RIGHTS IN THESE DRAWINGS, SPECIFICATIONS, AND THE MATERIAL CONTAINED HEREIN. CERTAIN ELEMENTS SHOWN IN THESE DOCUMENTS ARE REGISTERED TRADEMARKS OF AMS. ALL PATENTABLE MATERIALS CONTAINED IN THESE DOCUMENTS AND ORIGINATING WITH AMS WILL REMAIN THE SOLE PROPERTY OF AMS. THESE DRAWING, SPECIFICATIONS AND THE MATERIAL CONTAINED HEREIN MAY NOT BE REPRODUCED, TRANSMITTED, COPIED, DISTRIBUTED, MODIFIED, OR OTHERWISE DISPOSED OF (DIRECTLY OR INDIRECTLY) AND MAY NOT BE USED (IN WHOLE OR IN PART) TO ASSIST IN THE CONSTRUCTION, DESIGN, OR OTHER MAKING OF, OR FOR THE PURPOSE OF FURNISHING ANY INFORMATION FOR THE CONSTRUCTION, DESIGN, OR OTHER MAKING OF, ANY BUILDINGS (MODULAR OR OTHERWISE), DRAWINGS, SPECIFICATIONS, PRINTS, APPARATUS, OR PARTS THEREOF, EXCEPT AS EXPRESSLY PERMITTED BY WRITTEN CONSENT OF, OR IN A WRITTEN AGREEMENT WITH, AMS. SUBMITTAL OR DISTRIBUTION TO MEET OFFICIAL REGULATORY REQUIREMENTS WILL NOT BE CONSTRUED AS PUBLICATION IN DEROGATION OF AMS'S COPYRIGHT OR OTHER INTELLECTUAL-PROPERTY OR PROPRIETARY RIGHTS.

PRE-CHECKED SET NAME

30' x 32' THRU 60' x 32'

2GO®

SITE SPECIFIC PROJECT NAME

GALT JOINT UESD
VERNON GREER ES
(2) 30'X32' BUILDINGS

MANUFACTURER PROFESSIONAL OF RECORD ON PC

LICENSED ARCHITECT
ANDREW PATRICK O'SHEA
No. C12631
Ren. 3-31-25
STATE OF CALIFORNIA

THESE DRAWINGS ARE PRELIMINARY AND NOT FOR CONSTRUCTION UNLESS STAMPED & SIGNED BY THE DESIGN PROFESSIONAL OF RECORD.

REVISIONS

1
2
3
4

DRAWN BY:	A.V.
SCALE:	AS NOTED
DATE:	01/04/24
PROJECT NO:	1878-24

SHEET TITLE:

INTERIOR ELEVATIONS
TYPICAL CLASSROOM

SHEET NUMBER:

A4.0

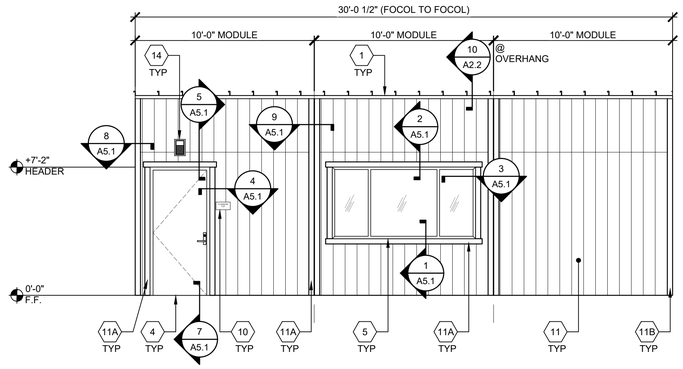

EXTERIOR ELEVATION - FRONT

SCALE : 1/4"=1'-0" | 1

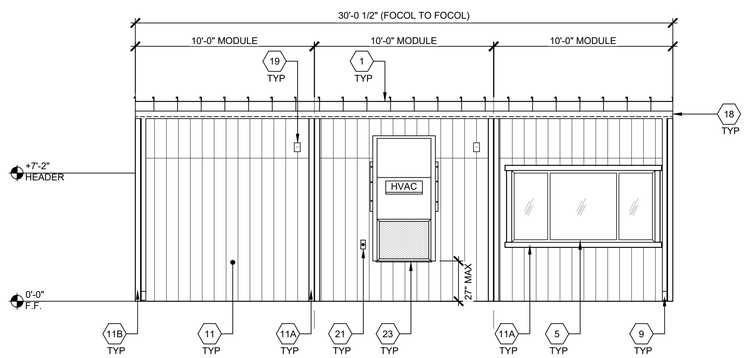

EXTERIOR ELEVATION - REAR

SCALE : 1/4"=1'-0" | 2

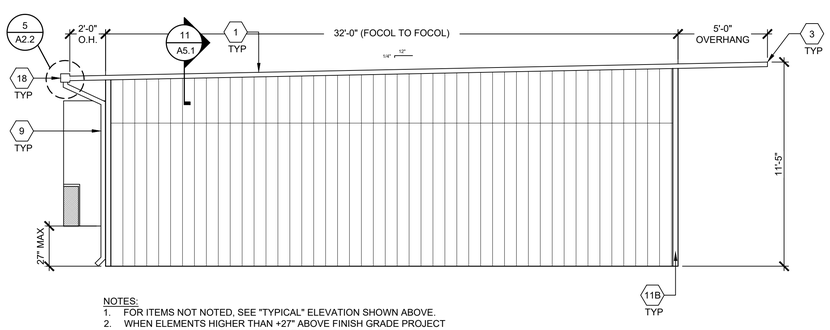

NOTES:
1. FOR ITEMS NOT NOTED, SEE "TYPICAL" ELEVATION SHOWN ABOVE.
2. WHEN ELEMENTS HIGHER THAN +27" ABOVE FINISH GRADE PROJECT MORE THAN 4" INTO CIRCULATION AREAS (INCLUDING GRASS PLAY AREAS), THAN CANE-DETECTION ELEMENTS WILL BE REQUIRED.

EXTERIOR ELEVATION - LEFT

SCALE : 1/4"=1'-0" | 3

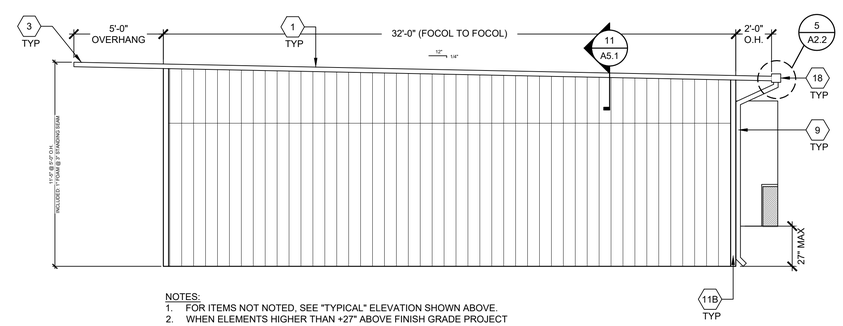

NOTES:
1. FOR ITEMS NOT NOTED, SEE "TYPICAL" ELEVATION SHOWN ABOVE.
2. WHEN ELEMENTS HIGHER THAN +27" ABOVE FINISH GRADE PROJECT MORE THAN 4" INTO CIRCULATION AREAS (INCLUDING GRASS PLAY AREAS), THAN CANE-DETECTION ELEMENTS WILL BE REQUIRED.

EXTERIOR ELEVATION - RIGHT

SCALE : 1/4"=1'-0" | 4

1. STANDING SEAM METAL ROOFING
2. NOT USED
3. OVERHANG - SEE STRUCTURAL
4. TYP EXTERIOR DOOR - SEE SCHEDULE SHEET N3.0
5. WINDOW - SEE SCHEDULE SHEET N3.0
6. NOT USED
7. NOT USED
8. NOT USED
9. DOWNSPOUT SEE DETAIL 8/A5.1 FOR ATTACHMENT
10. ROOM ID AND ISA SIGNAGE (BY OTHER) SEE DETAILS 5 & 9/N4.0 - TYP
11. DURATEMP VERTICAL GROOVE SIDING
11A. 1x4 TRIM
11B. 22 GA. CORNER FLASHING
12. NOT USED
13. NOT USED
14. EXTERIOR LIGHT - SEE ELECTRICAL
15. NOT USED
16. NOT USED
17. NOT USED
18. GUTTER - SEE ATTACHMENT DETAIL 5/A2.2 AT STANDING SEAM ROOFING.
19. MODULAR IDENTIFICATION TAG +90" ABOVE A.F.F.
20. NOT USED
21. WP/G.F.C.I. @ HVAC UNITS - REFER TO ELECTRICAL PLANS
22. NOT USED
23. HVAC UNIT

KEYNOTES

BUILDING SIZE	TOTAL # OF 10'-0" WIDE MODULES	TOTAL # OF CENTER MODULES	TOTAL BLDG WIDTH
☒ 30'x32'	3	1	30'-0"
☐ 40'x32'	4	2	40'-0"
☐ 50'x32'	5	3	50'-0"
☐ 60'x32'	6	4	60'-0"

BUILDING SIZE SCHEDULE

IDENTIFICATION STAMP
DIV. OF THE STATE ARCHITECT
APP: 02-122533 INC:
REVIEWED FOR
SS ☑ FLS ☑ ACS ☑
DATE: 05/22/2024

American Modular Systems
787 Spreckels Ave., Manteca, CA 95336
Phone (209) 825-1921 Fax (209) 825-7018
www.americanmodular.com

INTELLECTUAL-PROPERTY & PROPRIETARY RIGHTS STATEMENT
COPYRIGHT © AMERICAN MODULAR SYSTEMS (AMS)
AMS OWNS ALL COPYRIGHT AND OTHER INTELLECTUAL-PROPERTY AND PROPRIETARY RIGHTS IN THESE DRAWINGS, SPECIFICATIONS, AND THE MATERIAL CONTAINED HEREIN. CERTAIN ELEMENTS SHOWN IN THESE DOCUMENTS ARE REGISTERED TRADEMARKS OF AMS. ALL PATENTABLE MATERIALS CONTAINED IN THESE DOCUMENTS AND ORIGINATING WITH AMS WILL REMAIN THE SOLE PROPERTY OF AMS. THESE DRAWING, SPECIFICATIONS AND THE MATERIAL CONTAINED HEREIN MAY NOT BE REPRODUCED, TRANSMITTED, COPIED, DISTRIBUTED, MODIFIED, OR OTHERWISE DISPOSED OF (DIRECTLY OR INDIRECTLY) AND MAY NOT BE USED (IN WHOLE OR IN PART) TO ASSIST IN THE CONSTRUCTION, DESIGN, OR OTHER MAKING OF, OR FOR THE PURPOSE OF FURNISHING ANY INFORMATION FOR THE CONSTRUCTION, DESIGN, OR OTHER MAKING OF, ANY BUILDINGS (MODULAR OR OTHERWISE), DRAWINGS, SPECIFICATIONS, PRINTS, APPARATUS, OR PARTS THEREOF, EXCEPT AS EXPRESSLY PERMITTED BY WRITTEN CONSENT OF, OR IN A WRITTEN AGREEMENT WITH, AMS. SUBMITTAL OR DISTRIBUTION TO MEET OFFICIAL REGULATORY REQUIREMENTS WILL NOT BE CONSTRUED AS PUBLICATION IN DEROGATION OF AMS'S COPYRIGHT OR OTHER INTELLECTUAL-PROPERTY OR PROPRIETARY RIGHTS.

PRE-CHECKED SET NAME

30' x 32' THRU 60' x 32'

2GO®

SITE SPECIFIC PROJECT NAME

GALT JOINT UESD
VERNON GREER ES
(2) 30'X32' BUILDINGS

MANUFACTURER PROFESSIONAL OF RECORD ON PC

LICENSED ARCHITECT
ANDRAY PATRICK CALVANI
No. C12631
Exp. 3-31-25
STATE OF CALIFORNIA

THESE DRAWINGS ARE PRELIMINARY AND NOT FOR CONSTRUCTION UNLESS STAMPED & SIGNED BY THE DESIGN PROFESSIONAL OF RECORD.

REVISIONS
1
2
3
4

DRAWN BY:	A.V.
SCALE:	AS NOTED
DATE:	01/04/24
PROJECT NO:	1878-24

SHEET TITLE:

TYPICAL EXTERIOR ELEVATION - DURATEMP VERTICAL GROOVE SIDING

SHEET NUMBER:

A5.0

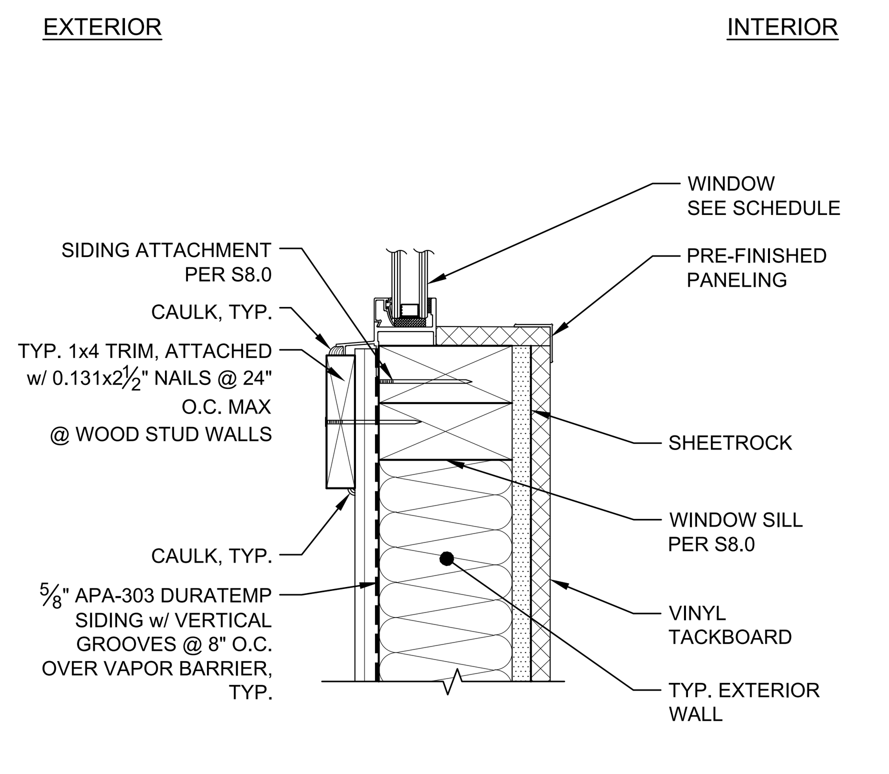

TYPICAL WINDOW SILL SCALE: 3" = 1'-0" 1

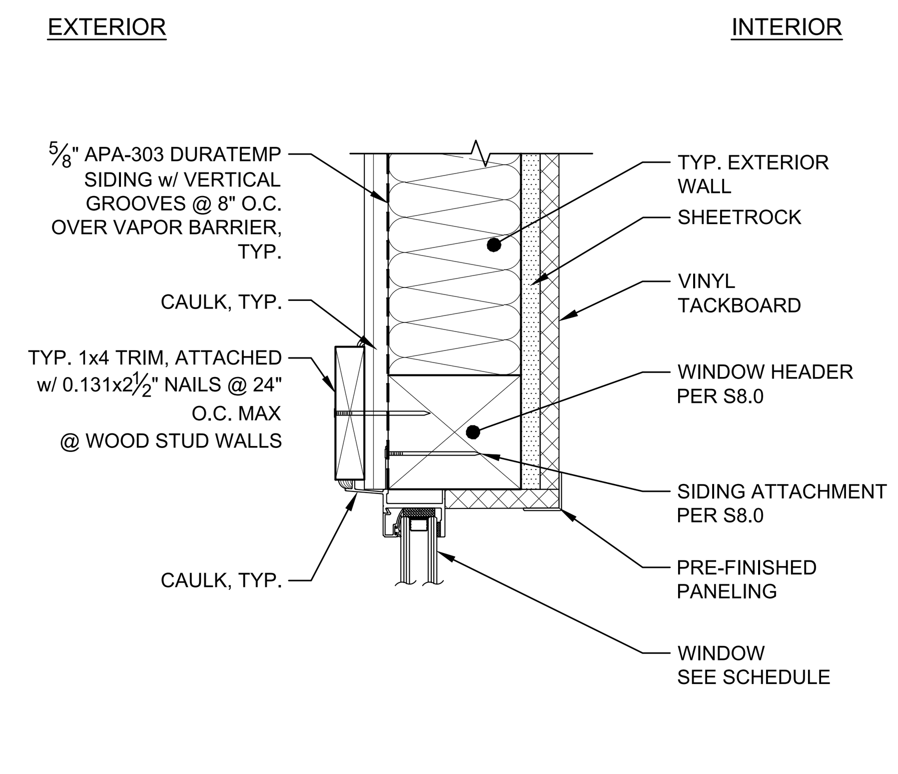

TYPICAL WINDOW HEADER SCALE: 3" = 1'-0" 2

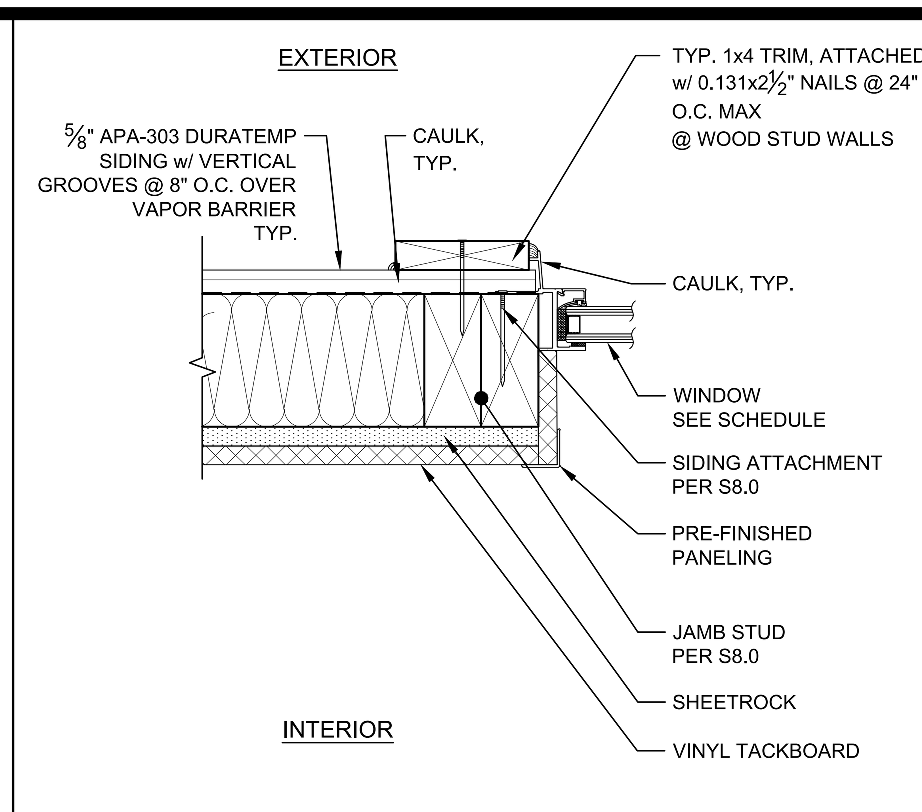

TYPICAL WINDOW JAMB SCALE: 3" = 1'-0" 3

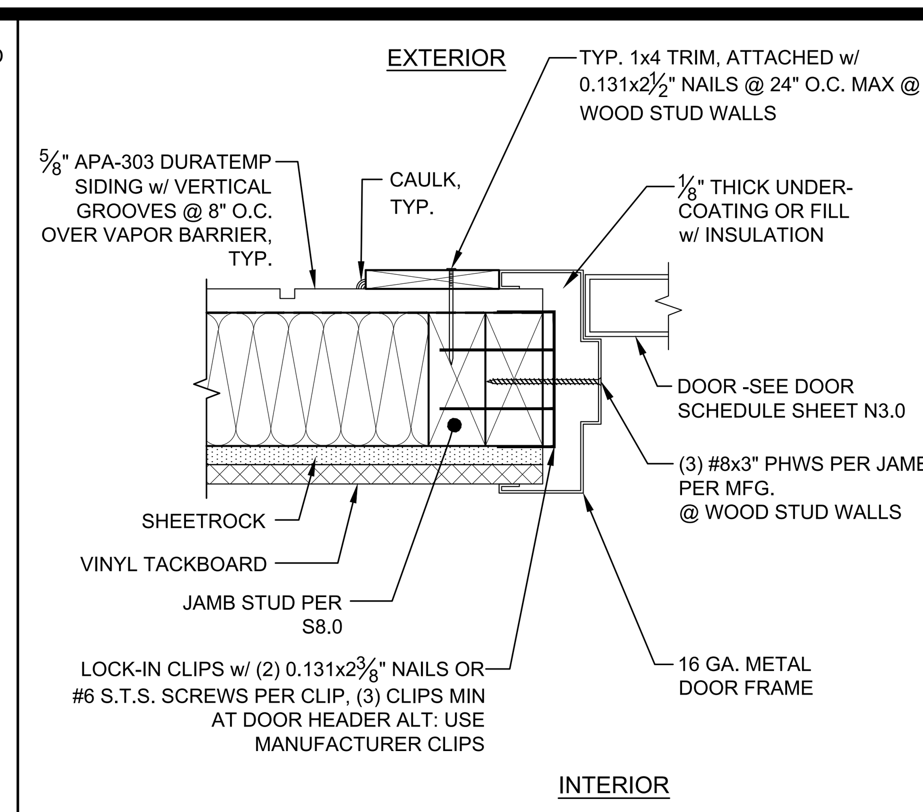

TYPICAL DOOR JAMB SCALE: 3" = 1'-0" 4

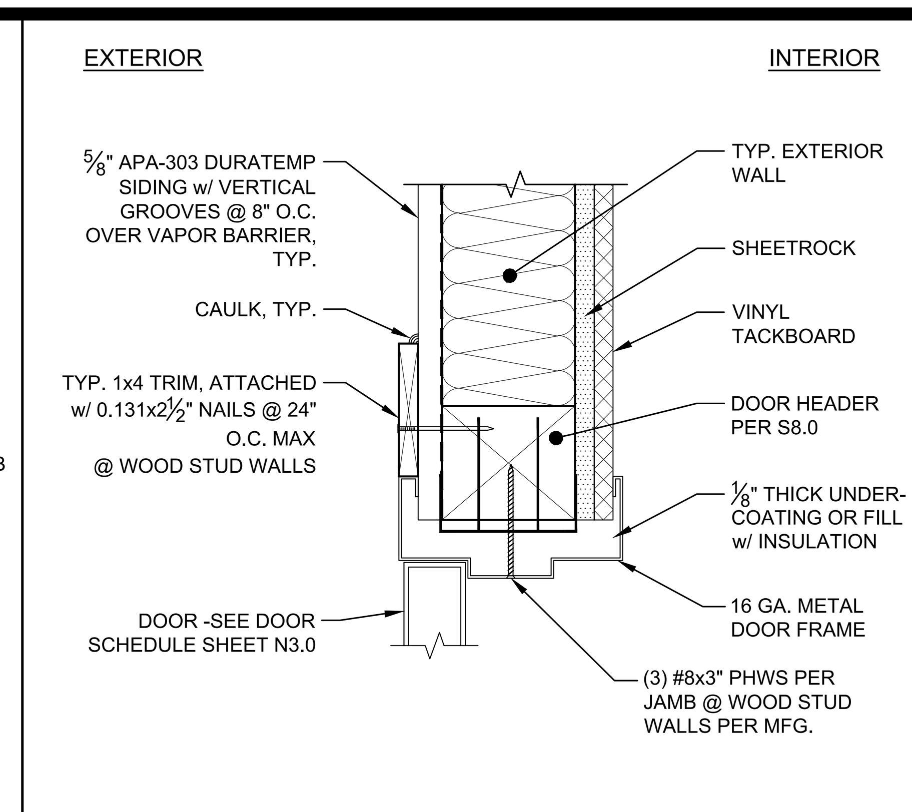

TYPICAL DOOR HEADER SCALE: 3" = 1'-0" 5

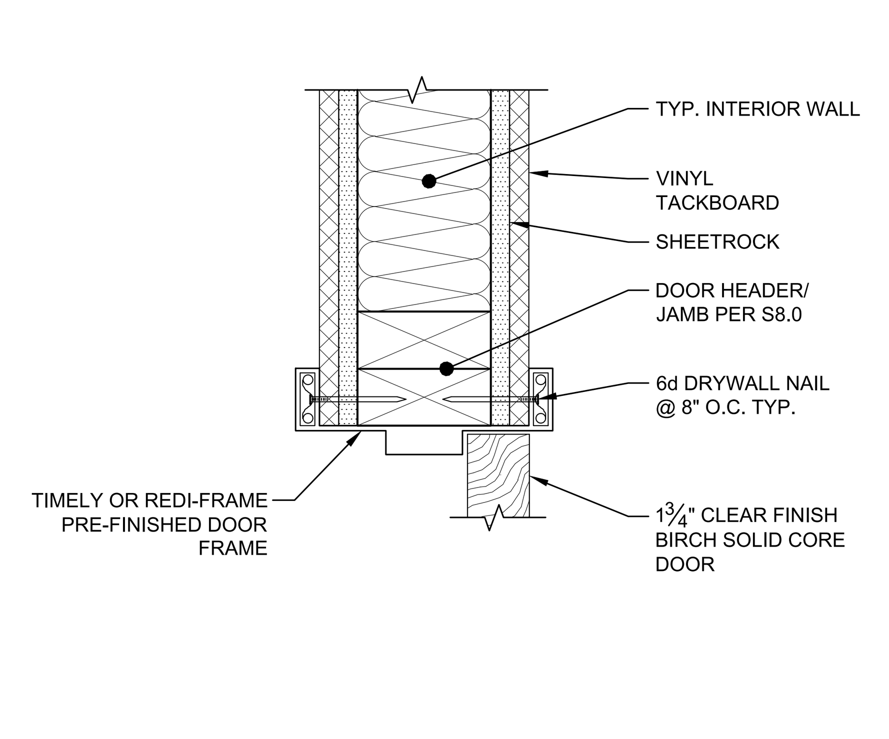

TYP. INTERIOR DOOR HEADER/JAMB SCALE: 3" = 1'-0" 6

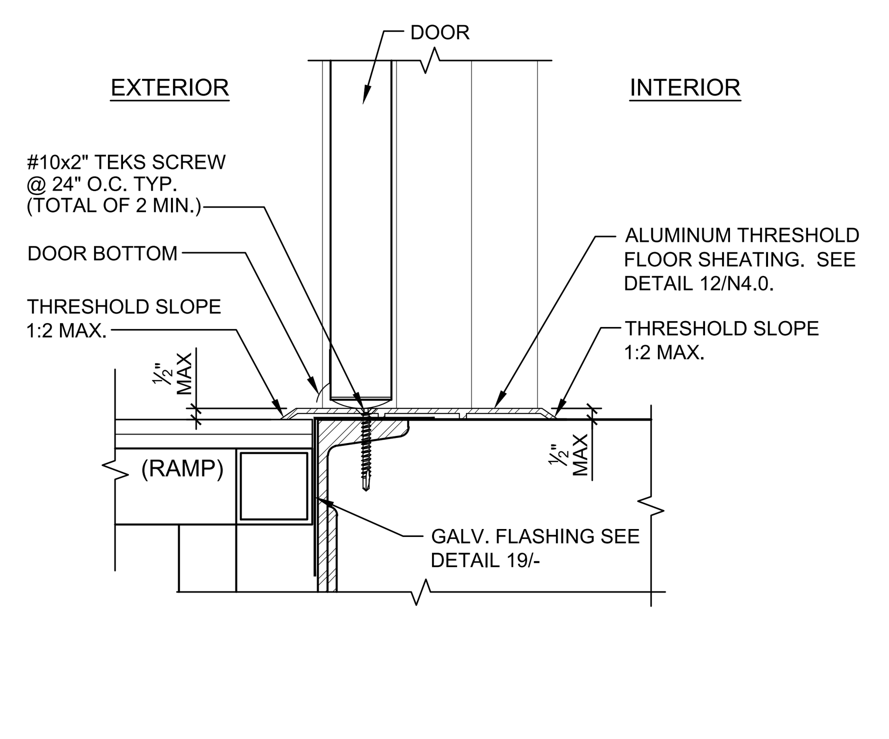

TYPICAL THRESHOLD DETAIL SCALE: 3" = 1'-0" 7

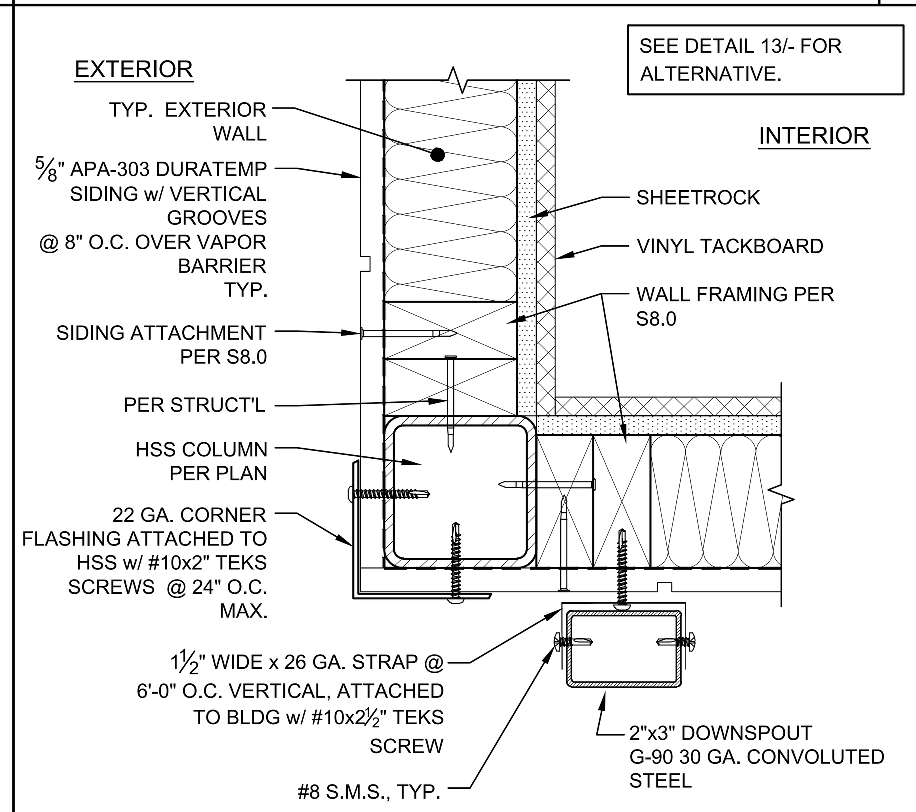

TYP. BLDG CORNER & DOWNSPOUT ATTACHMENT DETAIL SCALE: 3" = 1'-0" 8

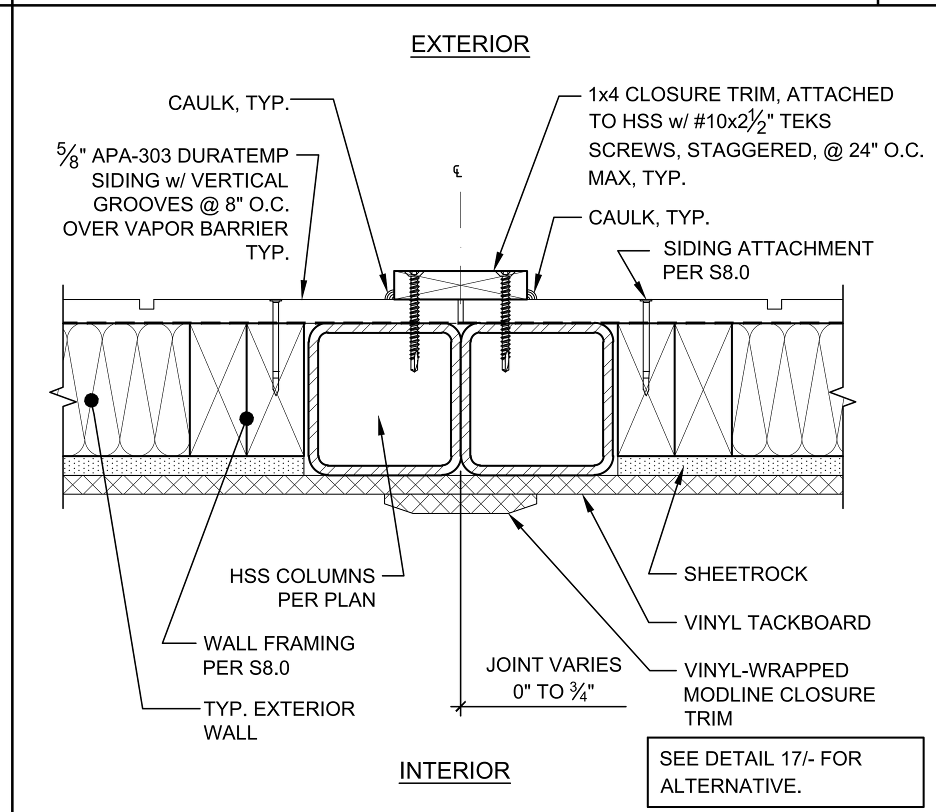

TYP. MODLINE CLOSURE DETAIL SCALE: 3" = 1'-0" 9

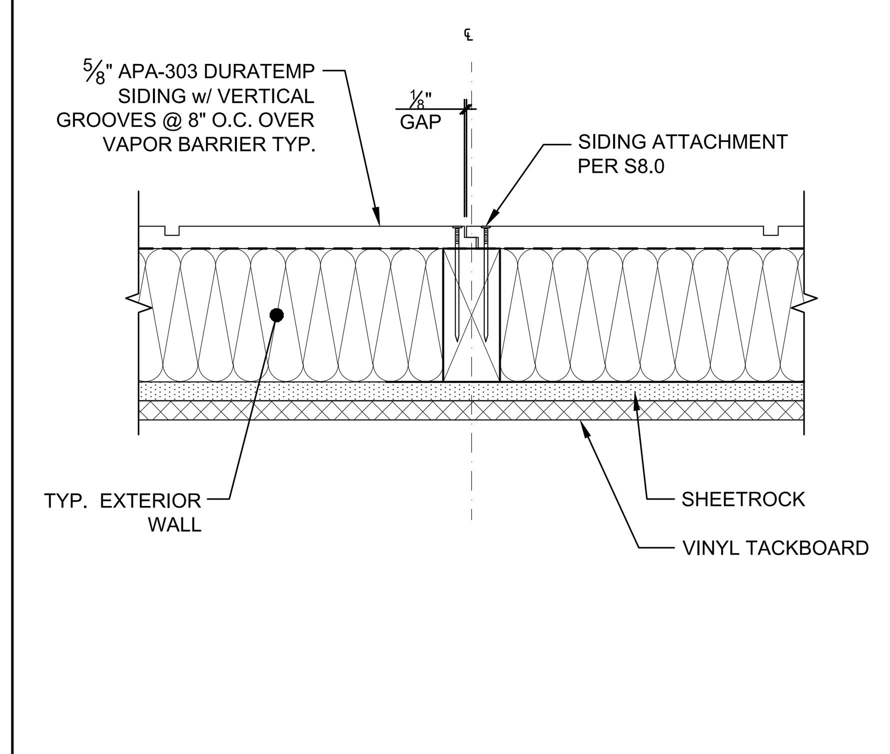

TYP. SIDING JOINT DETAIL SCALE: 3" = 1'-0" 10

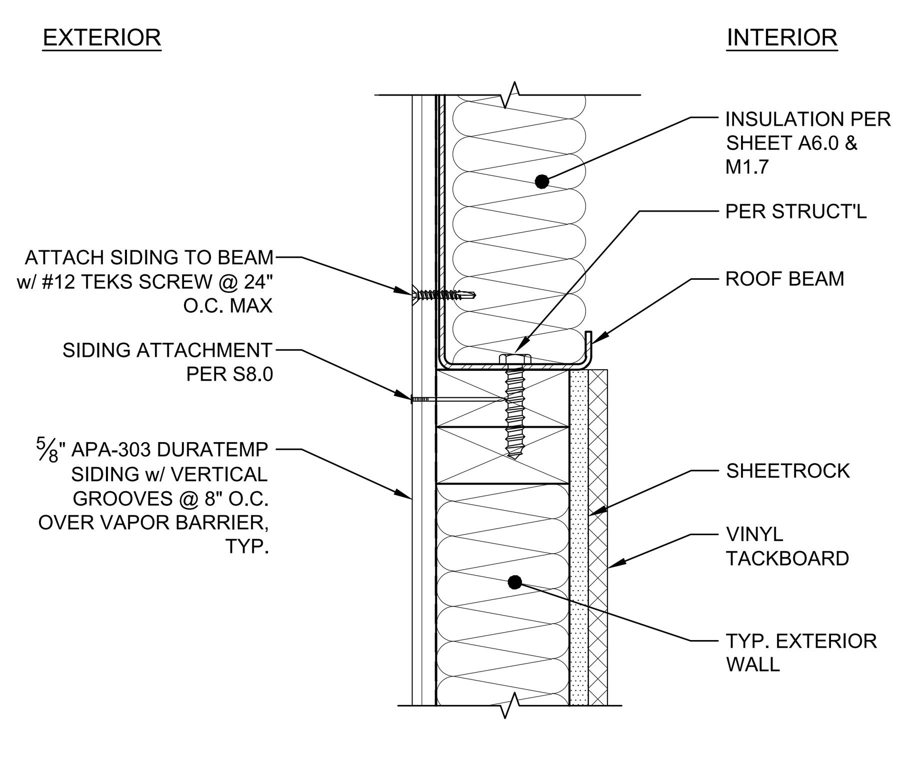

SIDING DETAIL @ ROOF BEAM SCALE: 3" = 1'-0" 11

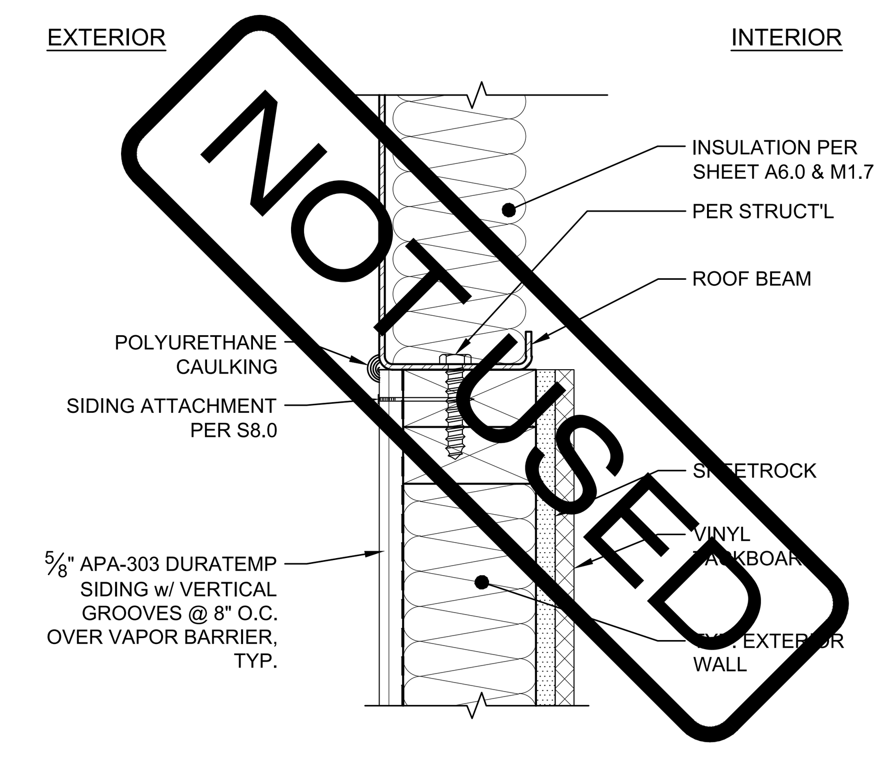

ALTERNATE SIDING @ ROOF BEAM SCALE: 3" = 1'-0" 12

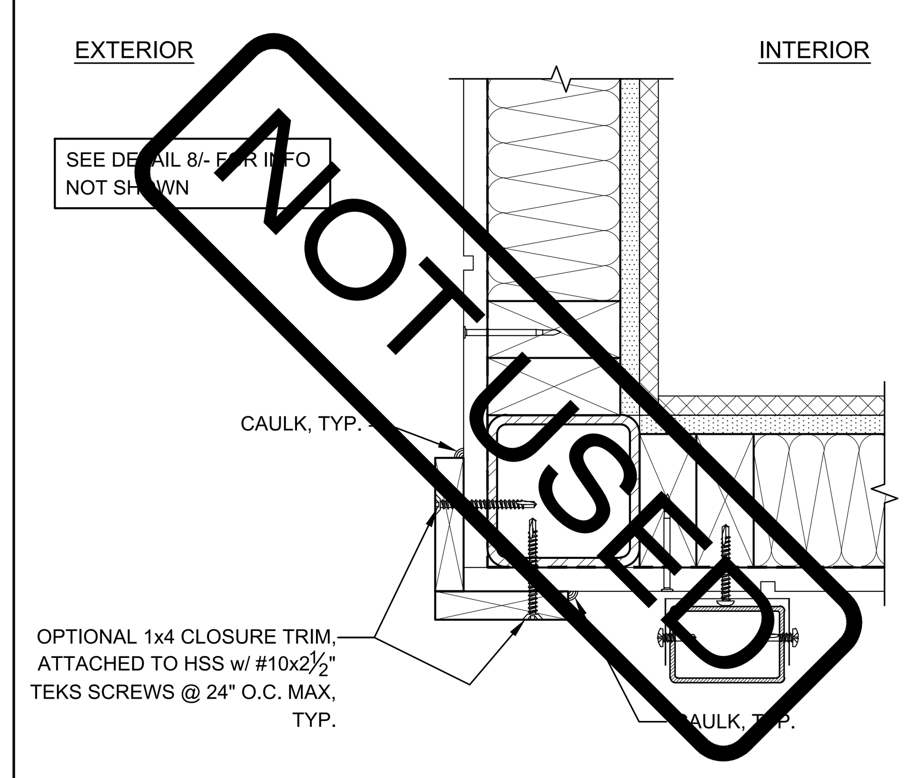

ALTERNATE BUILDING CORNER DETAIL SCALE: 3" = 1'-0" 13

1. REFER TO SHEET A6.0 FOR ALL BUILDING INSULATION INSTALLATION NOT SHOWN OR NOTED ON DETAIL ON THIS SHEET.
2. FLASHING SHALL BE PROVIDED PER DETAILS 10 & 19/-.
3. DURATEMP SPECIFICATIONS - 7', 8', 9' & 10' X 4' HARDBOARDS, GRADES APA & PS 1 SPECIFICATIONS - 4", 8" GROOVE PATTERNS. FLAME SPREAD INDEX OF 126.2 (ALLOWABLE 75-200). FLAME SPREAD AND SMOKE DEVELOPMENT SHALL CONFORM TO CBC SECTION 720. NAILING SHALL BE 0.131"Ø GALV. NAILS @ 6" O.C. E.N. AND 12" O.C. F.N. (ALL EDGES BLOCKED) SMOKE DEVELOPMENT LESS THAN 450

SHEET NOTES

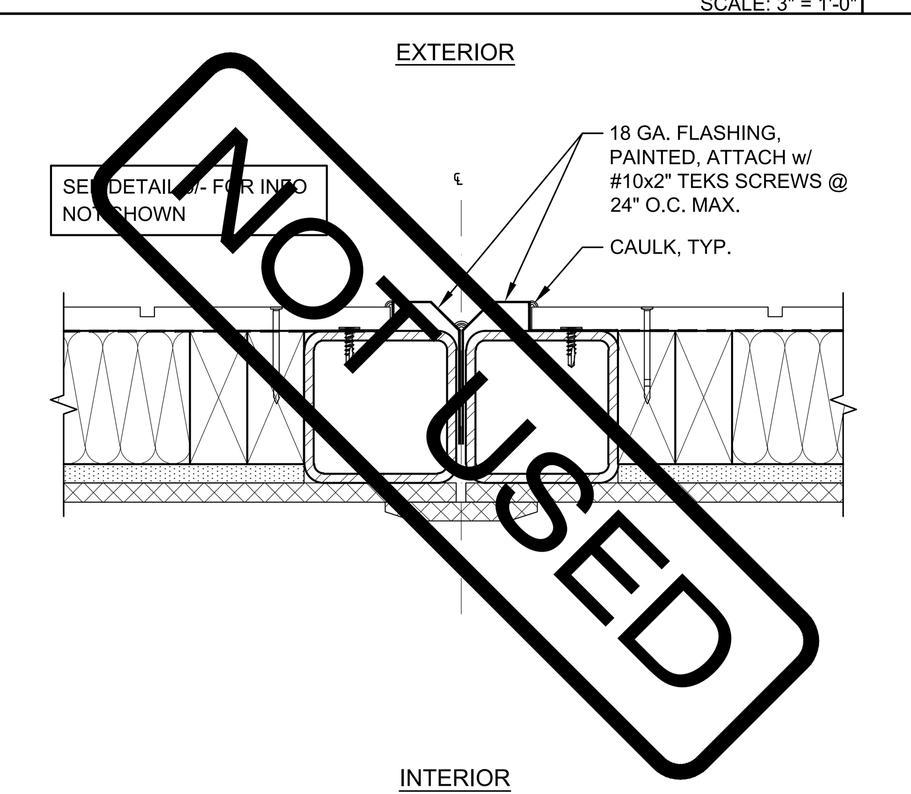

ALTERNATE MODLINE CLOSURE DETAIL 17

NOT USED SCALE: 3" = 1'-0" 18

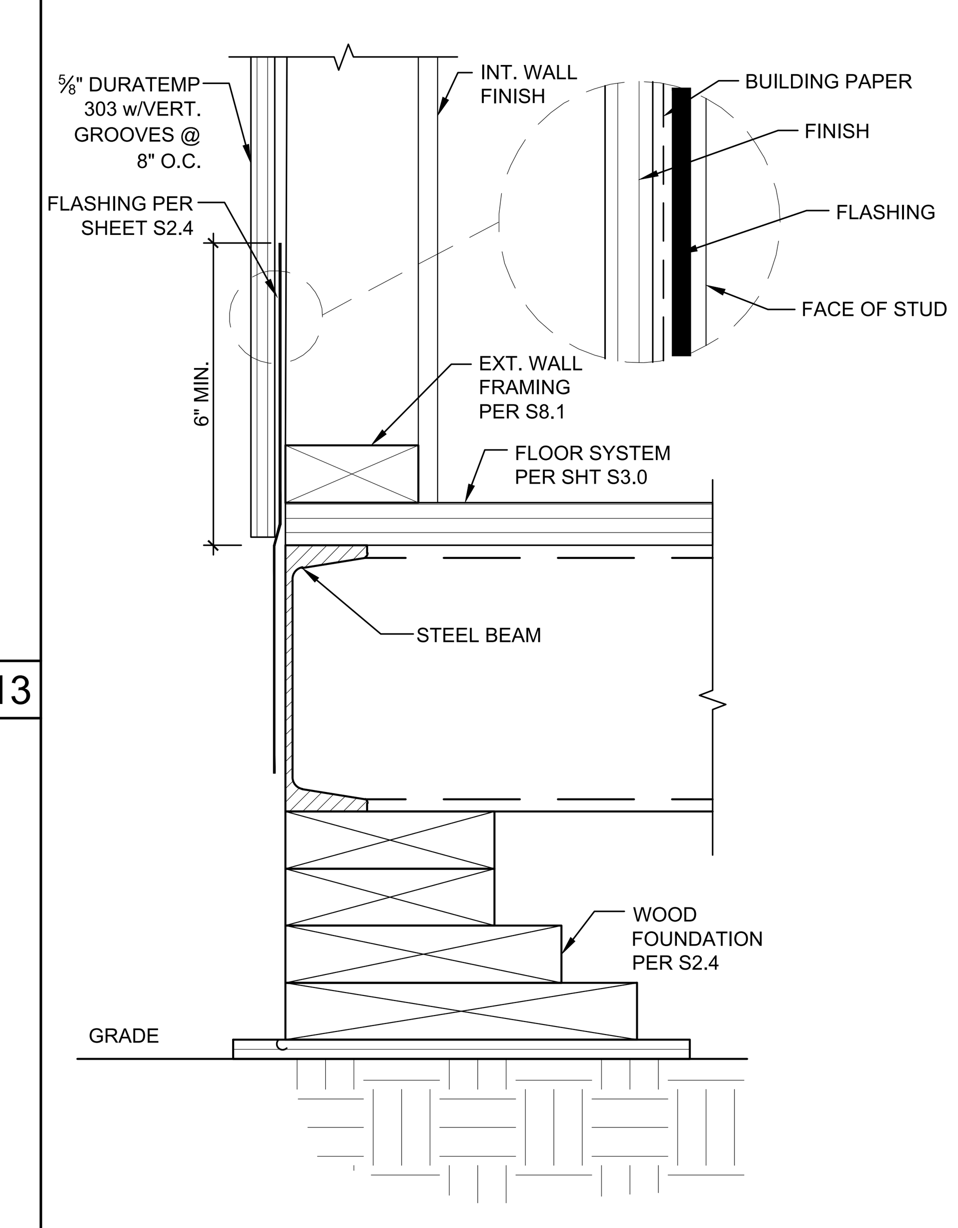

FLASHING/SIDING DETAIL @ FLOOR BEAM

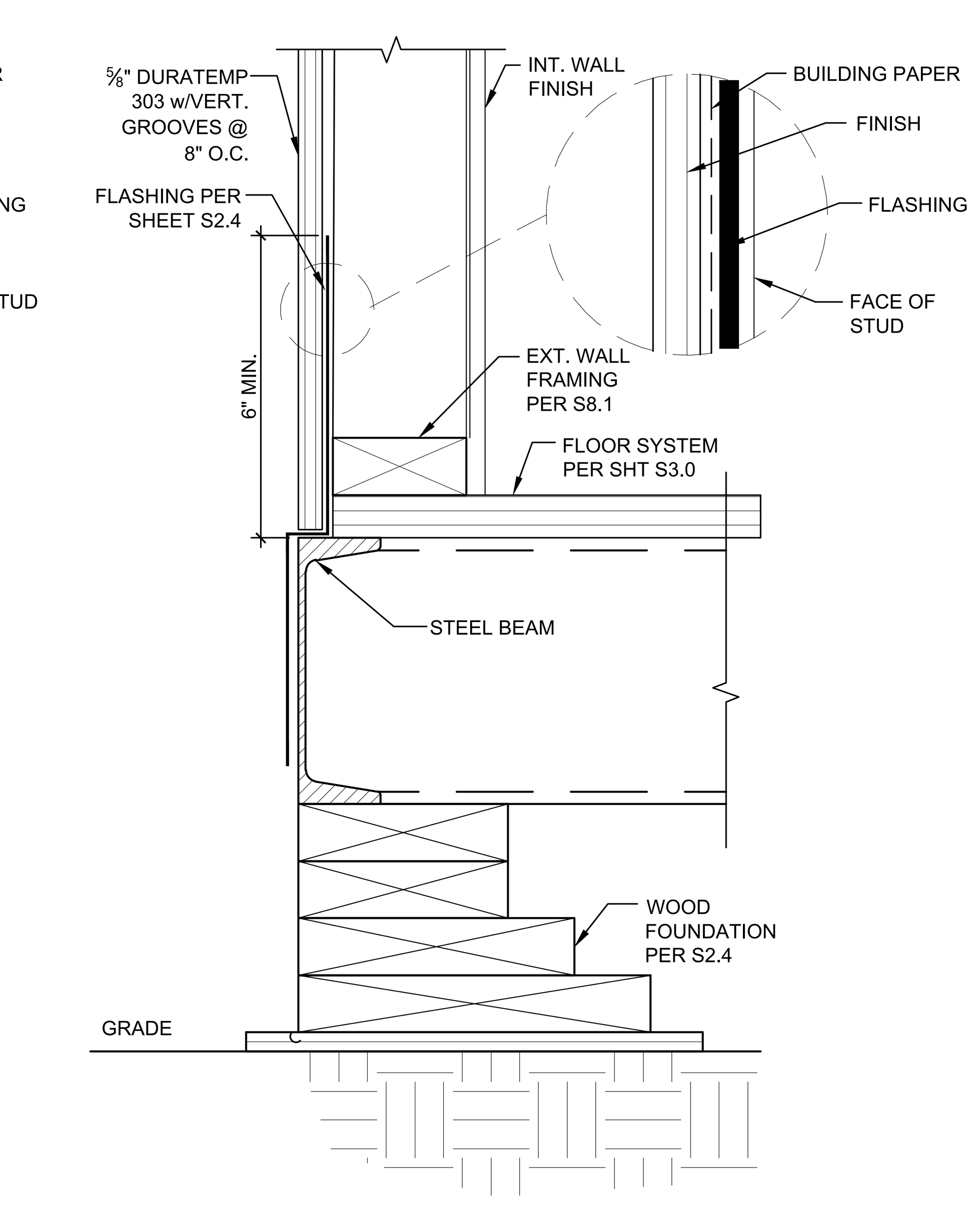

ALTERNATE FLASHING/SIDING DETAIL @ FLOOR BEAM

FLASHING DETAIL SCALE: 3" = 1'-0" 19

IDENTIFICATION STAMP
DIV. OF THE STATE ARCHITECT
APP: 02-122533 INC:
REVIEWED FOR
SS ☑ FLS ☑ ACS ☑
DATE: 05/22/2024

American Modular Systems
787 Spreckels Ave., Manteca, CA 95336
Phone (209) 825-1921 Fax (209) 825-7018
www.americanmodular.com

INTELLECTUAL-PROPERTY & PROPRIETARY RIGHTS STATEMENT
COPYRIGHT © AMERICAN MODULAR SYSTEMS (AMS)
AMS OWNS ALL COPYRIGHT AND OTHER INTELLECTUAL-PROPERTY AND PROPRIETARY RIGHTS IN THESE DRAWINGS, SPECIFICATIONS, AND THE MATERIAL CONTAINED HEREIN. CERTAIN ELEMENTS SHOWN IN THESE DOCUMENTS ARE REGISTERED TRADEMARKS OF AMS. ALL PATENTABLE MATERIALS CONTAINED IN THESE DOCUMENTS AND ORIGINATING WITH AMS WILL REMAIN THE SOLE PROPERTY OF AMS. THESE DRAWING, SPECIFICATIONS, AND THE MATERIAL CONTAINED HEREIN MAY NOT BE REPRODUCED, TRANSMITTED, COPIED, DISTRIBUTED, MODIFIED, OR OTHERWISE DISPOSED OF (DIRECTLY OR INDIRECTLY) AND MAY NOT BE USED (IN WHOLE OR IN PART) TO ASSIST IN THE CONSTRUCTION, DESIGN, OR OTHER MAKING OF, OR FOR THE PURPOSE OF FURNISHING ANY INFORMATION FOR THE CONSTRUCTION, DESIGN, OR OTHER MAKING OF, ANY BUILDINGS (MODULAR OR OTHERWISE), DRAWINGS, SPECIFICATIONS, PRINTS, APPARATUS, OR PARTS THEREOF, EXCEPT AS EXPRESSLY PERMITTED BY WRITTEN CONSENT OF, OR IN A WRITTEN AGREEMENT WITH, AMS. SUBMITTAL OR DISTRIBUTION TO MEET OFFICIAL REGULATORY REQUIREMENTS WILL NOT BE CONSTRUED AS PUBLICATION IN DEROGATION OF AMS'S COPYRIGHT OR OTHER INTELLECTUAL-PROPERTY OR PROPRIETARY RIGHTS.

PRE-CHECKED SET NAME
30' x 32' THRU 60' x 32'
2GO®

SITE SPECIFIC PROJECT NAME
.
.
.

APPROVED
DIV. OF THE STATE ARCHITECT
APP: 04-122041 PC
REVIEWED FOR
SS ☑ FLS ☑ ACS ☑ CG ☑
DATE: 04/05/2024

☐ 2022 CBC PRE-CHECK (PC) DOCUMENT
A SEPARATE PROJECT APPLICATION FOR CONSTRUCTION IS REQUIRED.

MANUFACTURER PROFESSIONAL OF RECORD ON PC
LICENSED ARCHITECT RANDAL PATRICK CAVANAGH No. C12631 Ren. 3-31-25 STATE OF CALIFORNIA

THESE DRAWINGS ARE PRELIMINARY AND NOT FOR CONSTRUCTION UNLESS STAMPED & SIGNED BY THE DESIGN PROFESSIONAL OF RECORD.

REVISIONS
1
2
3
4

DRAWN BY:	A.A.
SCALE:	AS NOTED
DATE:	DD/MM/YY
PROJECT NO:	XXXX-XX

SHEET TITLE:
TYP. ARCHITECTURAL DETAILS - DURATEMP 303 SIDING OPTION

SHEET NUMBER:
A5.1

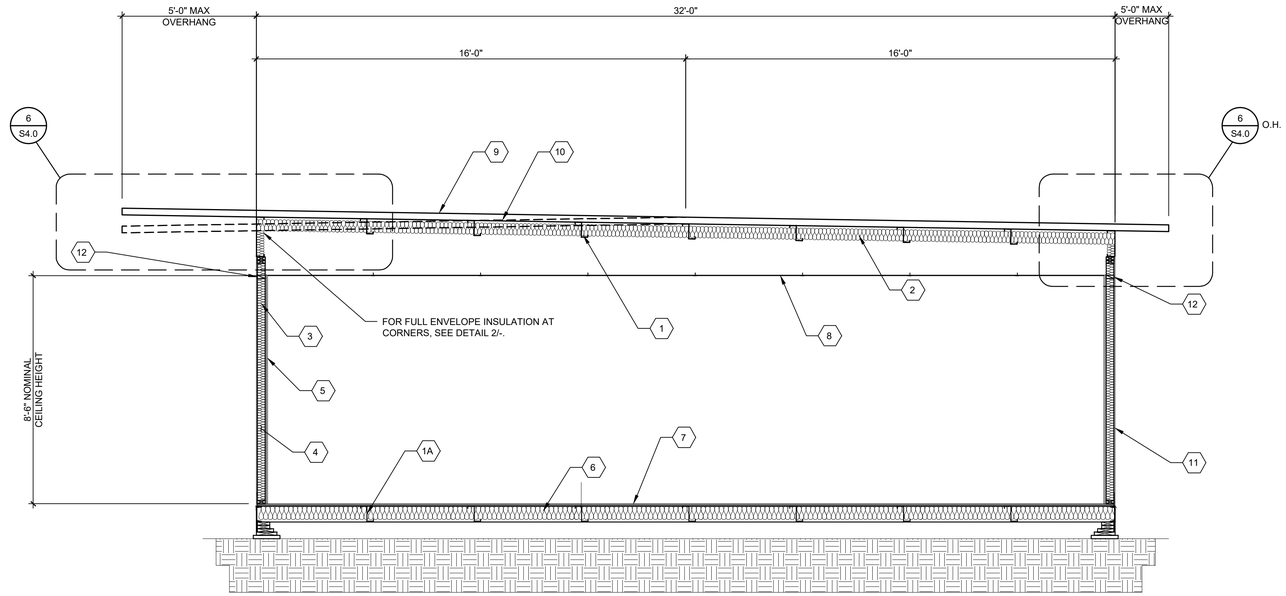

TYP. LONGITUDINAL SECTION - MONO/DUAL PITCH

SCALE: 3/8"=1'-0" | A

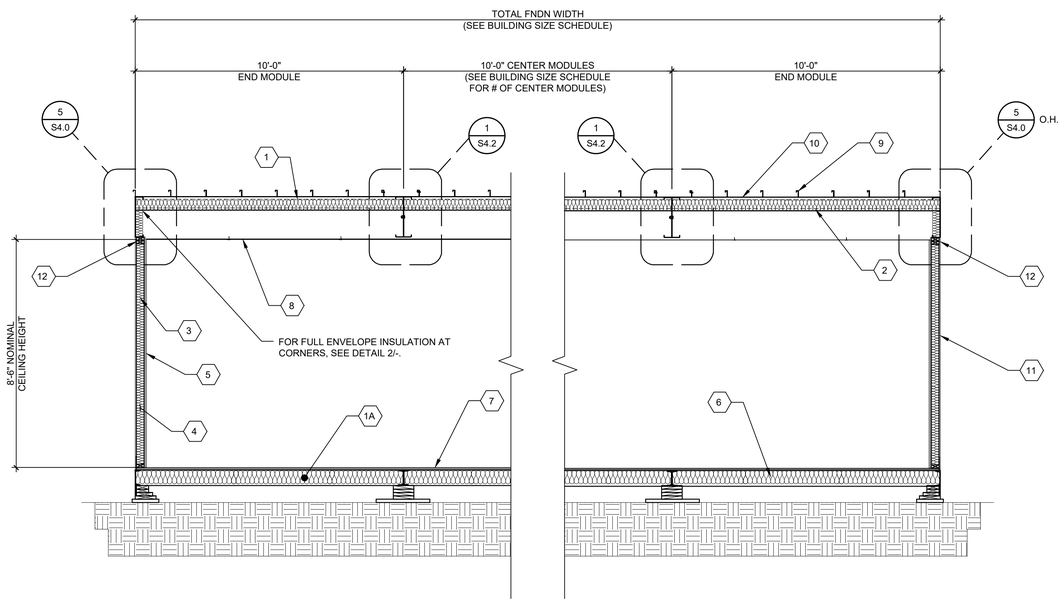

TYP. TRANSVERSE SECTION - MONO/DUAL PITCH

SCALE: 3/8"=1'-0" | B

1. ROOF PURLINS PER ROOF FRAMING PLAN
1A. FLOOR JOISTS PER FLOOR FRAMING PLAN
2. BATT ROOF INSULATION PER SHEET M1.7
3. WALL FRAMING PER SHEETS S8.0
4. WALL INSULATION PER SHEET M1.7
5. VINYL FABRIC OVER TACKABLE BRACING PANELS
6. BATT FLOOR INSULATION PER SHEET M1.7 (PLYWOOD FLOOR ONLY)
7. PLYWOOD FLOOR PER SHEET S3.0
8. SUSPENDED T-BAR CEILING PER M1.0
9. FINISHED ROOFING PER ROOF PLAN & ROOF FRAMING PLAN
10. STEEL CROSS BRACING WITHOUT RIGID ROOF INSULATION (S4.0)
11. EXTERIOR WALL FINISH PER EXTERIOR ELEVATIONS
12. FIRE BLOCKING @ CEILING LEVEL PER CBC 718.2
13. RIGID INSULATION SEE TABLE ON SHEET M1.7A

KEY NOTES

BUILDING SIZE SCHEDULE			
BUILDING SIZE	TOTAL # OF 10'-0" WIDE MODULES	TOTAL # OF CENTER MODULES	TOTAL FNDN WIDTH
☒ 30'x32'	3	1	30'-0¾"
☐ 40'x32'	4	2	40'-1"
☐ 50'x32'	5	3	50'-1¼"
☐ 60'x32'	6	4	60'-1½"

BUILDING SIZE SCHEDULE

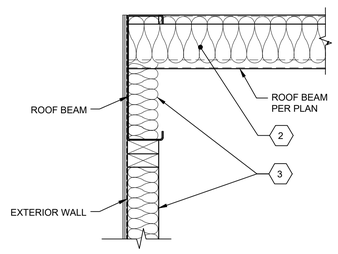

INSULATION CORNER DET.

SCALE: 1-1/2"=1'-0" | 1

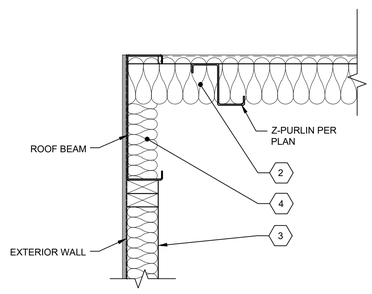

INSULATION CORNER DET.

SCALE: 1-1/2"=1'-0" | 2

IDENTIFICATION STAMP
DIV. OF THE STATE ARCHITECT
APP: 02-122533 INC:
REVIEWED FOR
SS ☑ FLS ☑ ACS ☑
DATE: 05/22/2024

American Modular Systems
787 Spreckels Ave., Manteca, CA 95336
Phone (209) 825-1921 Fax (209) 825-7018
www.americanmodular.com

INTELLECTUAL-PROPERTY & PROPRIETARY RIGHTS STATEMENT
COPYRIGHT © AMERICAN MODULAR SYSTEMS (AMS)
AMS OWNS ALL COPYRIGHT AND OTHER INTELLECTUAL-PROPERTY AND PROPRIETARY RIGHTS IN THESE DRAWINGS, SPECIFICATIONS, AND THE MATERIAL CONTAINED HEREIN. CERTAIN ELEMENTS SHOWN IN THESE DOCUMENTS ARE REGISTERED TRADEMARKS OF AMS. ALL PATENTABLE MATERIALS CONTAINED IN THESE DOCUMENTS AND ORIGINATING WITH AMS WILL REMAIN THE SOLE PROPERTY OF AMS. THESE DRAWING, SPECIFICATIONS AND THE MATERIAL CONTAINED HEREIN MAY NOT BE REPRODUCED, TRANSMITTED, COPIED, DISTRIBUTED, MODIFIED, OR OTHERWISE DISPOSED OF (DIRECTLY OR INDIRECTLY) AND MAY NOT BE USED (IN WHOLE OR IN PART) TO ASSIST IN THE CONSTRUCTION, DESIGN, OR OTHER MAKING OF, OR FOR THE PURPOSE OF FURNISHING ANY INFORMATION FOR THE CONSTRUCTION, DESIGN, OR OTHER MAKING OF, ANY BUILDINGS (MODULAR OR OTHERWISE), DRAWINGS, SPECIFICATIONS, PRINTS, APPARATUS, OR PARTS THEREOF, EXCEPT AS EXPRESSLY PERMITTED BY WRITTEN CONSENT OF, OR IN A WRITTEN AGREEMENT WITH, AMS. SUBMITTAL OR DISTRIBUTION TO MEET OFFICIAL REGULATORY REQUIREMENTS WILL NOT BE CONSTRUED AS PUBLICATION IN DEROGATION OF AMS'S COPYRIGHT OR OTHER INTELLECTUAL-PROPERTY OR PROPRIETARY RIGHTS.

PRE-CHECKED SET NAME

30' x 32' THRU 60' x 32'

2GO®

SITE SPECIFIC PROJECT NAME

.
.
.

APPROVED
DIV. OF THE STATE ARCHITECT
APP: 04-122041 PC
REVIEWED FOR
SS ☑ FLS ☑ ACS ☑ CG ☑
DATE: 04/05/2024

☐ 2022 CBC PRE-CHECK (PC) DOCUMENT
A SEPARATE PROJECT APPLICATION FOR CONSTRUCTION IS REQUIRED.

MANUFACTURER PROFESSIONAL OF RECORD ON PC

LICENSED ARCHITECT
ANDREW PATRICK CALLAGHAN
No. C12631
Ren. 3-31-25
STATE OF CALIFORNIA

THESE DRAWINGS ARE PRELIMINARY AND NOT FOR CONSTRUCTION UNLESS STAMPED & SIGNED BY THE DESIGN PROFESSIONAL OF RECORD.

REVISIONS

1
2
3
4

DRAWN BY:	A.A.
SCALE:	AS NOTED
DATE:	DD/MM/YY
PROJECT NO:	XXXX-XX

SHEET TITLE:

TYPICAL LONGITUDINAL AND TRANSVERSE BUILDING SECTIONS

SHEET NUMBER:

A6.0

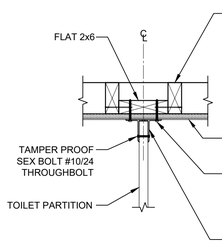

WOOD STUDS
OPTION No. 1

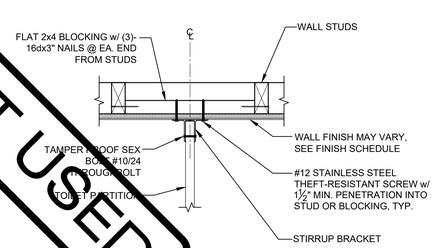

WOOD STUDS
OPTION No. 2

NOT USED

TOILET PARTITION ANCHORAGE BLOCKING DETAILS @ WALL — SCALE: 1-1/2" = 1'-0" — 1

NOTCH & BORING SCHEDULE					
	STUD WIDTH		NOTCHING	BORING	
SIZE	NOMINAL	ACTUAL	25%	30%	60%
2x4	4"	3½"	⅞"	1"	2 1/16"
2x6	6"	5½"	1⅜"	1⅝"	3¼"
2x8	8"	7¼"	1 13/16"	2⅛"	4 5/16"

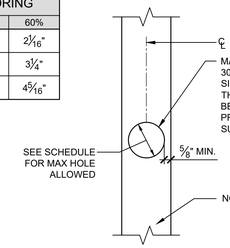

EXTERIOR WALL
BORING

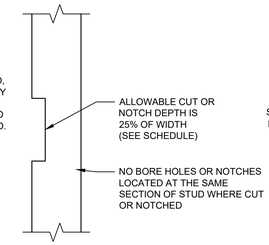

INTERIOR WALL
NOTCHING

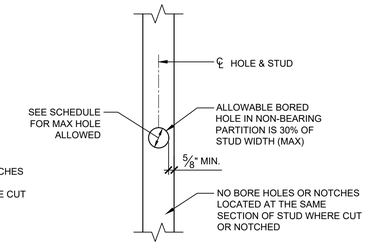

INTERIOR WALL
BORING

STUD NOTCHING AND BORING DETAILS — NOT TO SCALE — 2

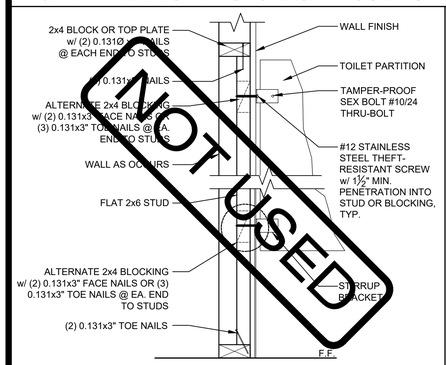

TOILET PARTITION WALL BLOCKING — NOT TO SCALE — 3

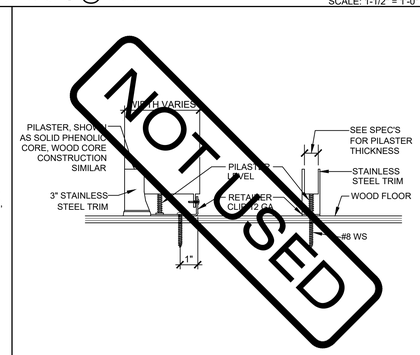

PARTITION TO WOOD FLOOR — NOT TO SCALE — 4

NOT USED — 5

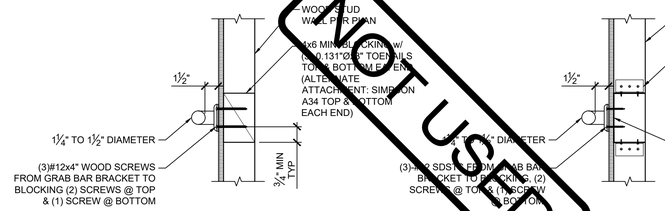

TYPICAL GRAB BAR
BLOCKING DETAIL

ALTERNATE GRAB BAR
BLOCKING DETAIL

NOT USED

GRAB BAR BLOCKING DETAIL — SCALE: 1-1/2" = 1'-0" — 6

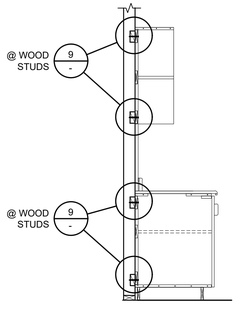

UPPER/BASE CABINET

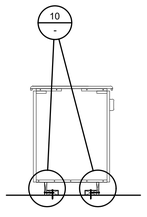

ISLAND CABINET

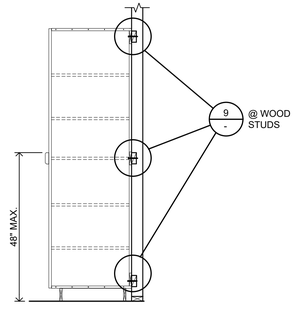

TALL CABINET

TYP. CABINET ATTACHMENT — NOT TO SCALE — 8

SCALE: 1-1/2" = 1'-0"

CABINET ATTACHMENT @ WOOD STUDS — 9

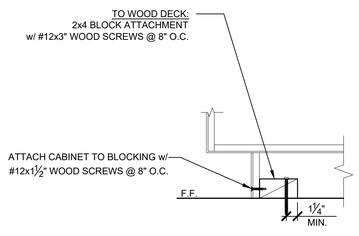

CABINET ATTACHMENT @ FLOOR — SCALE: 1-1/2" = 1'-0" — 10

NOT USED — 11

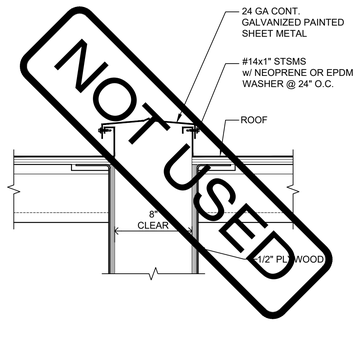

SEISMIC CLOSURE @ ROOF — 12

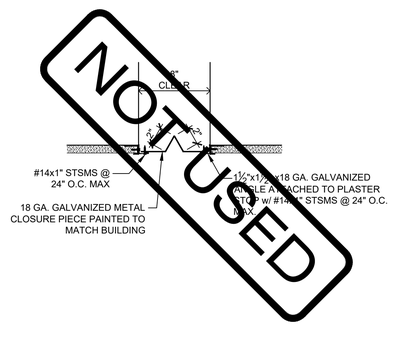

SEISMIC CLOSURE @ WALL — 13

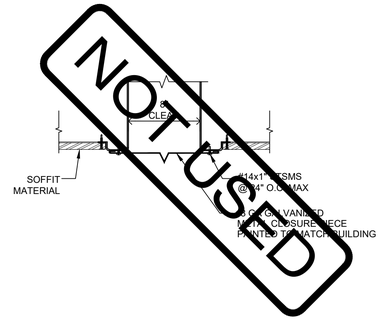

SEISMIC CLOSURE @ SOFFIT — 14

NOT USED — 15

NOT USED — 16

IDENTIFICATION STAMP
DIV. OF THE STATE ARCHITECT
APP: 02-122533 INC:
REVIEWED FOR
SS ☑ FLS ☑ ACS ☑
DATE: 05/22/2024

AMS®
American Modular Systems
787 Spreckels Ave., Manteca, CA 95336
Phone (209) 825-1921 Fax (209) 825-7018
www.americanmodular.com

INTELLECTUAL-PROPERTY & PROPRIETARY RIGHTS STATEMENT
COPYRIGHT © AMERICAN MODULAR SYSTEMS (AMS)
AMS OWNS ALL COPYRIGHT AND OTHER INTELLECTUAL-PROPERTY AND PROPRIETARY RIGHTS IN THESE DRAWINGS, SPECIFICATIONS, AND THE MATERIAL CONTAINED HEREIN. CERTAIN ELEMENTS SHOWN IN THESE DOCUMENTS ARE REGISTERED TRADEMARKS OF AMS. ALL PATENTABLE MATERIALS CONTAINED IN THESE DOCUMENTS AND ORIGINATING WITH AMS WILL REMAIN THE SOLE PROPERTY OF AMS. THESE DRAWING, SPECIFICATIONS, AND THE MATERIAL CONTAINED HEREIN MAY NOT BE REPRODUCED, TRANSMITTED, COPIED, DISTRIBUTED, MODIFIED, OR OTHERWISE DISPOSED OF (DIRECTLY OR INDIRECTLY) AND MAY NOT BE USED (IN WHOLE OR IN PART) TO ASSIST IN THE CONSTRUCTION, DESIGN, OR OTHER MAKING OF, OR FOR THE PURPOSE OF FURNISHING ANY INFORMATION FOR THE CONSTRUCTION, DESIGN, OR OTHER MAKING OF, ANY BUILDINGS (MODULAR OR OTHERWISE), DRAWINGS, SPECIFICATIONS, PRINTS, APPARATUS, OR PARTS THEREOF, EXCEPT AS EXPRESSLY PERMITTED BY WRITTEN CONSENT OF, OR IN A WRITTEN AGREEMENT WITH, AMS. SUBMITTAL OR DISTRIBUTION TO MEET OFFICIAL REGULATORY REQUIREMENTS WILL NOT BE CONSTRUED AS PUBLICATION IN DEROGATION OF AMS'S COPYRIGHT OR OTHER INTELLECTUAL-PROPERTY OR PROPRIETARY RIGHTS.

PRE-CHECKED SET NAME

30' x 32' THRU 60' x 32'

2GO®

SITE SPECIFIC PROJECT NAME

APPROVED
DIV. OF THE STATE ARCHITECT
APP: 04-122041 PC
REVIEWED FOR
SS ☑ FLS ☑ ACS ☑ CG ☑
DATE: 04/05/2024

☐ 2022 CBC PRE-CHECK (PC) DOCUMENT
A SEPARATE PROJECT APPLICATION FOR CONSTRUCTION IS REQUIRED.

MANUFACTURER PROFESSIONAL OF RECORD ON PC

LICENSED ARCHITECT — ANDREW PATRICK KNIGHT — No. C12631 — Ren. 3-31-25 — STATE OF CALIFORNIA

THESE DRAWINGS ARE PRELIMINARY AND NOT FOR CONSTRUCTION UNLESS STAMPED & SIGNED BY THE DESIGN PROFESSIONAL OF RECORD.

REVISIONS

1
2
3
4

DRAWN BY:	A.A.
SCALE:	AS NOTED
DATE:	DD/MM/YY
PROJECT NO:	XXXX-XX

SHEET TITLE:

MISCELLANEOUS
ARCHITECTURAL DETAILS

SHEET NUMBER:

A7.1

1 NOT USED

2 NOT USED

3 NOT USED

5 LIGHT GAUGE FLOOR JOIST PROPERTIES

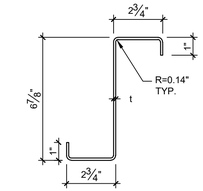

6-7/8" x2-3/4" x14 GA. FLOOR JOIST

ASTM A1011 SS GRADE 45
F_Y = 45KSI

A = 0.98 IN^2
Sx = 2.10 IN^3
Ix = 7.22 IN^4
t = 0.068 IN. MIN.
(0.0713 IN. DESIGN)

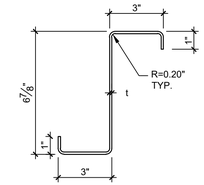

6-7/8" x3" x12 GA. FLOOR JOIST

ASTM A1011 SS GRADE 45
F_Y = 45KSI

A = 1.43 IN^2
Sx = 3.06 IN^3
Ix = 10.54 IN^4
t = 0.097 IN. MIN.
(0.1017 IN. DESIGN)

1504.4.2 STRUCTURAL METAL PANEL ROOF SYSTEMS:
WHERE THE METAL ROOF PANEL FUNCTIONS AS THE ROOF DECK AND ROOF COVERING AND IT PROVIDES BOTH WEATHER PROTECTION AND SUPPORT FOR LOADS, THE STRUCTURAL METAL PANEL ROOF SYSTEM SHALL COMPLY WITH THIS SECTION. STRUCTURAL STANDING-SEAM METAL PANEL ROOF SYSTEMS SHALL BE TESTED IN ACCORDANCE WITH ASTM E1592 OR FM 4474. STRUCTURAL THROUGH FASTENED METAL PANEL ROOF SYSTEMS SHALL BE TESTED IN ACCORDANCE WITH ASTM E1592, FM 4474 OR UL 580.

EXCEPTIONS:
1. METAL ROOFS CONSTRUCTED OF COLD-FORMED STEEL SHALL BE PERMITTED TO BE DESIGNED AND TESTED IN ACCORDANCE WITH THE APPLICABLE REFERENCED STRUCTURAL DESIGN STANDARD IN SECTION 2210.1.

TESTING REPORT:
TWINNING TEST REPORT #226045.R1 UL 1897

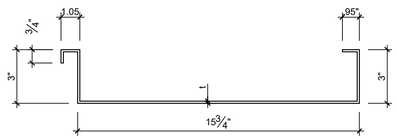

w/ GALVANIZATION
t=0.0356 IN. MIN.

w/0 GALVANIZATION
t=0.0329 IN. MIN.
(0.035 IN. DESIGN)

EFFECTIVE SECTION PROPERTIES

$S_x^c(t)$ = 0.364 IN^3
$S_x^c(b)$ = 1.371 IN^3
I_x^c = 0.863 IN^4

$S_x(t)$ = 0.330 IN^3
$S_x(b)$ = 0.306 IN^3
I_x = 0.476 IN^4
Ae = 0.259 IN^2

ASTM A1011 SS, GRADE 36
Fy = 36 ksi

A = 0.844 IN^2
Sx(t)= 0.418 IN^3
Sx(b)= 1.412 IN^3
Ix = 0.968 IN^4

7 20GA ROOF PAN PROPERTIES

8 NOT USED

11 LIGHT GAUGE ROOF PURLIN PROPERTIES

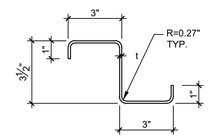

10 GA. ROOF PURLIN

ASTM = A1011 SS
GRADE = 50
Fy = 50ksi
A = 1.31 IN^2
Sx = 1.51 IN^3
Ix = 2.64 IN^4
t = 0.129 IN. MIN.
(0.1345 IN. DESIGN)

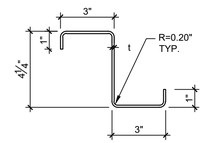

12 GA. ROOF PURLIN

ASTM = A1011 SS
GRADE = 45
Fy = 45ksi
A = 1.16 IN^2
Sx = 1.63 IN^3
Ix = 3.46 IN^4
t = 0.097 IN. MIN.
(0.1017 IN. DESIGN)

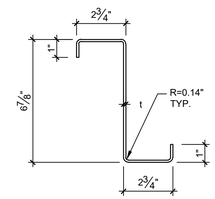

14 GA. ROOF PURLIN

ASTM = A1011 SS
GRADE = 45
Fy = 45ksi
A = 0.98 IN^2
Sx = 2.10 IN^3
Ix = 7.22 IN^4
t = 0.068 IN. MIN.
(0.0713 IN. DESIGN)

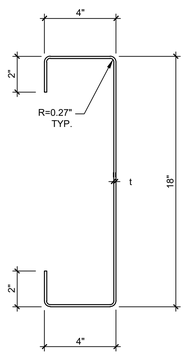

10 GA. LONGITUDINAL BEAM

ASTM = A1011 SS
GRADE = 50
Fy = 50ksi
t = 0.129 IN. MIN.
(0.1345 IN. DESIGN)

BEAM DEPTH	18"
A (IN^2)	3.88
S_X MIN. (IN^3)	19.307
I_X MIN. (IN^4)	173.77

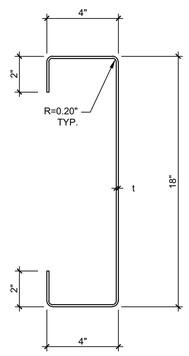

10 GA. TRANSVERSE HEADER

ASTM = A1011 SS
GRADE = 50
Fy = 50ksi
t = 0.129 IN. MIN.
(0.1345 IN. DESIGN)

BEAM DEPTH	18"
A (IN^2)	3.88
S_X MIN. (IN^3)	19.307
I_X MIN. (IN^4)	173.77

18 LIGHT GAUGE ROOF BEAM PROPERTIES

14 NOT USED

19 DETAIL

1. THE MATERIAL THICKNESS OF LIGHT GAUGE STRUCTURAL MEMBERS, IN THEIR END-USE, SHALL MEET OR EXCEED THE MINIMUM BASE METAL THICKNESS SPECIFIED ON SHEET S0.0 THE MATERIAL GAGE DESIGNATION IN THE PLAN SHALL BE USED AS REFERENCE ONLY.
2. UNLESS NOTED OTHERWISE, ALL SECTION PROPERTIES ARE GROSS SECTION PROPERTIES.
3. LIGHT GAUGE STRUCTURAL MEMBERS TO BE FABRICATED FROM HOT ROLLED SHEETS WITH RUST INHIBITIVE COATING. SEE SHEET N2.0, "LIGHT GAUGE METAL STUDS & COLD FORMED STEEL", FOR ADDITIONAL INFORMATION.

19 SHEET NOTES

IDENTIFICATION STAMP
DIV. OF THE STATE ARCHITECT
APP: 02-122533 INC:
REVIEWED FOR
SS ☑ FLS ☑ ACS ☑
DATE: 05/22/2024

American Modular Systems
787 Spreckels Ave., Manteca, CA 95336
Phone (209) 825-1921 Fax (209) 825-7018
www.americanmodular.com

INTELLECTUAL-PROPERTY & PROPRIETARY RIGHTS STATEMENT
COPYRIGHT © AMERICAN MODULAR SYSTEMS (AMS)
AMS OWNS ALL COPYRIGHT AND OTHER INTELLECTUAL-PROPERTY AND PROPRIETARY RIGHTS IN THESE DRAWINGS, SPECIFICATIONS, AND THE MATERIAL CONTAINED HEREIN. CERTAIN ELEMENTS SHOWN IN THESE DOCUMENTS ARE REGISTERED TRADEMARKS OF AMS. ALL PATENTABLE MATERIALS CONTAINED IN THESE DOCUMENTS AND ORIGINATING WITH AMS WILL REMAIN THE SOLE PROPERTY OF AMS. THESE DRAWING, SPECIFICATIONS AND THE MATERIAL CONTAINED HEREIN MAY NOT BE REPRODUCED, TRANSMITTED, COPIED, DISTRIBUTED, MODIFIED, OR OTHERWISE DISPOSED OF (DIRECTLY OR INDIRECTLY) AND MAY NOT BE USED (IN WHOLE OR IN PART) TO ASSIST IN THE CONSTRUCTION, DESIGN, OR OTHER MAKING OF, OR FOR THE PURPOSE OF FURNISHING ANY INFORMATION FOR THE CONSTRUCTION, DESIGN, OR OTHER MAKING OF, ANY BUILDINGS (MODULAR OR OTHERWISE), DRAWINGS, SPECIFICATIONS, PRINTS, APPARATUS, OR PARTS THEREOF, EXCEPT AS EXPRESSLY PERMITTED BY WRITTEN CONSENT OF, OR IN A WRITTEN AGREEMENT WITH, AMS. SUBMITTAL OR DISTRIBUTION TO MEET OFFICIAL REGULATORY REQUIREMENTS WILL NOT BE CONSTRUED AS PUBLICATION IN DEROGATION OF AMS'S COPYRIGHT OR OTHER INTELLECTUAL-PROPERTY OR PROPRIETARY RIGHTS.

PRE-CHECKED SET NAME
30' x 32' THRU 60' x 32'

2GO

SITE SPECIFIC PROJECT NAME
.
.
.

APPROVED
DIV. OF THE STATE ARCHITECT
APP: 04-122041 PC
REVIEWED FOR
SS ☑ FLS ☑ ACS ☑ CG ☑
DATE: 04/05/2024

☐ 2022 CBC PRE-CHECK (PC) DOCUMENT
A SEPARATE PROJECT APPLICATION FOR CONSTRUCTION IS REQUIRED.

MANUFACTURER PROFESSIONAL OF RECORD ON PC

LICENSED ARCHITECT
ANDREW PATRICK O'HANLON
No. C12631
Ren. 3-31-25
STATE OF CALIFORNIA

THESE DRAWINGS ARE PRELIMINARY AND NOT FOR CONSTRUCTION UNLESS STAMPED & SIGNED BY THE DESIGN PROFESSIONAL OF RECORD.

REVISIONS
1
2
3
4

DRAWN BY:	A.A.
SCALE:	AS NOTED
DATE:	DD/MM/YY
PROJECT NO:	XXXX-XX

SHEET TITLE:
LIGHT GAUGE STEEL MEMBER PROPERTIES

SHEET NUMBER:
S0.0

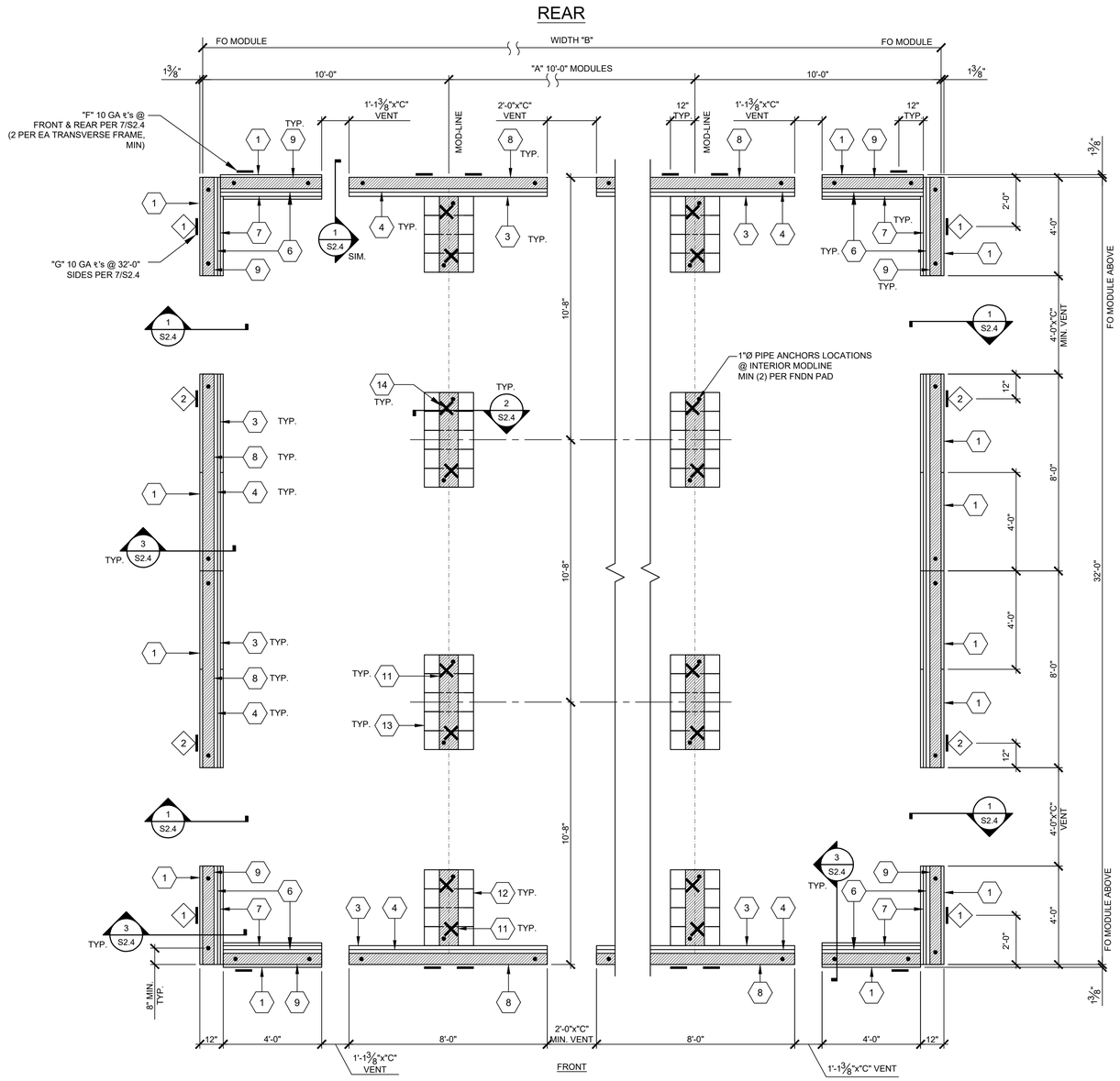

WOOD FOUNDATION PLAN (PLYWOOD FLOOR) 50 P.S.F LIVE LOAD + 15 PSF PARTITION LOAD

SCALE: 3/8"=1-0"

A

1. ½" x 12" WIDE x 48" LONG PT STRUCTURAL PLYWOOD WITH FACE GRAIN IN SHORT DIRECTION (CDX PLYWOOD)
2. NOT USED
3. SINGLE PT 2x10x8'-0" LONG ℄
4. SINGLE 2x8x8'-0" LONG
5. NOT USED
6. SINGLE 2x8x4'-0" LONG ℄
7. SINGLE 2x10x4'-0" ℄
8. MULTIPLE 2x6x8'-0" LONG NAILER AS REQ'D FOR HEIGHT
9. MULTIPLE 2x6x4'-0" LONG NAILER AS REQ'D FOR HEIGHT
10. NOT USED
11. 2x10 BLKG, SEE 2/S2.4
12. (4) 2x12x2'-0" PT ℄ OR (4) 2x10x2'-0" PT ℄ OR (5) 2x8x2'-0" PT ℄, SEE 2/S2.4
13. (4) 2x12x2'-0" PT ℄ OR (5) 2x10x2'-0" PT ℄ OR (6) 2x8x2'-0" PT ℄, SEE 2/S2.4
14. ✕ LOCATION OF FLOOR BEAM ATTACHMENT TO ISOLATED PAD. REFER TO DETAIL 2/S2.4

● 1"Ø GALVANIZED PIPE LOCATIONS - TYPICAL. MINIMUM (2) PER FNDN SECTION AT "B" WALLS, 32' WALLS & MODLINES AS SHOWN ON PLAN

KEY NOTES

ON SOIL:
1"Ø STANDARD WEIGHT (1.315 ACTUAL O.D.) HOT DIPPED GALV. PIPE w/ 12" MIN. PENETRATION MEASURED VERTICALLY BELOW SOIL SURFACE @ 10'-0" O.C., MIN. 2 EA. 2x ℄. DRILL SILL 1⅜"Ø MAX. PIPE MAY BE DRIVEN MAX 45° ANGLE TO VERTICAL.

ON A/C PAVING:
1"Ø STANDARD WEIGHT (1.315 ACTUAL O.C.) HOT DIPPED GALV. PIPE w/ 12" MIN. PENETRATION MEASURED VERTICALLY BELOW PAVING SURFACE @ 10'-0" O.C., MIN. 2 EA 2x ℄. DRILL SILL 1⅜"Ø MAX.

ON CONC PAVING:
1"Ø STANDARD WEIGHT (1.315 ACTUAL O.D.) HOT DIPPED GALV. PIPE w/ 12" MIN. PENETRATION MEASURED VERTICALLY BELOW PAVING SURFACE @ 10'-0" O.C., MIN. 2 EA. 2x ℄. DRILL SILL 1⅜"Ø MAX.
ALT: SIMPSON SS (STAINLESS STEEL) STRONG-BOLT 2'S THRU SILL ℄ w/ MIN. CONC. EMBEDMENT PER SCHEDULE BELOW (PROVIDE A MINIMUM OF 2 BOLTS AT 2x PLATE LESS THAN 5'-0" AND 4 BOLTS AT 2x PLATE LARGER THAN 5'-0").
ANCHOR BOLTS SHALL BE CENTERED ON THE 2x PLATES AND LOCATED NO CLOSER THAN 4" FROM THE END OF THE PLATES.

SIMPSON SS STRONG-BOLT 2 O.C. SPACING SCHEDULE (IN.)

BUILDING SIZE	MAX. LONGITUDINAL SPACING @ 32' SIDEWALLLS	MAX. LONGITUDINAL SPACING @ MODLINES	MAX. TRANSVERSE SPACING
☒ 30'x32'	119	26	32
☐ 40'x32'	119	26	33
☐ 50'x32'	119	26	33
☐ 60'x32'	119	26	34

ANCHOR TYPE	SIMPSON SS STRONG-BOLT 2 ICC ESR-3037
ANCHOR SIZE (IN.)	½"ø
MIN. CONC. THICKNESS (IN.)	4½"
MIN. NOMINAL EMBED (IN.)	2¾"
MIN. HOLE DEPTH (IN.)	3"
MIN. CONC. EDGE DISTANCE - ANY DIRECTION (IN.)	6½"
INSTALLATION TORQUE (FT-LB)	65

1. TORQUE TEST PER CBC 1910A.5 TORQUE TEST - MANUFACTURER'S RECOMMENDED INSTALLATION TORQUE AS APPROVED IN AN ICC-ESR PER C.B.C 1910A.5

SILL RESTRAINT

BUILDING SIZE (FT)	TOTAL # OF 10' WIDE MODULES	"A" TOTAL # OF CENTER MODULES	"B" TOTAL FNDN WIDTH	TOTAL FLOOR AREA (FT^2)	NET FREE VENT AREA REQ'D (FT^2)	"C" MINIMUM HT OF VENTS (IN)	NET FREE VENT AREA PROVIDED @ 0.73 CLR COVERAGE PER SHEET NOTES (FT^2)	"D" GALV. NAIL O.C. SPACING (IN) (32' WALLS) SEE 3/S2.4	"E" GALV. NAIL O.C. SPACING (IN) ("B" WALLS) SEE 3/S2.4	"F" # OF 10 GA. SHEAR ℄'S @ FRONT & REAR SEE 3/2.4	"G" # OF 10 GA. SHEAR ℄'S @ SIDES (32' WALLS) SEE 3/S2.4		"H" EDGE NAIL (EN) SPACING (IN) (32' WALLS) SEE 3/S2.4	"J" EDGE NAIL (EN) SPACING (IN) ("B" WALLS) SEE 3/S2.4	"K" # OF ALT. SHEAR ℄'S @ "B" WALLS (2 MIN PER MOD.) SEE 5/S2.4	"L" GALV. NAIL O.C. SPACING (IN) (MODLINES) SEE 2/S2.4
											# OF ℄'S	℄ LOCATIONS				
☒ 30'x32'	3	1	30'-0"	960	6.4	4.5	6.7	12	10	6/SIDE	4/SIDE	1 2	6	4	6/SIDE	10
☐ 40'x32'	4	2	40'-0"	1280	8.5	6.0	10.4	12	10	8/SIDE	4/SIDE	1 2	6	4	8/SIDE	10
☐ 50'x32'	5	3	50'-0"	1600	10.7	6.0	11.8	12	10	10/SIDE	4/SIDE	1 2	6	4	10/SIDE	10
☐ 60'x32'	6	4	60'-0"	1920	12.8	6.0	13.3	12	10	12/SIDE	4/SIDE	1 2	6	4	12/SIDE	10

MODULE SCHEDULE - 60' x 32' MAX

B

1. TOP OF WOOD PADS TO BE LEVEL.
2. DO NOT INSTALL BUILDINGS IN AREAS OF WATER LINES.
3. SITE TO BE GRADED TO PREVENT WATER PONDING BENEATH THE STRUCTURE.
4. FOUNDATION WOOD TO BE CUT PERPENDICULAR TO THE FACE GRAIN.
5. PER THE CONTRACT OF THIS PROJECT- THE BUILDING PAD MUST BE A MINIMUM OF 38'-0" FRONT TO REAR, BUILDING WIDTH PLUS 6'-0" SIDE TO SIDE AND SHALL NOT EXCEED 6" OUT OF LEVEL IN ANY DIRECTION.
6. PROJECT ARCHITECT SHOULD VERIFY THE NET AREA OF THE VENT COVER BE EQUAL TO OR LARGER THAN THE VENT AREA REQUIRED SHOWN ON THE TABLE.
7. VENT NET AREA REQUIRED (NFA) IS BASED ON A 1:150 VENTILATION RATIO OF THE NOMINAL BUILDING FLOOR AREA. VENT NFA PROVIDED IS THE ACTUAL VENT GROSS OPEN AREA WITH A MINIMUM REDUCTION PERCENTAGE OF 73% DUE TO THE VENT COVER.

FOUNDATIONS:

ALL FOUNDATION MATERIALS IN CONTACT WITH THE GROUND SHALL BE PRESSURE TREATED OR REDWOOD EXCEPT SHIMS MAY BE REDWOOD, HEM FIR OR CEDAR. PRESSURE TREATED DOUGLAS FIR, HEM FIR, PLYWOOD ETC. SHALL BE VERIFIED BY A CERTIFICATE OF TREATMENT STATING: "THE MATERIAL IN THIS UNIT WAS TREATED PER 2022 CALIFORNIA BUILDING CODE. ALL MATERIAL FOR USE IN GROUND CONTACT SHALL BE STAMPED "FOR GROUND CONTACT" (U1 & T1). ALL MATERIAL NOT USED IN GROUND CONTACT SHALL BE HF#2 OR DF#2 "FOR ABOVE GROUND USE." THE IN-PLANT INSPECTOR SHALL VERIFY THAT ALL PRESSURE TREATED FOUNDATION MATERIAL IS CUT FROM AWPA STAMPED STOCK AND THAT ALL CUTS AND HOLES ARE RETREATED PER SPECIFICATIONS. U1 AND T1 MATERIAL SHALL BE BANDED SEPARATELY FOR SHIPMENT TO THE JOB SITE. THE IN-PLANT INSPECTOR'S VERIFICATION OF EACH BANDED UNIT SHALL BE ATTACHED TO THE MATERIAL. CONCRETE OR CONCRETE BLOCK FOUNDATIONS ARE NOT ALLOWED. THE FOOTING DESIGN SHALL PROVIDE FOR SHIMS AND BLOCKS NECESSARY TO PERMIT INSTALLATION ON SITES NOT LEVEL, BUT WITHIN TOLERANCE ALLOWED. INSTALLATION SHALL BE PERMITTED ON EITHER SOIL, CONCRETE OR A/C PAVING, HAVING SUITABLE DESIGN BEARING CAPACITY, THE BUILDINGS SHALL BE SECURELY FASTENED TO THE FOUNDATIONS. THE FOUNDATIONS AND THE METHOD OF FASTENING SHALL BE SUBJECT TO APPROVAL BY THE ARCHITECT AND DSA. PADS SHALL BE DESIGNED FOR A MAXIMUM OF 1000 PSF LOAD ON THE SOIL. PADS SHALL NOT BE PLACED ON TURF.

A VAPOR RETARDING MOISTURE BARRIER SHALL BE INSTALLED UNDER THE FLOOR WHEN THE BUILDING IS INSTALLED LESS THAN 12" ABOVE THE SOIL. A BARRIER IS NOT REQUIRED AT HEIGHT IF THE BUILDING IS INSTALLED OVER CONCRETE (INCLUDING A RAT SLAB) OR A/C/ PAVING.

SHEET NOTES

IDENTIFICATION STAMP
DIV. OF THE STATE ARCHITECT
APP: 02-122533 INC:
REVIEWED FOR
SS ☑ FLS ☑ ACS ☑
DATE: 05/22/2024

AMS
American Modular Systems
787 Spreckels Ave., Manteca, CA 95336
Phone (209) 825-1921 Fax (209) 825-7018
www.americanmodular.com

INTELLECTUAL-PROPERTY & PROPRIETARY RIGHTS STATEMENT
COPYRIGHT © AMERICAN MODULAR SYSTEMS (AMS)
AMS OWNS ALL COPYRIGHT AND OTHER INTELLECTUAL-PROPERTY AND PROPRIETARY RIGHTS IN THESE DRAWINGS, SPECIFICATIONS, AND THE MATERIAL CONTAINED HEREIN. CERTAIN ELEMENTS SHOWN IN THESE DOCUMENTS ARE REGISTERED TRADEMARKS OF AMS. ALL PATENTABLE MATERIALS CONTAINED IN THESE DOCUMENTS AND ORIGINATING WITH AMS WILL REMAIN THE SOLE PROPERTY OF AMS. THESE DRAWING, SPECIFICATIONS AND THE MATERIAL CONTAINED HEREIN MAY NOT BE REPRODUCED, TRANSMITTED, COPIED, DISTRIBUTED, MODIFIED, OR OTHERWISE DISPOSED OF (DIRECTLY OR INDIRECTLY) AND MAY NOT BE USED (IN WHOLE OR IN PART) TO ASSIST IN THE CONSTRUCTION, DESIGN, OR OTHER MAKING OF, OR FOR THE PURPOSE OF FURNISHING ANY INFORMATION FOR THE CONSTRUCTION, DESIGN, OR OTHER MAKING OF, ANY BUILDINGS (MODULAR OR OTHERWISE), DRAWINGS, SPECIFICATIONS, PRINTS, APPARATUS, OR PARTS THEREOF, EXCEPT AS EXPRESSLY PERMITTED BY WRITTEN CONSENT OF, OR IN A WRITTEN AGREEMENT WITH, AMS. SUBMITTAL OR DISTRIBUTION TO MEET OFFICIAL REGULATORY REQUIREMENTS WILL NOT BE CONSTRUED AS PUBLICATION IN DEROGATION OF AMS'S COPYRIGHT OR OTHER INTELLECTUAL-PROPERTY OR PROPRIETARY RIGHTS.

PRE-CHECKED SET NAME

30' x 32' THRU 60' x 32'

2GO

SITE SPECIFIC PROJECT NAME

.
.
.

APPROVED
DIV. OF THE STATE ARCHITECT
APP: 04-122041 PC
REVIEWED FOR
SS ☑ FLS ☑ ACS ☑ CG ☑
DATE: 04/05/2024

☐ 2022 CBC PRE-CHECK (PC) DOCUMENT
A SEPARATE PROJECT APPLICATION FOR CONSTRUCTION IS REQUIRED.

MANUFACTURER PROFESSIONAL OF RECORD ON PC

LICENSED ARCHITECT
ANTHONY PATRICK CARLSON
No. C 12631
Ren. 3-31-25
STATE OF CALIFORNIA

THESE DRAWINGS ARE PRELIMINARY AND NOT FOR CONSTRUCTION UNLESS STAMPED & SIGNED BY THE DESIGN PROFESSIONAL OF RECORD.

REVISIONS

1
2
3
4

DRAWN BY:	A.A.
SCALE:	AS NOTED
DATE:	DD/MM/YY
PROJECT NO:	XXXX-XX

SHEET TITLE:

WOOD FOUNDATION PLAN
50 PSF LIVE LOAD + 15 PSF
PARTITION LOAD

SHEET NUMBER:

S2.1

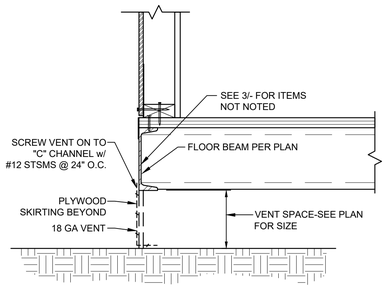

FOUNDATION DETAIL SCALE: 1 1/2"=1-0" 1

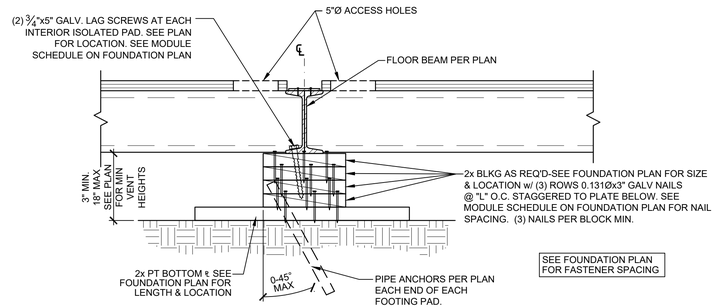

FOUNDATION DETAIL SCALE: 1 1/2"=1-0" 2

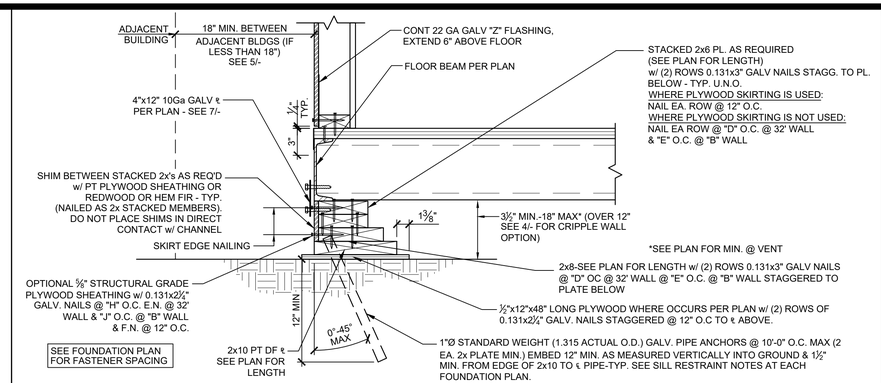

FOUNDATION DETAIL SCALE: 1 1/2"=1-0" 3

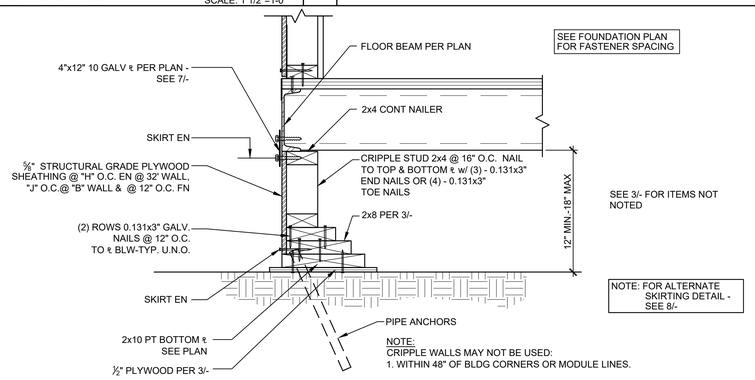

FOUNDATION DETAIL SCALE: 1 1/2"=1-0" 4

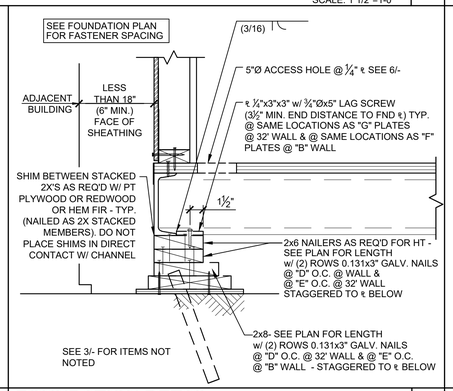

FOUNDATION DETAIL SCALE: 1 1/2"=1-0" 5

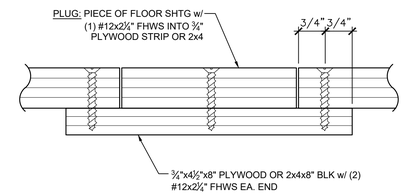

FILLER ACCESS HOLE DETAIL SCALE: 1 1/2"=1-0" 6

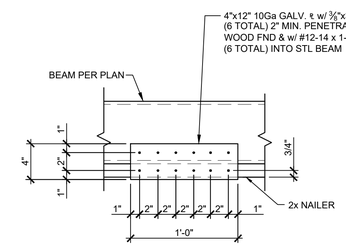

NOTES:
1. PLATE MAY BE INSTALLED OVER SKIRTING
2. SELF-TAPPING SCREWS EXPOSED TO WEATHER SHALL BE ITW BUILDEX TEKS SELECT STRUCTURAL FASTENERS (ICC ESR-3223) OR EQUAL.

FOUNDATION DETAIL SCALE: 1 1/2"=1-0" 7

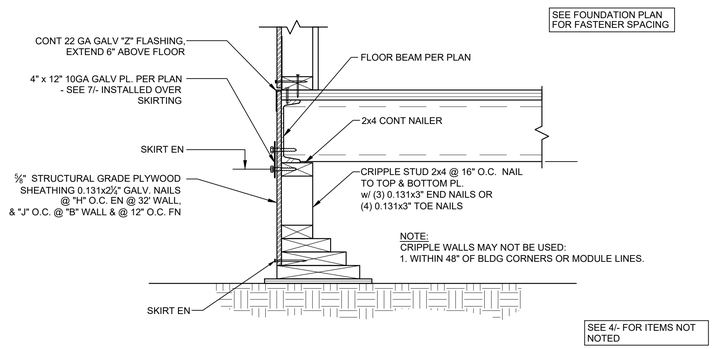

ALTERNATE SKIRTING DETAIL SCALE: 1 1/2"=1-0" 8

NOT USED 9

NOT USED 10

NOT USED 11

NOT USED 12

NOT USED 13

NOT USED 14

NOT USED 15

NOT USED 16

IDENTIFICATION STAMP
DIV. OF THE STATE ARCHITECT
APP: 02-122533 INC:
REVIEWED FOR
SS ☑ FLS ☑ ACS ☑
DATE: 05/22/2024

AMS
American Modular Systems
787 Spreckels Ave., Manteca, CA 95336
Phone (209) 825-1921 Fax (209) 825-7018
www.americanmodular.com

INTELLECTUAL-PROPERTY & PROPRIETARY RIGHTS STATEMENT
COPYRIGHT © AMERICAN MODULAR SYSTEMS (AMS)
AMS OWNS ALL COPYRIGHT AND OTHER INTELLECTUAL-PROPERTY AND PROPRIETARY RIGHTS IN THESE DRAWINGS, SPECIFICATIONS, AND THE MATERIAL CONTAINED HEREIN. CERTAIN ELEMENTS SHOWN IN THESE DOCUMENTS ARE REGISTERED TRADEMARKS OF AMS. ALL PATENTABLE MATERIALS CONTAINED IN THESE DOCUMENTS AND ORIGINATING WITH AMS WILL REMAIN THE SOLE PROPERTY OF AMS. THESE DRAWING, SPECIFICATIONS AND THE MATERIAL CONTAINED HEREIN MAY NOT BE REPRODUCED, TRANSMITTED, COPIED, DISTRIBUTED, MODIFIED, OR OTHERWISE DISPOSED OF (DIRECTLY OR INDIRECTLY) AND MAY NOT BE USED (IN WHOLE OR IN PART) TO ASSIST IN THE CONSTRUCTION, DESIGN, OR OTHER MAKING OF, OR FOR THE PURPOSE OF FURNISHING ANY INFORMATION FOR THE CONSTRUCTION, DESIGN, OR OTHER MAKING OF, ANY BUILDINGS (MODULAR OR OTHERWISE), DRAWINGS, SPECIFICATIONS, PRINTS, APPARATUS, OR PARTS THEREOF, EXCEPT AS EXPRESSLY PERMITTED BY WRITTEN CONSENT OF, OR IN A WRITTEN AGREEMENT WITH, AMS. SUBMITTAL OR DISTRIBUTION TO MEET OFFICIAL REGULATORY REQUIREMENTS WILL NOT BE CONSTRUED AS PUBLICATION IN DEROGATION OF AMS'S COPYRIGHT OR OTHER INTELLECTUAL-PROPERTY OR PROPRIETARY RIGHTS.

PRE-CHECKED SET NAME

30' x 32' THRU 60' x 32'

2GO

SITE SPECIFIC PROJECT NAME

.
.
.

APPROVED
DIV. OF THE STATE ARCHITECT
APP: 04-122041 PC
REVIEWED FOR
SS ☑ FLS ☑ ACS ☑ CG ☑
DATE: 04/05/2024

☐ 2022 CBC PRE-CHECK (PC) DOCUMENT
A SEPARATE PROJECT APPLICATION FOR CONSTRUCTION IS REQUIRED.

MANUFACTURER PROFESSIONAL OF RECORD ON PC

LICENSED ARCHITECT
ANTHONY PATRICK GARGANO
No. C12631
Ren. 3-31-25
STATE OF CALIFORNIA

THESE DRAWINGS ARE PRELIMINARY AND NOT FOR CONSTRUCTION UNLESS STAMPED & SIGNED BY THE DESIGN PROFESSIONAL OF RECORD.

REVISIONS

1
2
3
4

DRAWN BY:	A.A.
SCALE:	AS NOTED
DATE:	DD/MM/YY
PROJECT NO:	XXXX-XX

SHEET TITLE:

WOOD FOUNDATION DETAILS

SHEET NUMBER:

S2.4

REAR

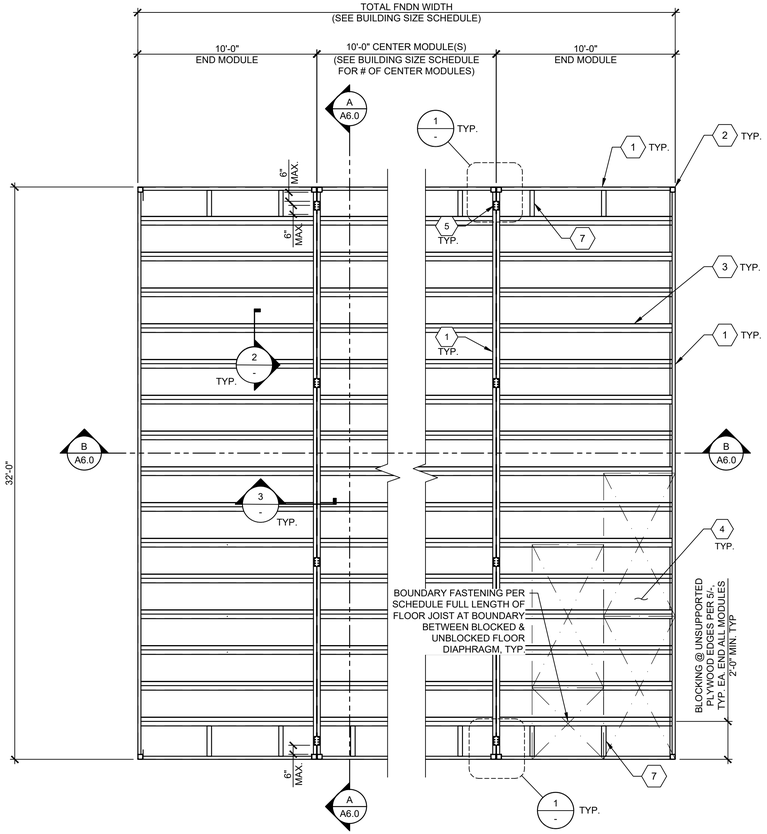

FRONT

FOR 'B' OFFICE OCCUPANCIES 12 GA FLOOR JOISTS MUST BE USED

FLOOR JOIST SCHEDULE		
LIVE LOAD PSF	14 GA. JOIST	12 GA. JOIST
☐ 50 PSF	24" O.C.	24" O.C.
☒ 50+15 PSF	24" O.C.	24" O.C.
☐ 100 PSF	24" O.C.	24" O.C.

NOTES:
FOR SECTION PROPERTIES - SEE S0.0.
EITHER 14GA OR 12GA ARE ACCEPTABLE BASED ON CURRENT AVAILABILITIES.

FRAMING PLAN (PLYWOOD FLOOR) SCALE : 1/4" = 1'-0" A

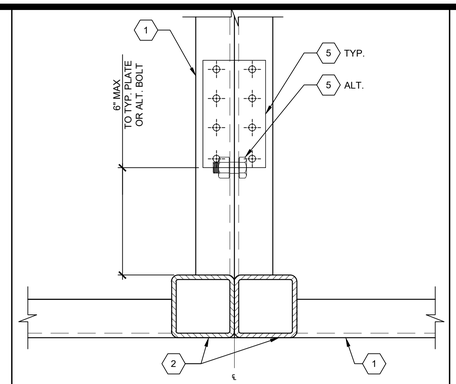

TYP. FLOOR BEAMS CONNECTION SCALE : 3" = 1'-0" 1

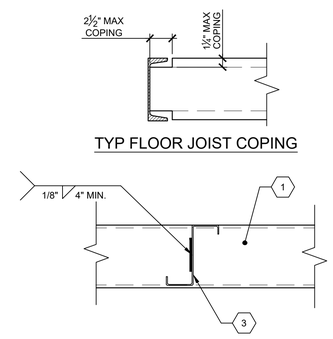

TYP FLOOR JOIST COPING

TYP. JOIST ATTACTMENT TO BEAM SCALE : 3" = 1'-0" 2

1. FLOOR BEAM PER SHEET S5.0.
   USE SINGLE SIZE CHANNEL THROUGHOUT FLOOR SYSTEM.
2. HSS COLUMN PER SHEET S5.0
3. FLOOR JOIST - SEE SCHEDULE
4. 1⅛" T&G PLYWOOD FLOOR SHTG STURDI-I-FLOOR 48" O.C. SPAN RATING EXP. 1 CONFORMING TO PS 1-19, 2 SPANS MIN. OPTION: UNI-FLOOR BY PITTSBURGH TESTING LAB CONFORMING TO PS 1-19. STAGGER SHEETS 48" O.C. AS SHOWN w/ FACE GRAIN PERPENDICULAR TO FLOOR JOISTS. FASTEN PER SCHEDULES.
5. PLATE ¼"x3½"x6" @ 10'-0" O.C. MAX w/ (8) #12x1" SDSTS; SEE DETAIL 3/-.
   ALTERNATE: ½"Øx1½" MB @ 10'-0" O.C. MAX AND 6" MAX FROM EACH END OF MODULE. BOLT Ø $\frac{9}{16}$" MAX HOLE THRU CHANNELS; SEE DETAIL 3/-.
6. NOT USED
7. 2¾"x2¾"x 14Ga. BLOCKING ANGLE PER DETAIL 5/-, AT UNSUPPORTED PLYWOOD EDGES WHERE SPECIFIED ON THE FLOOR FRAMING PLAN.

KEY NOTES

1. NOT USED
2. THE MATERIAL THICKNESS OF LIGHT GAUGE STRUCTURAL MEMBERS, IN THEIR END-USE, SHALL MEET OR EXCEED THE MINIMUM BASE METAL THICKNESS SPECIFIED ON SHEET S0.O. THE MATERIAL GAUGE DESIGNATION IN THE PLAN SHALL BE USED AS REFERENCE ONLY.
3. SDSTS PER ASTM C1513 AND ICC ESR-1976 (OR EQUAL)
4. ET&F PINS PER IAPMO REPORT ER-335

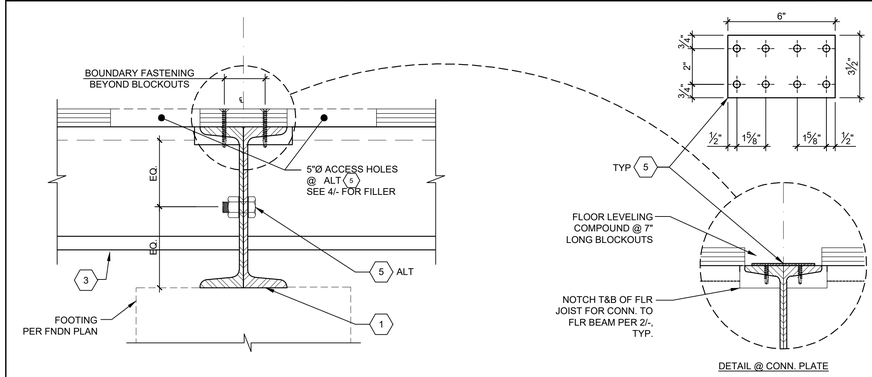

TYP. BEAM TO BEAM CONNECTION SCALE : 3" = 1'-0" 3

GENERAL NOTES

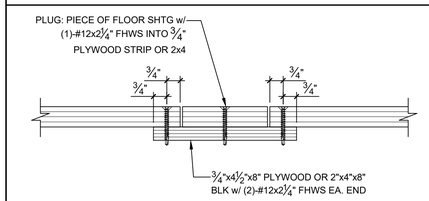

TYP. ACCESS HOLE FILLER SCALE : 3" = 1'-0" 4

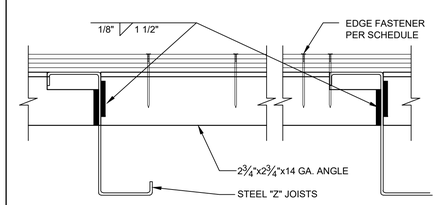

OPTIONAL BLOCKING ANGLE ATTACHMENT SCALE : 3" = 1'-0" 5

NOT USED 6

BUILDING SIZE SCHEDULE			
BUILDING SIZE	TOTAL # OF 10'-0" WIDE MODULES	TOTAL # OF CENTER MODULES	TOTAL FNDN WIDTH
☒ 30'x32'	3	1	30'-0¾"
☐ 40'x32'	4	2	40'-1"
☐ 50'x32'	5	3	50'-1¼"
☐ 60'x32'	6	4	60'-1½"

BUILDING SIZE SCHEDULE

BOUNDARY FASTENING*	EDGE FASTENING	FIELD FASTENING
#10 OR #12 x 2 ¼" SDSTS	0.144"Øx2" ET&F PINS	0.144"Øx2" ET&F PINS
6" O.C.	6" O.C.	12" O.C.

*BOUNDARY FASTENING IS APPLIED TO PERIMETER OF ALL MODULES ALONG FRAME LINES

NOTES:
SCHEDULE APPLIES TO ALL FLOOR LIVE LOADS.
REFER TO GENERAL NOTE #3 FOR ICC ESR#

TYPICAL FASTENER SPACING SCHEDULE

BOUNDARY FASTENING*	EDGE FASTENING	FIELD FASTENING
#10 OR #12 x 2 ¼" SDSTS	#10 OR #12 x 2 ¼" SDSTS	#10 OR #12 x 2 ¼" SDSTS
6" O.C.	6" O.C.	12" O.C.

*BOUNDARY FASTENING IS APPLIED TO PERIMETER OF ALL MODULES ALONG FRAME LINES

NOTES:
SCHEDULE APPLIES TO ALL FLOOR LIVE LOADS.
REFER TO GENERAL NOTE #3 FOR ICC ESR#

ALTERNATE FASTENER SPACING SCHEDULE

NOT USED 7

IDENTIFICATION STAMP
DIV. OF THE STATE ARCHITECT
APP: 02-122533 INC:
REVIEWED FOR
SS ☑ FLS ☑ ACS ☑
DATE: 05/22/2024

American Modular Systems
787 Spreckels Ave., Manteca, CA 95336
Phone (209) 825-1921 Fax (209) 825-7018
www.americanmodular.com

INTELLECTUAL-PROPERTY & PROPRIETARY RIGHTS STATEMENT
COPYRIGHT © AMERICAN MODULAR SYSTEMS (AMS)
AMS OWNS ALL COPYRIGHT AND OTHER INTELLECTUAL-PROPERTY AND PROPRIETARY RIGHTS IN THESE DRAWINGS, SPECIFICATIONS, AND THE MATERIAL CONTAINED HEREIN. CERTAIN ELEMENTS SHOWN IN THESE DOCUMENTS ARE REGISTERED TRADEMARKS OF AMS. ALL PATENTABLE MATERIALS CONTAINED IN THESE DOCUMENTS AND ORIGINATING WITH AMS WILL REMAIN THE SOLE PROPERTY OF AMS. THESE DRAWING, SPECIFICATIONS AND THE MATERIAL CONTAINED HEREIN MAY NOT BE REPRODUCED, TRANSMITTED, COPIED, DISTRIBUTED, MODIFIED, OR OTHERWISE DISPOSED OF (DIRECTLY OR INDIRECTLY) AND MAY NOT BE USED (IN WHOLE OR IN PART) TO ASSIST IN THE CONSTRUCTION, DESIGN, OR OTHER MAKING OF, OR FOR THE PURPOSE OF FURNISHING ANY INFORMATION FOR THE CONSTRUCTION, DESIGN, OR OTHER MAKING OF, ANY BUILDINGS (MODULAR OR OTHERWISE), DRAWINGS, SPECIFICATIONS, PRINTS, APPARATUS, OR PARTS THEREOF, EXCEPT AS EXPRESSLY PERMITTED BY WRITTEN CONSENT OF, OR IN A WRITTEN AGREEMENT WITH, AMS. SUBMITTAL OR DISTRIBUTION TO MEET OFFICIAL REGULATORY REQUIREMENTS WILL NOT BE CONSTRUED AS PUBLICATION IN DEROGATION OF AMS'S COPYRIGHT OR OTHER INTELLECTUAL-PROPERTY OR PROPRIETARY RIGHTS.

PRE-CHECKED SET NAME

30' x 32' THRU 60' x 32'

2GO

SITE SPECIFIC PROJECT NAME

APPROVED
DIV. OF THE STATE ARCHITECT
APP: 04-122041 PC
REVIEWED FOR
SS ☑ FLS ☑ ACS ☑ CG ☑
DATE: 04/05/2024

☐ 2022 CBC PRE-CHECK (PC) DOCUMENT
A SEPARATE PROJECT APPLICATION FOR CONSTRUCTION IS REQUIRED.

MANUFACTURER PROFESSIONAL OF RECORD ON PC

LICENSED ARCHITECT
REGINALD PATRICK COLLARD
No. C12631
Ren. 3-31-25
STATE OF CALIFORNIA

THESE DRAWINGS ARE PRELIMINARY AND NOT FOR CONSTRUCTION UNLESS STAMPED & SIGNED BY THE DESIGN PROFESSIONAL OF RECORD.

REVISIONS
1
2
3
4

DRAWN BY:	A.A.
SCALE:	AS NOTED
DATE:	DD/MM/YY
PROJECT NO:	XXXX-XX

SHEET TITLE:
FLOOR FRAMING PLAN
& DETAILS FOR
PLYWOOD FLOOR

SHEET NUMBER:
S3.0

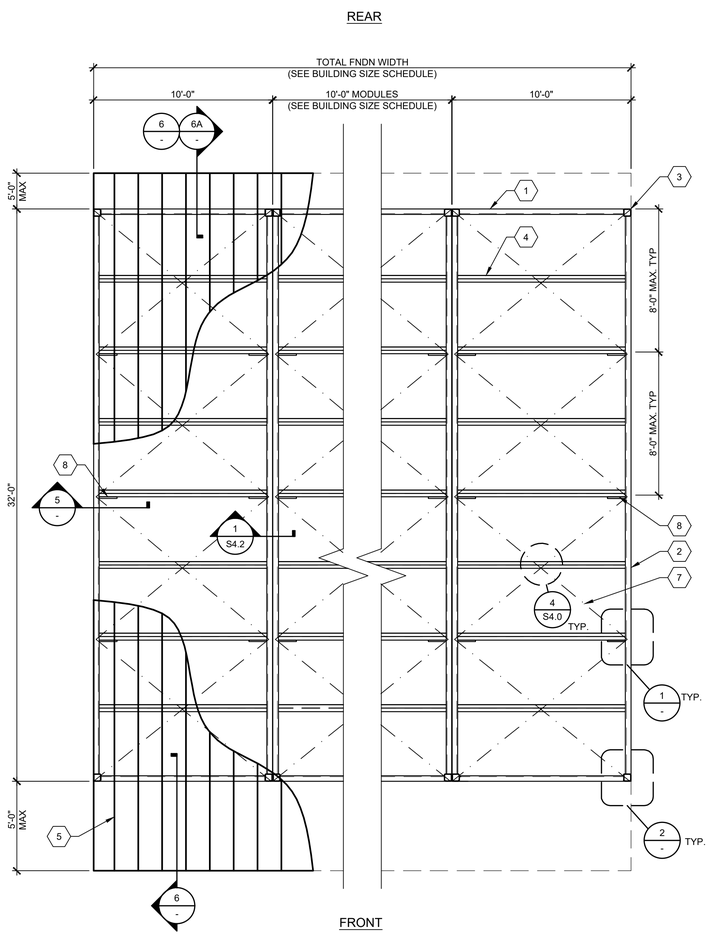

TYPICAL ROOF FRAMING LAYOUT — SCALE: 1/4"=1'-0" — A

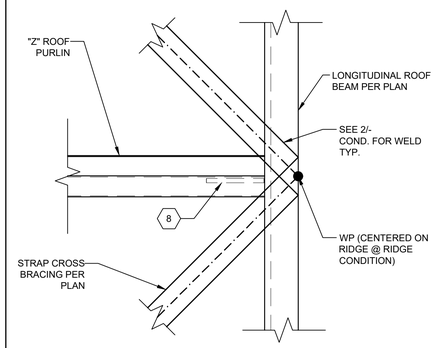

TYP. CROSS BRACING DETAILS — SCALE: 1 1/2"=1'-0" — 1

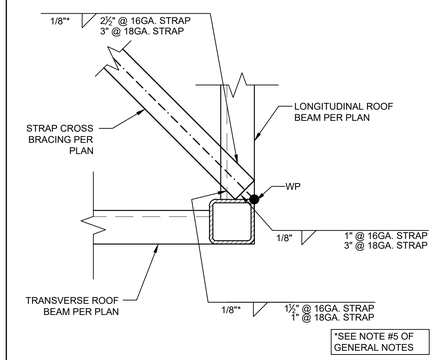

TYP. CROSS BRACING DETAILS — SCALE: 1 1/2"=1'-0" — 2

1. TRANSVERSE ROOF BEAM FOR SIZE, SEE S0.0.
2. LONGITUDINAL ROOF BEAM FOR SIZE, SEE S0.0.
3. HSS COLUMN PER SHEET S5.0.
4. ROOF PURLINS @ 48" O.C. MAX. -SEE SHEET S0.0
5. METAL ROOF PAN - SEE SHEET S0.0.
6. NOT USED
7. 2"X16 GA. STRAP CROSS BRACING GRADE 50
   ALTERNATE: CROSS BRACING 3"X18 GA. GRADE 50
   NOTE: FLAT STRAP SHALL BE PULLED TAUT, ELIMINATING ANY SAGGING OF THE STRAP, PRIOR TO THE STRAP BEING WELDED TO THE FRAMING.
8. 3x1x12 GA. BENT PLATE DIAGONAL BRACE TO ROOF BEAM @ 8'-0" O.C. MAX & AT ROOF STRAP CROSS BRACING LOCATIONS PER A/-. SEE DETAIL 5/- @ BEAMS.
   STRAPS SHALL BE INSTALL TAUT ONTO FRAMING, NO SLACK OR LOOSE AREAS.
9. NOT USED

NOT USED — 3

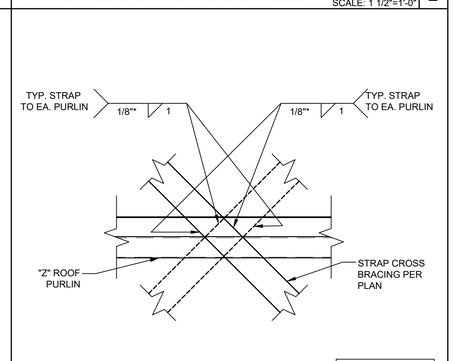

TYP. CROSS BRACING DETAILS — SCALE: 1 1/2"=1'-0" — 4

1. THE MATERIAL THICKNESS OF LIGHT GAUGE STRUCTURAL MEMBERS IN THEIR END-USE, SHALL MEET OR EXCEED THE MINIMUM BASE METAL THICKNESS SPECIFIED ON SHEET S0.0. THE MATERIAL GAUGE DESIGNATION IN THE PLAN SHALL BE USED AS REFERENCE ONLY.
2. SEE SHEET S8.0 FOR TYP. SIDE WALL FRAMING.
3. SEE SHEET S8.0 FOR TYP. END WALL FRAMING.
4. ALL FASTENERS THRU METAL ROOF PANEL SHALL BE INSTALLED w/NEOPRENE WASHERS.
5. MAX FILLET WELD SIZE SHALL BE EQUAL TO THE THICKNESS OF THE THINNER SHEET STEEL (AWS D1.3, SECTION 2.3.3)

GENERAL NOTES

KEY NOTES

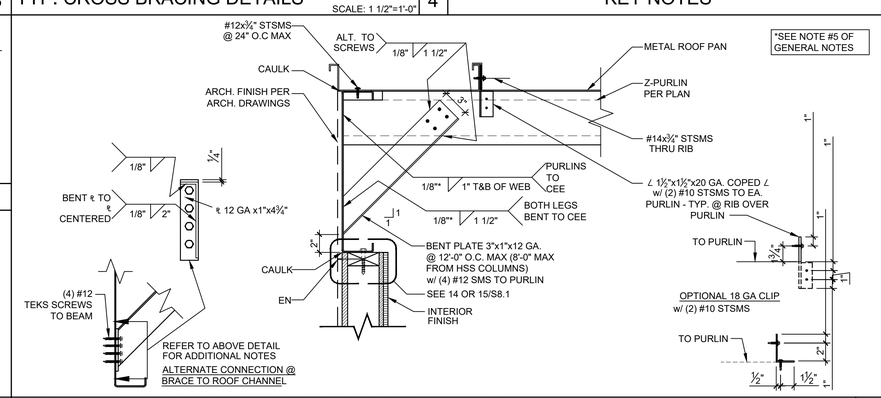

SIDE WALL TO ROOF BEAM DETAIL @ ROOF CHANNEL — SCALE: 1 1/2"=1'-0" — 5

BUILDING SIZE SCHEDULE			
BUILDING SIZE	TOTAL # OF 10'-0" WIDE MODULES	TOTAL # OF CENTER MODULES	TOTAL FNDN WIDTH
☒ 30'x32'	3	1	30'-0¾"
☐ 40'x32'	4	2	40'-1"
☐ 50'x32'	5	3	50'-1¼"
☐ 60'x32'	6	4	60'-1½"

BUILDING SIZE SCHEDULE

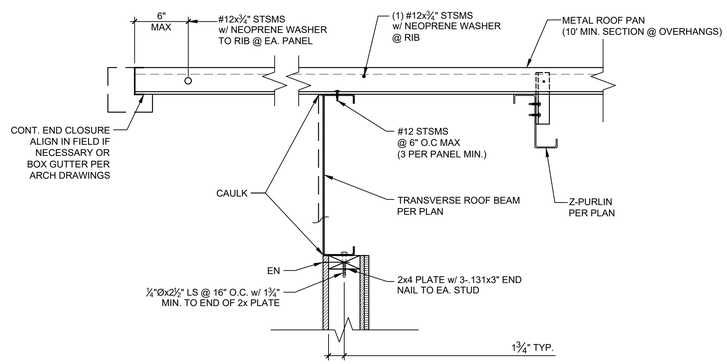

OVERHANG DETAIL — SCALE: 1 1/2"=1'-0" — 6

NOT USED — 6A

IDENTIFICATION STAMP
DIV. OF THE STATE ARCHITECT
APP: 02-122533 INC:
REVIEWED FOR
SS ☑ FLS ☑ ACS ☑
DATE: 05/22/2024

American Modular Systems
787 Spreckels Ave., Manteca, CA 95336
Phone (209) 825-1921 Fax (209) 825-7018
www.americanmodular.com

INTELLECTUAL-PROPERTY & PROPRIETARY RIGHTS STATEMENT
COPYRIGHT © AMERICAN MODULAR SYSTEMS (AMS)
AMS OWNS ALL COPYRIGHT AND OTHER INTELLECTUAL-PROPERTY AND PROPRIETARY RIGHTS IN THESE DRAWINGS, SPECIFICATIONS, AND THE MATERIAL CONTAINED HEREIN. CERTAIN ELEMENTS SHOWN IN THESE DOCUMENTS ARE REGISTERED TRADEMARKS OF AMS. ALL PATENTABLE MATERIALS CONTAINED IN THESE DOCUMENTS AND ORIGINATING WITH AMS WILL REMAIN THE SOLE PROPERTY OF AMS. THESE DRAWING, SPECIFICATIONS AND THE MATERIAL CONTAINED HEREIN MAY NOT BE REPRODUCED, TRANSMITTED, COPIED, DISTRIBUTED, MODIFIED, OR OTHERWISE DISPOSED OF (DIRECTLY OR INDIRECTLY) AND MAY NOT BE USED (IN WHOLE OR IN PART) TO ASSIST IN THE CONSTRUCTION, DESIGN, OR OTHER MAKING OF, OR FOR THE PURPOSE OF FURNISHING ANY INFORMATION FOR THE CONSTRUCTION, DESIGN, OR OTHER MAKING OF, ANY BUILDINGS (MODULAR OR OTHERWISE), DRAWINGS, SPECIFICATIONS, PRINTS, APPARATUS, OR PARTS THEREOF, EXCEPT AS EXPRESSLY PERMITTED BY WRITTEN CONSENT OF, OR IN A WRITTEN AGREEMENT WITH, AMS. SUBMITTAL OR DISTRIBUTION TO MEET OFFICIAL REGULATORY REQUIREMENTS WILL NOT BE CONSTRUED AS PUBLICATION IN DEROGATION OF AMS'S COPYRIGHT OR OTHER INTELLECTUAL-PROPERTY OR PROPRIETARY RIGHTS.

PRE-CHECKED SET NAME

30' x 32' THRU 60' x 32'

2GO

SITE SPECIFIC PROJECT NAME

APPROVED
DIV. OF THE STATE ARCHITECT
APP: 04-122041 PC
REVIEWED FOR
SS ☑ FLS ☑ ACS ☑ CG ☑
DATE: 04/05/2024

☐ 2022 CBC PRE-CHECK (PC) DOCUMENT
A SEPARATE PROJECT APPLICATION FOR CONSTRUCTION IS REQUIRED.

MANUFACTURER PROFESSIONAL OF RECORD ON PC

LICENSED ARCHITECT — ANTHONY PATRICK CARLSON — No. C12631 — Ren. 3-31-25 — STATE OF CALIFORNIA

THESE DRAWINGS ARE PRELIMINARY AND NOT FOR CONSTRUCTION UNLESS STAMPED & SIGNED BY THE DESIGN PROFESSIONAL OF RECORD.

REVISIONS

DRAWN BY:	A.A.
SCALE:	AS NOTED
DATE:	DD/MM/YY
PROJECT NO:	XXXX-XX

SHEET TITLE:

ROOF FRAMING PLAN & DETAILS

SHEET NUMBER:

S4.0

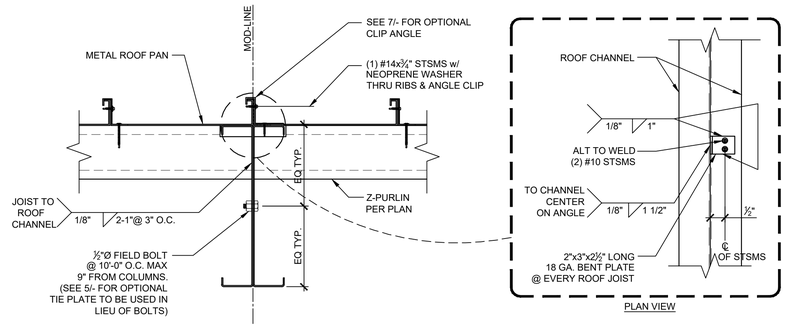

ROOF BEAM CONNECTION DETAIL — SCALE: 1 1/2"=1'-0" — 1

NOT USED — SCALE: 1 1/2"=1'-0" — 2

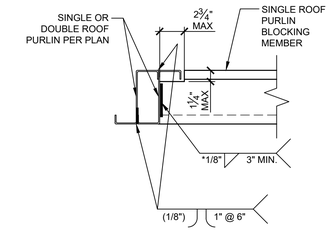

*NOTE: SEE NOTE #1 OF GENERAL NOTES

BLOCKING & DBL PURLIN CONNECTION DETAIL — SCALE: 1 1/2"=1'-0" — 3

NOT USED — SCALE: 1 1/2"=1'-0" — 4

NOT USED — 5

NOT USED — 6

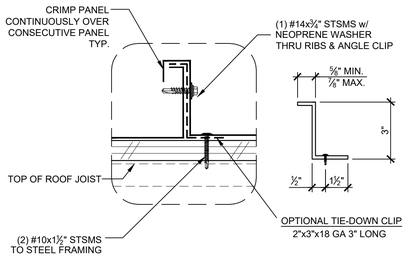

NOTE:
MECHANICALLY CRIMP EACH STANDING SEAM ENTIRELY.
MECHANICALLY CRIMP PANELS OVER ALL CLIPS.

ROOF DETAIL (OPTIONAL ROOF PAN CLIP) — SCALE: 1 1/2"=1'-0" — 7

NOT USED — 8

NOT USED — 9

NOT USED — 10

NOT USED — 11

NOT USED — 12

NOT USED — 13

NOT USED — 14

NOT USED — 15

1. THE MATERIAL THICKNESS OF LIGHT GAUGE STRUCTURAL MEMBERS, IN THEIR END-USE, SHALL MEET OR EXCEED THE MINIMUM BASE METAL THICKNESS SPECIFIED ON SHEET S0.0 THE MATERIAL GAGE DESIGNATION IN THE PLAN SHALL BE USED AS REFERENCE ONLY.

GENERAL NOTES

IDENTIFICATION STAMP
DIV. OF THE STATE ARCHITECT
APP: 02-122533 INC:
REVIEWED FOR
SS ☑ FLS ☑ ACS ☑
DATE: 05/22/2024

AMS®
American Modular Systems
787 Spreckels Ave., Manteca, CA 95336
Phone (209) 825-1921 Fax (209) 825-7018
www.americanmodular.com

INTELLECTUAL-PROPERTY & PROPRIETARY RIGHTS STATEMENT
COPYRIGHT © AMERICAN MODULAR SYSTEMS (AMS)
AMS OWNS ALL COPYRIGHT AND OTHER INTELLECTUAL-PROPERTY AND PROPRIETARY RIGHTS IN THESE DRAWINGS, SPECIFICATIONS, AND THE MATERIAL CONTAINED HEREIN. CERTAIN ELEMENTS SHOWN IN THESE DOCUMENTS ARE REGISTERED TRADEMARKS OF AMS. ALL PATENTABLE MATERIALS CONTAINED IN THESE DOCUMENTS AND ORIGINATING WITH AMS WILL REMAIN THE SOLE PROPERTY OF AMS. THESE DRAWING, SPECIFICATIONS AND THE MATERIAL CONTAINED HEREIN MAY NOT BE REPRODUCED, TRANSMITTED, COPIED, DISTRIBUTED, MODIFIED, OR OTHERWISE DISPOSED OF (DIRECTLY OR INDIRECTLY) AND MAY NOT BE USED (IN WHOLE OR IN PART) TO ASSIST IN THE CONSTRUCTION, DESIGN, OR OTHER MAKING OF, OR FOR THE PURPOSE OF FURNISHING ANY INFORMATION FOR THE CONSTRUCTION, DESIGN, OR OTHER MAKING OF, ANY BUILDINGS (MODULAR OR OTHERWISE), DRAWINGS, SPECIFICATIONS, PRINTS, APPARATUS, OR PARTS THEREOF, EXCEPT AS EXPRESSLY PERMITTED BY WRITTEN CONSENT OF, OR IN A WRITTEN AGREEMENT WITH, AMS. SUBMITTAL OR DISTRIBUTION TO MEET OFFICIAL REGULATORY REQUIREMENTS WILL NOT BE CONSTRUED AS PUBLICATION IN DEROGATION OF AMS'S COPYRIGHT OR OTHER INTELLECTUAL-PROPERTY OR PROPRIETARY RIGHTS.

PRE-CHECKED SET NAME
30' x 32' THRU 60' x 32'
2GO®

SITE SPECIFIC PROJECT NAME
.
.
.

APPROVED
DIV. OF THE STATE ARCHITECT
APP: 04-122041 PC
REVIEWED FOR
SS ☑ FLS ☑ ACS ☑ CG ☑
DATE: 04/05/2024

☐ 2022 CBC PRE-CHECK (PC) DOCUMENT
A SEPARATE PROJECT APPLICATION FOR CONSTRUCTION IS REQUIRED.

MANUFACTURER PROFESSIONAL OF RECORD ON PC

LICENSED ARCHITECT
ANDREW PATRICK CLEMENT HOWARD
No. C12631
Ren. 3-31-25
STATE OF CALIFORNIA

THESE DRAWINGS ARE PRELIMINARY AND NOT FOR CONSTRUCTION UNLESS STAMPED & SIGNED BY THE DESIGN PROFESSIONAL OF RECORD.

REVISIONS
1
2
3
4

DRAWN BY:	A.A.
SCALE:	AS NOTED
DATE:	DD/MM/YY
PROJECT NO:	XXXX-XX

SHEET TITLE:
ROOF FRAMING DETAILS

SHEET NUMBER:
S4.2

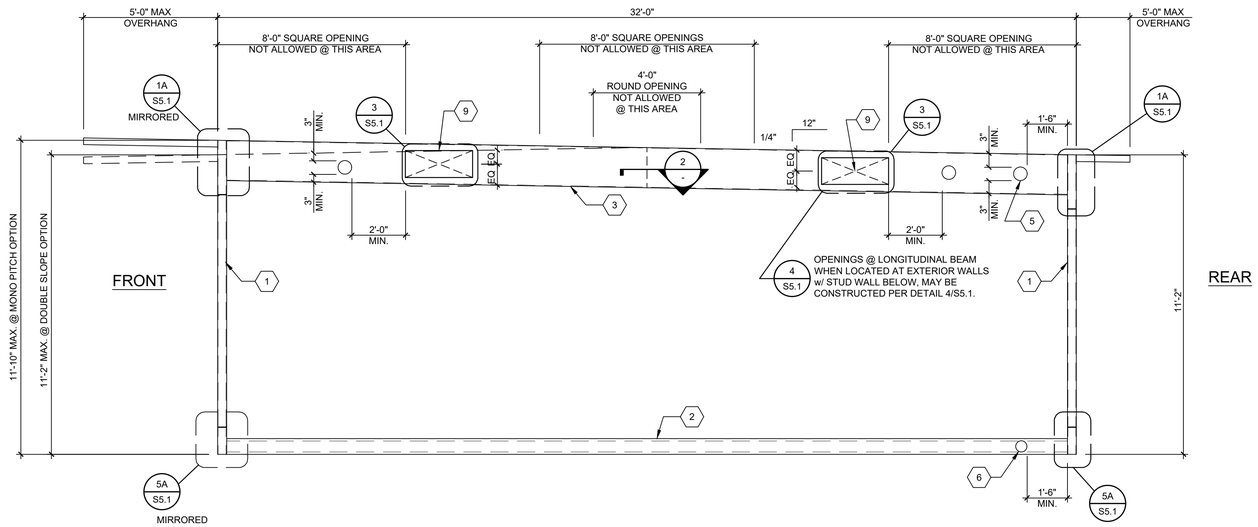

TYPICAL LONGITUDINAL FRAME ELEVATION

SCALE: 3/8"=1'-0" | 1

1. HSS COLUMN - SEE SCHEDULE 3/- BELOW.
2. FLOOR BEAM - SEE SCHEDULE 3/- BELOW.
3. LONGITUDINAL ROOF BEAM - SEE SCHEDULE 3/- BELOW.
4. TRANSVERSE ROOF BEAM - SEE SCHEDULE 3/- BELOW.
5. 6"Ø MAX OPENING IN WEB OF ROOF BEAM WITHOUT WEB REINFORCEMENT MINIMUM SPACING OF HOLES @ 48" O.C., HOLES MAY OCCUR @ ANY LOCATION ALONG LENGTH OF ROOF BEAM EXCEPT AS NOTED OTHERWISE ON FRAMING ELEVATION. - SEE 6/S5.1.

   NOTE: IF HOLE IS 3" OR LESS, THEY MAY BE SPACED @ 24" O.C. MINIMUM.
6. 4"Ø MAX OPENING IN WEB OF FLOOR BEAM WITHOUT WEB REINFORCEMENT MINIMUM SPACING OF HOLES @ 48" O.C. HOLES MAY OCCUR @ ANY LOCATION ALONG LENGTH OF FLOOR BEAM WITH DIRECT FOUNDATION SUPPORT BELOW. OPENINGS ARE NOT ALLOWED WHERE BEAMS ARE SPANNING BETWEEN FOUNDATIONS OR ACROSS VENT OPENINGS. - SEE 6/S5.1.

   NOTE: IF HOLE IS 2" OR LESS, THEY MAY BE SPACED @ 24" O.C. MINIMUM.
7. NOT USED.
8. NOT USED.
9. LONGITUDINAL BEAM OPENING: REFER TO DETAIL 3/S5.1 FOR OPENING REINFORCEMENT (10"x18" MAX OPENING SIZE).
10. TRANSVERSE BEAM OPENING: REFER TO DETAIL 4/S5.1 FOR OPENING REINFORCEMENT (10"x30" MAX OPENING SIZE).

KEY NOTES

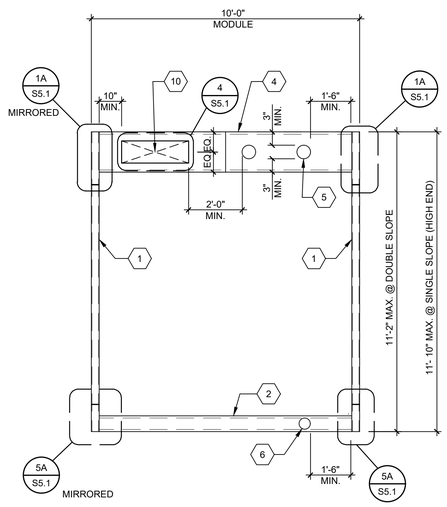

TYPICAL TRANSVERSE FRAME ELEVATION

SCALE : 3/8"=1'-0" | 4

THE WELDING PROCEDURE QUALIFICATION TEST RECORD AND WELDING PROCEDURE SPECIFICATION FOR THIS WELD SHALL BE PREPARED IN ACCORDANCE WITH AWS D1.1-10 & D1.3-08 AND SUBMITTED TO THE STRUCTURAL ENGINEER FOR REVIEW AND SUBMITTAL TO THE D.S.A. TYPICAL ALL DETAILS THIS SHEET. ALL WELDS USED IN PRIMARY MEMBERS AND CONNECTIONS IN THE LATERAL FORCE-RESISTING SYSTEMS SHALL BE MADE WITH FILLER METAL THAT HAS A MINIMUM CHARPY V-NOTCHTOUGHNESS OF 20 FT.-LBS AT ZERO DEGREES F, AS DETERMINED BY AWS CLASSIFICATION.

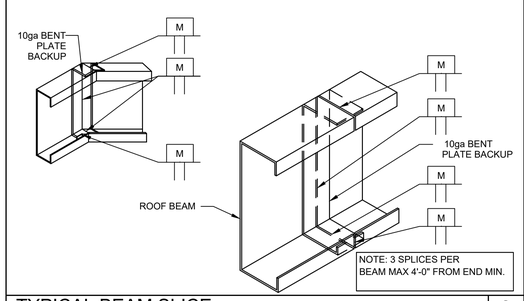

TYPICAL BEAM SLICE

SCALE: 1 1/2"=1'-0" | 2

FLOOR BEAMS	COLUMNS	LONGITUDINAL ROOF CHANNEL	TRANSVERSE ROOF CHANNEL
C7x9.8	HSS 4x4x½ (ASTM A1085) Fy = 50ksi	10 GA.	10 GA.

NOTE: SEE ALL SECTION PROPERTIES ON SHEET S0.0

FRAME MEMBER SCHEDULE

3

NOT USED

SCALE: 1 1/2"=1'-0" | 5

NOT USED

3

IDENTIFICATION STAMP
DIV. OF THE STATE ARCHITECT
APP: 02-122533 INC:
REVIEWED FOR
SS ☑ FLS ☑ ACS ☑
DATE: 05/22/2024

American Modular Systems
787 Spreckels Ave., Manteca, CA 95336
Phone (209) 825-1921 Fax (209) 825-7018
www.americanmodular.com

INTELLECTUAL-PROPERTY & PROPRIETARY RIGHTS STATEMENT
COPYRIGHT © AMERICAN MODULAR SYSTEMS (AMS)
AMS OWNS ALL COPYRIGHT AND OTHER INTELLECTUAL-PROPERTY AND PROPRIETARY RIGHTS IN THESE DRAWINGS, SPECIFICATIONS, AND THE MATERIAL CONTAINED HEREIN. CERTAIN ELEMENTS SHOWN IN THESE DOCUMENTS ARE REGISTERED TRADEMARKS OF AMS. ALL PATENTABLE MATERIALS CONTAINED IN THESE DOCUMENTS AND ORIGINATING WITH AMS WILL REMAIN THE SOLE PROPERTY OF AMS. THESE DRAWING, SPECIFICATIONS, AND THE MATERIAL CONTAINED HEREIN MAY NOT BE REPRODUCED, TRANSMITTED, COPIED, DISTRIBUTED, MODIFIED, OR OTHERWISE DISPOSED OF (DIRECTLY OR INDIRECTLY) AND MAY NOT BE USED (IN WHOLE OR IN PART) TO ASSIST IN THE CONSTRUCTION, DESIGN, OR OTHER MAKING OF, OR FOR THE PURPOSE OF FURNISHING ANY INFORMATION FOR THE CONSTRUCTION, DESIGN, OR OTHER MAKING OF, ANY BUILDINGS (MODULAR OR OTHERWISE), DRAWINGS, SPECIFICATIONS, PRINTS, APPARATUS, OR PARTS THEREOF, EXCEPT AS EXPRESSLY PERMITTED BY WRITTEN CONSENT OF, OR IN A WRITTEN AGREEMENT WITH, AMS. SUBMITTAL OR DISTRIBUTION TO MEET OFFICIAL REGULATORY REQUIREMENTS WILL NOT BE CONSTRUED AS PUBLICATION IN DEROGATION OF AMS'S COPYRIGHT OR OTHER INTELLECTUAL-PROPERTY OR PROPRIETARY RIGHTS.

PRE-CHECKED SET NAME

30' x 32' THRU 60' x 32'

2GO®

SITE SPECIFIC PROJECT NAME

.
.
.

APPROVED
DIV. OF THE STATE ARCHITECT
APP: 04-122041 PC
REVIEWED FOR
SS ☑ FLS ☑ ACS ☑ CG ☑
DATE: 04/05/2024

☐ 2022 CBC PRE-CHECK (PC) DOCUMENT
A SEPARATE PROJECT APPLICATION FOR CONSTRUCTION IS REQUIRED.

MANUFACTURER PROFESSIONAL OF RECORD ON PC

LICENSED ARCHITECT
ANDREW PATRICK O'HANLON
No. C12631
Ren. 3-31-25
STATE OF CALIFORNIA

THESE DRAWINGS ARE PRELIMINARY AND NOT FOR CONSTRUCTION UNLESS STAMPED & SIGNED BY THE DESIGN PROFESSIONAL OF RECORD.

REVISIONS

1
2
3
4

DRAWN BY:	A.A.
SCALE:	AS NOTED
DATE:	DD/MM/YY
PROJECT NO:	XXXX-XX

SHEET TITLE:

MOMENT FRAME ELEVATIONS & DETAILS

SHEET NUMBER:

S5.0

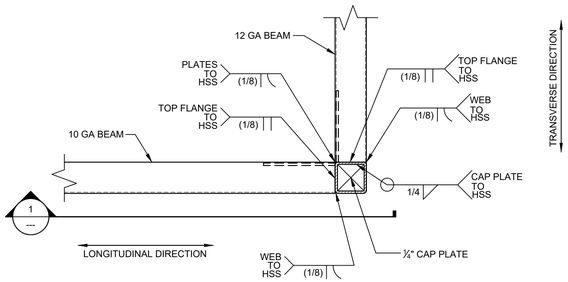

PLAN VIEW

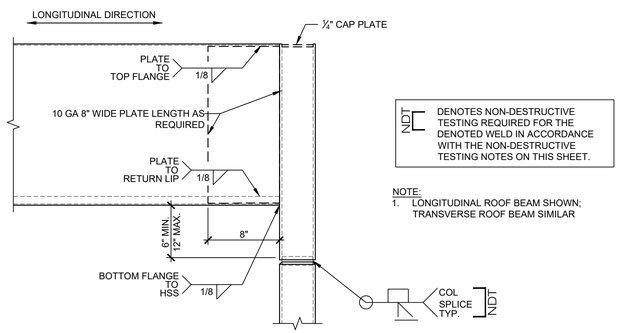

NOTE:
1. LONGITUDINAL ROOF BEAM SHOWN; TRANSVERSE ROOF BEAM SIMILAR

1 SECTION VIEW

TYPICAL ROOF CHANNEL TO HSS DETAIL

SCALE: 1 1/2"=1'-0"

1A

NOT USED

1B

THE WELDING PROCEDURE QUALIFICATION TEST RECORD AND WELDING PROCEDURE SPECIFICATION FOR WELDS ON THIS SHEET SHALL BE PREPARED IN ACCORDANCE WITH AWS D1.1-15 (HOT-ROLLED), D1.3-08 (COLD-FORMED) & D1.8-16 AND SUBMITTED TO THE STRUCTURAL ENGINEER FOR REVIEW AND SUBMITTAL TO D.S.A. UPON REQUEST. ALL WELDS USED IN PRIMARY MEMBERS AND CONNECTIONS IN THE LATERAL FORCE-RESISTING SYSTEMS SHALL BE MADE WITH FILLER METAL THAT HAS A MINIMUM CHARPY V-NOTCH TOUGHNESS OF 20 FT.-LBS AT ZERO DEGREES F, AS DETERMINED BY AWS CLASSIFICATION.

GENERAL NOTES

NON-DESTRUCTIVE TESTING OF COMPLETE JOINT PENETRATION GROVE WELDS AT THE MOMENT-RESISTING BEAM-TO-COLUMN CONNECTIONS SHALL COMPLY WITH AISC 341-16 CHAPTER J PER CBC 1705A.2.1.

1. WELDS SUBJECT TO THE REQUIREMENTS OF NON-DESTRUCTIVE TESTING ARE NOTED ON THESE DRAWINGS WITH THE SYMBOL: NDT
2. ALL WELDS DESIGNATED FOR NON-DESTRUCTIVE TESTING REQUIRE MAGNETIC PARTICLE TESTING (MT) TO BE PERFORMED ON 25% OF THOSE WELDS.
3. ULTRASONIC TESTING (UT) IS TO BE PERFORMED ON 100% OF WELDS DENOTED WITH THE SYMBOL UT, AND IS ONLY REQUIRED ON THOSE DESIGNATED WELDS.
4. ULTRASONIC TESTING (UT) IS ONLY REQUIRED WHERE THE THICKNESS OF THE COLUMN IS 5/16" OR GREATER. UT IS NOT REQUIRED WHERE THE COLUMN THICKNESS IS LESS THAN 5/16". MAGNETIC PARTICLE TESTING (MT) IS STILL REQUIRED.
5. ULTRASONIC TESTING (UT) IS NOT REQUIRED ON WELDS FROM STRUCTURAL STEEL CHANNEL BEAM FLANGES TO COLUMNS AS UT TESTING IS NOT APPROPRIATE FOR SECTIONS WITH VARYING DEPTHS. MAGNETIC PARTICLE TESTING (MT) IS STILL REQUIRED.

NON-DESTRUCTIVE TESTING NOTES

1. FILLER METALS SHALL CONFORM TO THE REQUIREMENTS OF THE AISC SEISMIC PROVISIONS.
2. WELDING PROCEDURES SHALL BE IN ACCORDANCE WITH THE AISC SEISMIC PROVISIONS.
3. QUALITY CONTROL AND QUALITY ASSURANCE SHALL BE IN ACCORDANCE WITH THE AISC SEISMIC PROVISIONS.
4. WELD ACCESS HOLES SHALL BE IN ACCORDANCE WITH AISC 360-16, SECTION J1.6, AND SHALL BE CONSTRUCTED PER THE FOLLOWING DETAILS & NOTES.

WELD ACCESS HOLE GEOMETRY

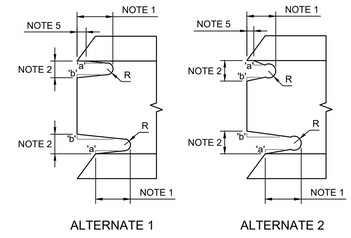

ALTERNATE 1 ALTERNATE 2

NOTES: THESE ARE TYPICAL DETAILS FOR JOINTS WELDED FROM ONE SIDE AGAINST STEEL BACKING WHERE WELD ACCESS HOLES ARE REQUIRED.

1) LENGTH: GREATER OF 1.5tw (WEB THICKNESS) OR 1-1/2 IN. (38 MM)
2) HEIGHT: GREATER OF 1.0tw OR 3/4 IN. (19 MM) BUT NEED NOT EXCEED 2 IN. (50 MM)
3) R: 3/8 IN. MIN. (10 MM). GRIND THE THERMALLY CUT SURFACES OF WELD ACCESS HOLES IN HEAVY SHAPES AS DEFINED IN SECTIONS A3.1(c) AND (d) OF AISC 360-16.
4) THE 'a' FORMS A TRANSITION FROM THE WEB TO THE FLANGE. SLOPE 'b' MAY BE HORIZONTAL.
5) THE BOTTOM OF THE TOP FLANGE IS TO BE CONTOURED TO PERMIT THE TIGHT FIT OF BACKING BARS WHERE THEY ARE TO BE USED.

REQ. FOR FR. MOMENT CONNECTIONS

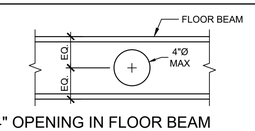

4" OPENING IN FLOOR BEAM

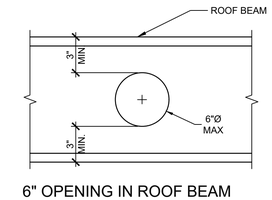

6" OPENING IN ROOF BEAM

OPENING IN BEAMS

SCALE: 1 1/2"=1'-0"

6

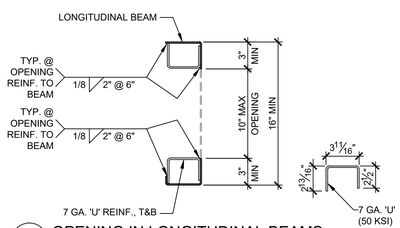

Z Z OPENING IN LONGITUDINAL BEAMS

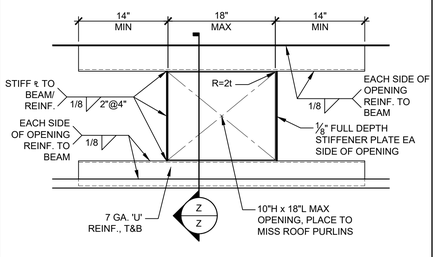

NOTES:

1. LOCATE DIAGONAL BRACE (SEE 1/S4.1) AT PURLINS CLOSEST TO EACH SIDE OF BEAM OPENING, TYP.
2. BEAM OPENING(S), LOCATED AT EXTERIOR WALLS w/ STUD WALL BELOW, MAY BE CONSTRUCTED PER DETAIL 4/S5.1.

OPENING @ ROOF BEAMS (LONGITUDINAL BEAMS)

SCALE: 1 1/2"=1'-0"

3

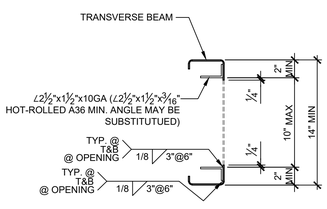

X X OPENING IN TRANSVERSE BEAMS

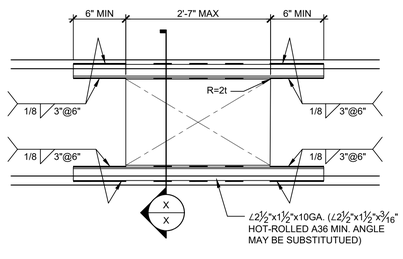

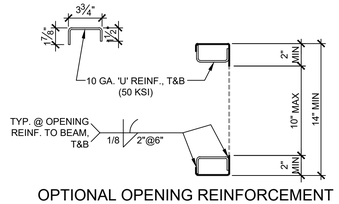

OPTIONAL OPENING REINFORCEMENT

OPENING @ ROOF BEAMS (TRANSVERSE BEAMS)

SCALE: 1 1/2"=1'-0"

4

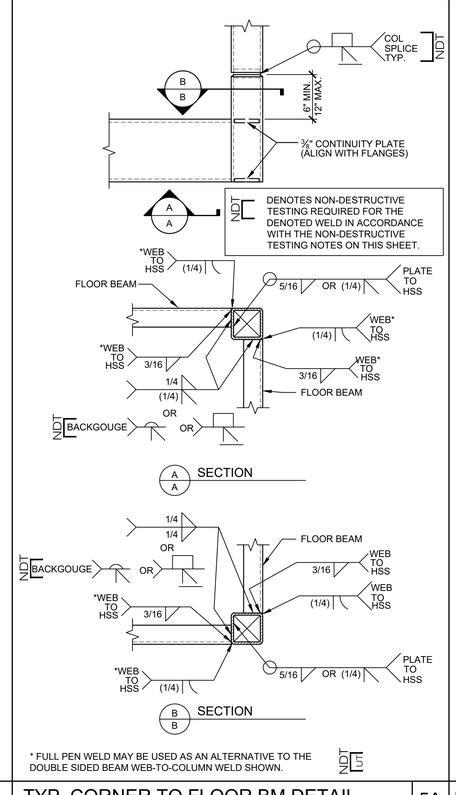

* FULL PEN WELD MAY BE USED AS AN ALTERNATIVE TO THE DOUBLE SIDED BEAM WEB-TO-COLUMN WELD SHOWN.

NDT UT

TYP. CORNER TO FLOOR BM DETAIL

SCALE: 1 1/2"=1'-0"

5A

NOT USED

5B

IDENTIFICATION STAMP
DIV. OF THE STATE ARCHITECT
APP: 02-122533 INC:
REVIEWED FOR
SS ☑ FLS ☑ ACS ☑
DATE: 05/22/2024

American Modular Systems
787 Spreckels Ave., Manteca, CA 95336
Phone (209) 825-1921 Fax (209) 825-7018
www.americanmodular.com

INTELLECTUAL-PROPERTY & PROPRIETARY RIGHTS STATEMENT
COPYRIGHT © AMERICAN MODULAR SYSTEMS (AMS)
AMS OWNS ALL COPYRIGHT AND OTHER INTELLECTUAL-PROPERTY AND PROPRIETARY RIGHTS IN THESE DRAWINGS, SPECIFICATIONS, AND THE MATERIAL CONTAINED HEREIN. CERTAIN ELEMENTS SHOWN IN THESE DOCUMENTS ARE REGISTERED TRADEMARKS OF AMS. ALL PATENTABLE MATERIALS CONTAINED IN THESE DOCUMENTS AND ORIGINATING WITH AMS WILL REMAIN THE SOLE PROPERTY OF AMS. THESE DRAWING, SPECIFICATIONS, AND THE MATERIAL CONTAINED HEREIN MAY NOT BE REPRODUCED, TRANSMITTED, COPIED, DISTRIBUTED, MODIFIED, OR OTHERWISE DISPOSED OF (DIRECTLY OR INDIRECTLY) AND MAY NOT BE USED (IN WHOLE OR IN PART) TO ASSIST IN THE CONSTRUCTION, DESIGN, OR OTHER MAKING OF, OR FOR THE PURPOSE OF FURNISHING ANY INFORMATION FOR THE CONSTRUCTION, DESIGN, OR OTHER MAKING OF, ANY BUILDINGS (MODULAR OR OTHERWISE), DRAWINGS, SPECIFICATIONS, PRINTS, APPARATUS, OR PARTS THEREOF, EXCEPT AS EXPRESSLY PERMITTED BY WRITTEN CONSENT OF, OR IN A WRITTEN AGREEMENT WITH, AMS. SUBMITTAL OR DISTRIBUTION TO MEET OFFICIAL REGULATORY REQUIREMENTS WILL NOT BE CONSTRUED AS PUBLICATION IN DEROGATION OF AMS'S COPYRIGHT OR OTHER INTELLECTUAL-PROPERTY OR PROPRIETARY RIGHTS.

PRE-CHECKED SET NAME

30' x 32' THRU 60' x 32'

2GO

SITE SPECIFIC PROJECT NAME

APPROVED
DIV. OF THE STATE ARCHITECT
APP: 04-122041 PC
REVIEWED FOR
SS ☑ FLS ☑ ACS ☑ CG ☑
DATE: 04/05/2024

☐ 2022 CBC PRE-CHECK (PC) DOCUMENT
A SEPARATE PROJECT APPLICATION FOR CONSTRUCTION IS REQUIRED.

MANUFACTURER PROFESSIONAL OF RECORD ON PC

LICENSED ARCHITECT
ANTHONY PATRICK CARNEY
No. C12631
Ren. 3-31-25
STATE OF CALIFORNIA

THESE DRAWINGS ARE PRELIMINARY AND NOT FOR CONSTRUCTION UNLESS STAMPED & SIGNED BY THE DESIGN PROFESSIONAL OF RECORD.

REVISIONS

1
2
3
4

DRAWN BY:	A.A.
SCALE:	AS NOTED
DATE:	DD/MM/YY
PROJECT NO:	XXXX-XX

SHEET TITLE:

MOMENT FRAME CONNECTION DETAILS

SHEET NUMBER:

S5.1

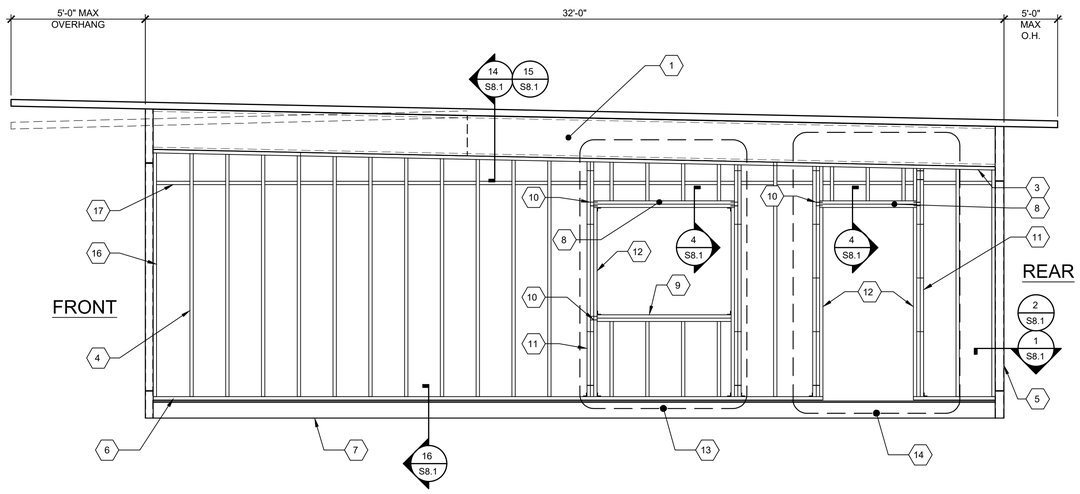

TYPICAL SIDE WALL FRAMING (MONO/DUAL PITCH) SCALE: 3/8"=1'-0" A

1. ROOF BEAM PER SHEET S5.0.
2. 2x4 PLATE, NO SPLICE
3. 2x4 PLATE
4. 2x4 STUDS SPACED PER SCHEDULE w/ (3) 0.131"Øx3" END NAILS OR (4) 0.131"Øx3" TOE NAILS T&B TO PLATES, TYP.
5. HSS COLUMN PER SHEET S5.0
6. 2x4 BOTTOM PLATE P.T. @ CONCRETE FLOORS
7. PERIMETER FLOOR BEAM PER SHEET S5.0
8. HEADER PER SCHEDULE AND DETAIL 4/S8.1
9. WINDOW SILL PER SCHEDULE
10. HEADER OR SILL TO KING STUD NAILING PER SCHEDULE
11. KING STUDS PER SCHEDULE
12. 2x4 TRIMMER
13. OPTIONAL WINDOW OPENING FRAMING PER SCHEDULE (REFER TO 4/- FOR DETAILS AND FLOOR PLANS FOR LOCATIONS)
14. OPTIONAL DOOR OPENING FRAMING PER SCHEDULE (REFER TO 5/- FOR DETAILS AND FLOOR PLANS FOR LOCATIONS)
15. HVAC OPENING @ EXTERIOR WALL (600# MAX WT.)
16. 2x NAILER
17. FIRE BLOCKING VERTICALLY AT THE CEILING AND FLOOR LEVELS PER CBC 718.2

KEY NOTES

EXTERIOR WALL SCHEDULE				
FINISH TYPE	FOUNDATION TYPE	WALL FINISH COMMENTS	STUD TYPE	STUD SPACING TYPICAL
7/8" PLYWOOD SHEATHING 303 CONFORMING TO PS1-19. VERTICAL GROOVES @ 8" O.C.	WOOD	WALL FINISH PER A5.0 & A5.1; JOINT DETAIL PER 12/S8.1; NAILING PER BLDG SECTIONS[1,2]	HEM FIR #2 OR DOUG FIR #2	16" O.C. MAX
7/16" HARDI-LAP SIDING OVER 1/2" OSB	WOOD	WALL FINISH PER A5.2 & A5.3; JOINT DETAIL PER 12/S8.1; NAILING PER BUILDING SECTIONS[1,2]	HEM FIR #2 OR DOUG FIR #2	16" O.C. MAX

FOOTNOTES
1. ALL NAILS IN EXTERIOR APPLICATIONS SHALL BE GALVANIZED.
2. TYPICAL PLYWOOD OR OSB NAILING WHERE OCCURS: 0.131"Ø x2 1/4" GALV. NAILS @ 6" O.C. E.N. & 12" O.C. F.N. (ALL EDGES BLOCKED).

EXTERIOR WALL FINISH/WALL STUD SCHEDULE

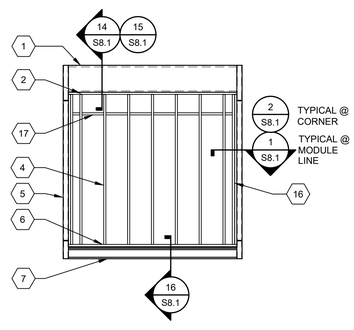

TYP. END WALL FRAMING w/ NO OPENINGS SCALE: 1/4"=1'-0" 1

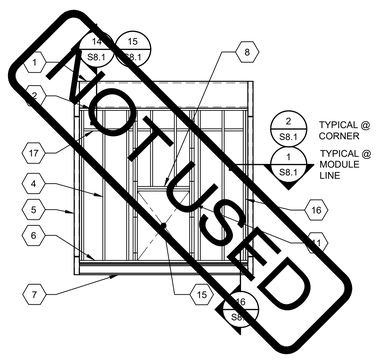

TYP. END WALL FRAMING w/ INDOOR HVAC UNIT (OPTIONAL) SCALE: 1/4"=1'-0" 2

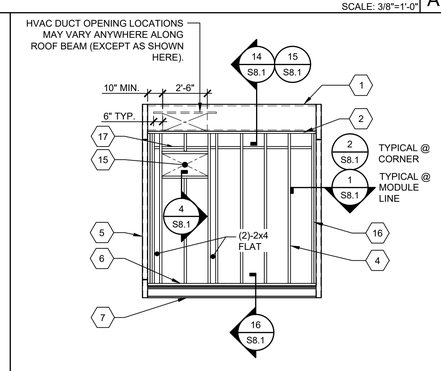

TYP. END WALL FRAMING w/ WALL HUNG HVAC UNIT (OPTIONAL) SCALE: 1/4"=1'-0" 3

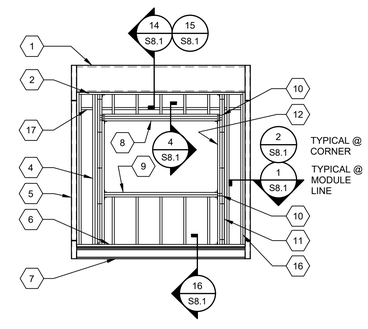

TYPICAL END WALL FRAMING WINDOW SCALE: 1/4"=1'-0" 4

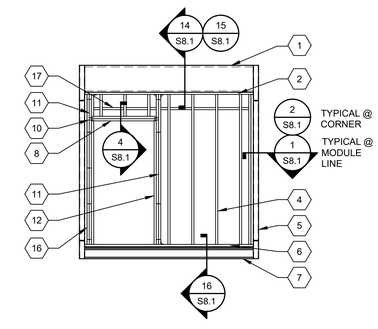

TYPICAL END WALL FRAMING w/ DOOR SCALE: 1/4"=1'-0" 5

DOOR/WINDOW OPENINGS AT TYPICAL WALL								
					HEADER TO KING STUD NAILS		WINDOW SILL TO KING STUD NAILS	
OPENING SIZE	HEADER	WINDOW SILL[2] (AS APPLICABLE)	KING STUDS[1]	KING STUD INTERNAILING	# END NAILS 1ST KING STUD TO HEADER[3] (0.131"Øx3" NAILS)	# FACE NAILS KIND STUD TO KING STUD @ HEADER (0.131"Øx3"NAILS)	# END NAILS 1ST KING STUD TO SILL[3] (0.131"Øx3" NAILS)	# FACE NAILS KING STUD TO KING STUD @ SILL (0.131"Øx3" NAILS)
>8'-0" TO 10'-0"	(4) 2x4	(3) 2x4	(4) 2x4	0.131x3" NAILS @ 12" O.C. MAX STAGGERED	8	4	6	2
>6'-0" TO 8'-0"	(4) 2x4	(2) 2x4	(4) 2x4		8	4	4	2
>4'-0" TO 6'-0"	(3) 2x4	(2) 2x4	(3) 2x4		6	3	4	2
4'-0" OR LESS	(2) 2x4	(2) 2x4	(2) 2x4		4	2	4	2

FOOTNOTES
1. PROVIDE (2) SIMPSON A34 T&B OF KING STUDS TO PLATES FOR OPENINGS GREATER THAN 4'-0". PROVIDE (1) SIMPSON A34 T&B OF KING STUDS TO PLATES FOR OPENINGS 4'-0" OR LESS.
2. WHEN MORE THAN A SINGLE SILL PLATE IS REQUIRED, INTERNAIL w/ 0.131"Øx3" NAILS @ 12" O.C. STAGGERED.
3. (2) END NAILS PER LAMINATION MINIMUM.

OPENING SCHEDULE

IDENTIFICATION STAMP
DIV. OF THE STATE ARCHITECT
APP: 02-122533 INC:
REVIEWED FOR
SS ☑ FLS ☑ ACS ☑
DATE: 05/22/2024

American Modular Systems
787 Spreckels Ave., Manteca, CA 95336
Phone (209) 825-1921 Fax (209) 825-7018
www.americanmodular.com

INTELLECTUAL-PROPERTY & PROPRIETARY RIGHTS STATEMENT
COPYRIGHT © AMERICAN MODULAR SYSTEMS (AMS)
AMS OWNS ALL COPYRIGHT AND OTHER INTELLECTUAL-PROPERTY AND PROPRIETARY RIGHTS IN THESE DRAWINGS, SPECIFICATIONS, AND THE MATERIAL CONTAINED HEREIN. CERTAIN ELEMENTS SHOWN IN THESE DOCUMENTS ARE REGISTERED TRADEMARKS OF AMS. ALL PATENTABLE MATERIALS CONTAINED IN THESE DOCUMENTS AND ORIGINATING WITH AMS WILL REMAIN THE SOLE PROPERTY OF AMS. THESE DRAWING, SPECIFICATIONS, AND THE MATERIAL CONTAINED HEREIN MAY NOT BE REPRODUCED, TRANSMITTED, COPIED, DISTRIBUTED, MODIFIED, OR OTHERWISE DISPOSED OF (DIRECTLY OR INDIRECTLY) AND MAY NOT BE USED (IN WHOLE OR IN PART) TO ASSIST IN THE CONSTRUCTION, DESIGN, OR OTHER MAKING OF, OR FOR THE PURPOSE OF FURNISHING ANY INFORMATION FOR THE CONSTRUCTION, DESIGN, OR OTHER MAKING OF, ANY BUILDINGS (MODULAR OR OTHERWISE), DRAWINGS, SPECIFICATIONS, PRINTS, APPARATUS, OR PARTS THEREOF, EXCEPT AS EXPRESSLY PERMITTED BY WRITTEN CONSENT OF, OR IN A WRITTEN AGREEMENT WITH, AMS. SUBMITTAL OR DISTRIBUTION TO MEET OFFICIAL REGULATORY REQUIREMENTS WILL NOT BE CONSTRUED AS PUBLICATION IN DEROGATION OF AMS'S COPYRIGHT OR OTHER INTELLECTUAL-PROPERTY OR PROPRIETARY RIGHTS.

PRE-CHECKED SET NAME
30' x 32' THRU 60' x 32'
2GO®

SITE SPECIFIC PROJECT NAME
.
.
.

APPROVED
DIV. OF THE STATE ARCHITECT
APP: 04-122041 PC
REVIEWED FOR
SS ☑ FLS ☑ ACS ☑ CG ☑
DATE: 04/05/2024

☐ 2022 CBC PRE-CHECK (PC) DOCUMENT
A SEPARATE PROJECT APPLICATION FOR CONSTRUCTION IS REQUIRED.

MANUFACTURER PROFESSIONAL OF RECORD ON PC

LICENSED ARCHITECT
PATRICK CARNEY
No. C12631
Ren. 3-31-25
STATE OF CALIFORNIA

THESE DRAWINGS ARE PRELIMINARY AND NOT FOR CONSTRUCTION UNLESS STAMPED & SIGNED BY THE DESIGN PROFESSIONAL OF RECORD.

REVISIONS
1
2
3
4

DRAWN BY:	A.A.
SCALE:	AS NOTED
DATE:	DD/MM/YY
PROJECT NO:	XXXX-XX

SHEET TITLE:
WALL FRAMING ELEVATIONS & SCHEDULES - WOOD STUDS

SHEET NUMBER:
S8.0

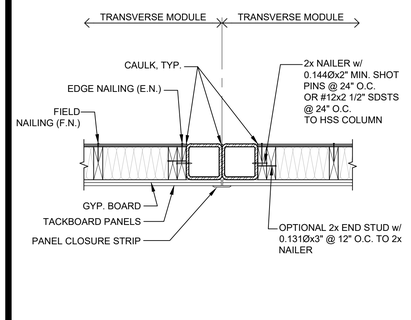

WALL TO COLUMN TYP. DETAIL @ MODLINES 1
FOR COLUMN LOCATION REFER TO ARCH. DETAILS SCALE: 1-1/2" = 1'-0"

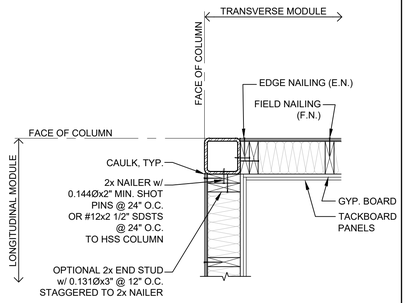

WALL TO COLUMN TYP. DETAIL @ CORNER 2
FOR COLUMN LOCATION REFER TO ARCH. DETAILS SCALE: 1-1/2" = 1'-0"

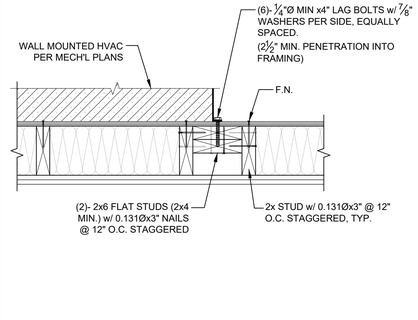

WALL HUNG HVAC ATTACHMENT DETAIL 3
SCALE: 1-1/2" = 1'-0"

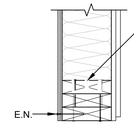

WALL HEADER DETAIL 4
SCALE: 1-1/2" = 1'-0"

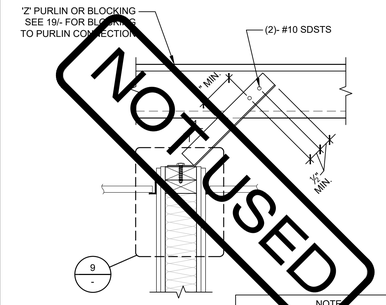

TYP. INTERIOR WALL BRACING 5
BRACE PARALLEL TO PURLINS SCALE: 1-1/2" = 1'-0"

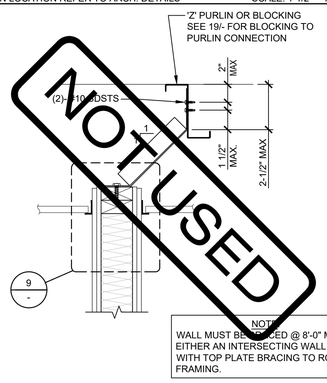

TYP. INTERIOR WALL BRACING 6
BRACE PERPENDICULAR TO PURLINS SCALE: 1-1/2" = 1'-0"

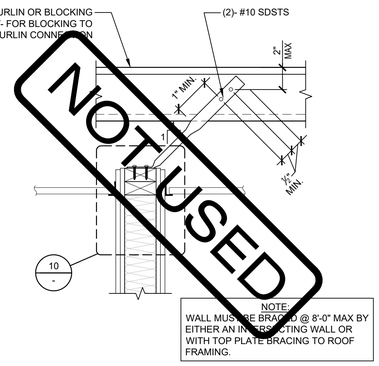

ALT. INTERIOR WALL BRACING w/ EMT BRACE 7
BRACE PARALLEL TO PURLINS SCALE: 1-1/2" = 1'-0"

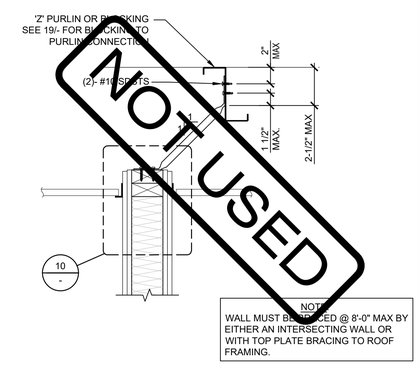

ALT. INTERIOR WALL BRACING w/ EMT BRACE 8
BRACE PERPENDICULAR TO PURLINS SCALE: 1-1/2" = 1'-0"

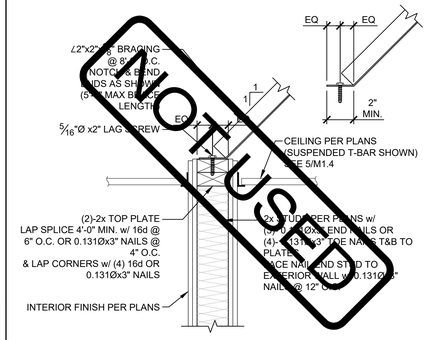

TYP. INTERIOR WALL BRACING 9
INTERIOR PARTITION BRACING SCALE: 1-1/2" = 1'-0"

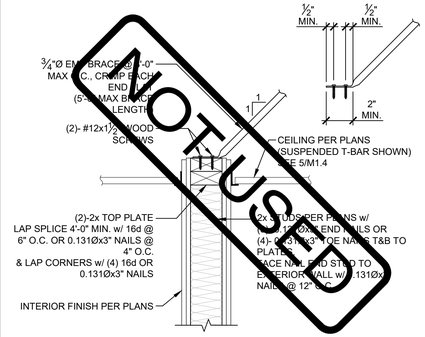

ALT. INTERIOR WALL BRACING 10
INTERIOR PARTITION BRACING w/ EMT BRACE SCALE: 1-1/2" = 1'-0"

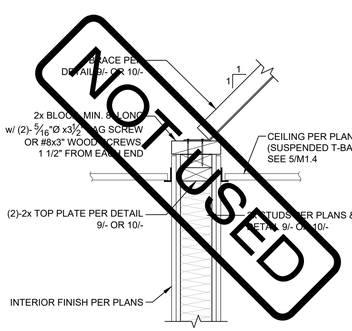

ALT. BLOCKING @ INT. WALL BRACING 11
SCALE: 1-1/2" = 1'-0"

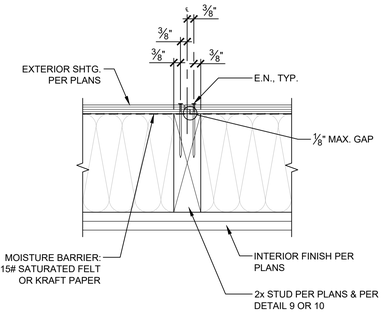

TYP. SHEATHING JOINT 12
SCALE: 1-1/2" = 1'-0"

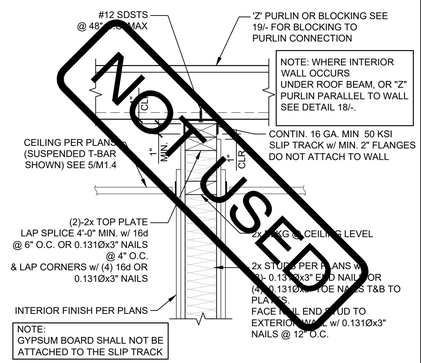

ALT. INTERIOR WALL ATTACHMENT 13
SCALE: 1-1/2" = 1'-0"

EXTERIOR WALL TO ROOF BEAM DETAIL 14
SCALE: 1-1/2" = 1'-0"

EXTERIOR WALL TO ROOF BEAM DETAIL 15
AT SHIM CONDITION SCALE: 1-1/2" = 1'-0"

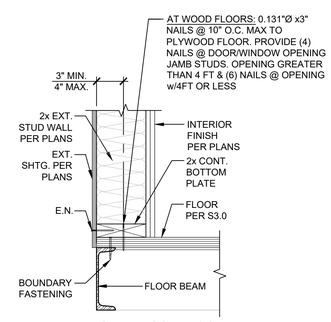

@ PLYWOOD FLOOR

FASTENER END DISTANCE: 2" MIN - 1/2" OF SPACING MAX. FROM ENDS OF PLATES, TYP.

TYP. EXTERIOR WALL TO FLOOR DETAIL 16
SCALE: 1-1/2" = 1'-0"

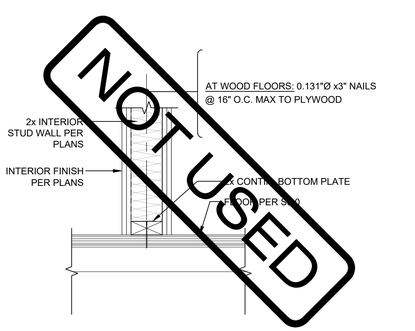

FASTENER END DISTANCE: 2" MIN - 1/2" OF SPACING MAX. FROM ENDS OF PLATES, TYP.

TYP. INTERIOR NON-BEARING WALL ATTACHMENT 17
SCALE: 1-1/2" = 1'-0"

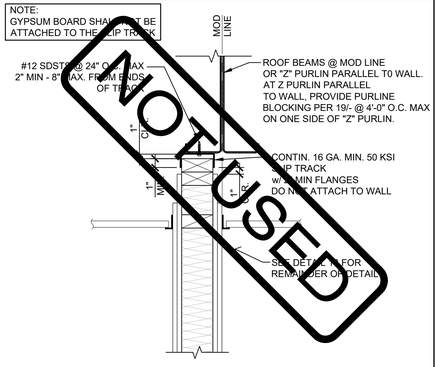

ALT. INTERIOR WALL ATTACHMENT 18
AT ROOF BEAM SCALE: 1-1/2" = 1'-0"

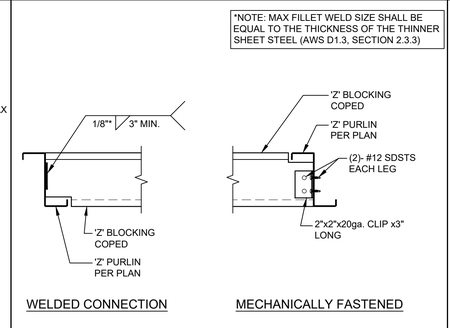

PURLIN BLOCKING DETAILS 19
SCALE: 1-1/2" = 1'-0"

TYPICAL INTERIOR NON-BEARING PARTITION WALL NOTES:

1. STUD SIZE: 2x4 MIN.
2. STUD SPACING: 16" O.C. MAX
3. WOOD SPECIES & GRADE: PER CARPENTRY NOTES SHEET N1.0 SECTION 6.
4. STUD NAILING TO T&B PLATES: (3)-0.131"Ø x 3" END NAILS OR (4)-0.131"Ø x 3" TOE NAILS.
5. DOUBLE 2x TOP PLATES: 0.131"Ø x 3" NAILS @ 16" O.C. TYP. LAP SPLICE 4'-0" MIN. w/0.131"Ø x 3" NAILS @ 4" O.C. & LAP CORNERS w/(4)-0.131"Ø x 3" NAILS.
6. INTERSECTIONS: FACE NAIL END STUD TO CROSS WALL (INCLUDING EXTERIOR WALLS) w/0.131"Ø x 3" NAILS @ 12" O.C. (ATTACH PER 2/- @ HSS COLUMNS).
7. DOOR, WINDOW, & HVAC OPENINGS: PER REQUIREMENTS FOR EXTERIOR WALLS PER SHEET S8.0 EXCEPT FRAMING MAY BE 2x4 MIN.
8. PROVIDE (1) SIMPSON A35 T&B OF KING STUDS TO PLATES @ ALL INTERIOR OPENINGS.

PURLIN BLOCKING CONNECTIONS 20

IDENTIFICATION STAMP
DIV. OF THE STATE ARCHITECT
APP: 02-122533 INC:
REVIEWED FOR
SS ☑ FLS ☑ ACS ☑
DATE: 05/22/2024

AMS®
American Modular Systems
787 Spreckels Ave., Manteca, CA 95336
Phone (209) 825-1921 Fax (209) 825-7018
www.americanmodular.com

INTELLECTUAL-PROPERTY & PROPRIETARY RIGHTS STATEMENT
COPYRIGHT © AMERICAN MODULAR SYSTEMS (AMS)
AMS OWNS ALL COPYRIGHT AND OTHER INTELLECTUAL-PROPERTY AND PROPRIETARY RIGHTS IN THESE DRAWINGS, SPECIFICATIONS, AND THE MATERIAL CONTAINED HEREIN. CERTAIN ELEMENTS SHOWN IN THESE DOCUMENTS ARE REGISTERED TRADEMARKS OF AMS. ALL PATENTABLE MATERIALS CONTAINED IN THESE DOCUMENTS AND ORIGINATING WITH AMS WILL REMAIN THE SOLE PROPERTY OF AMS. THESE DRAWING, SPECIFICATIONS, AND THE MATERIAL CONTAINED HEREIN MAY NOT BE REPRODUCED, TRANSMITTED, COPIED, DISTRIBUTED, MODIFIED, OR OTHERWISE DISPOSED OF (DIRECTLY OR INDIRECTLY) AND MAY NOT BE USED (IN WHOLE OR IN PART) TO ASSIST IN THE CONSTRUCTION, DESIGN, OR OTHER MAKING OF, OR FOR THE PURPOSE OF FURNISHING ANY INFORMATION FOR THE CONSTRUCTION, DESIGN, OR OTHER MAKING OF, ANY BUILDINGS (MODULAR OR OTHERWISE), DRAWINGS, SPECIFICATIONS, PRINTS, APPARATUS, OR PARTS THEREOF, EXCEPT AS EXPRESSLY PERMITTED BY WRITTEN CONSENT OF, OR IN A WRITTEN AGREEMENT WITH, AMS. SUBMITTAL OR DISTRIBUTION TO MEET OFFICIAL REGULATORY REQUIREMENTS WILL NOT BE CONSTRUED AS PUBLICATION IN DEROGATION OF AMS'S COPYRIGHT OR OTHER INTELLECTUAL-PROPERTY OR PROPRIETARY RIGHTS.

PRE-CHECKED SET NAME

30' x 32' THRU 60' x 32'

2GO®

SITE SPECIFIC PROJECT NAME

APPROVED
DIV. OF THE STATE ARCHITECT
APP: 04-122041 PC
REVIEWED FOR
SS ☑ FLS ☑ ACS ☑ CG ☑
DATE: 04/05/2024

☐ 2022 CBC PRE-CHECK (PC) DOCUMENT
A SEPARATE PROJECT APPLICATION FOR CONSTRUCTION IS REQUIRED

MANUFACTURER PROFESSIONAL OF RECORD ON PC

LICENSED ARCHITECT
ANTHONY PATRICK CARNAHAN
No. C12631
Ren. 3-31-25
STATE OF CALIFORNIA

THESE DRAWINGS ARE PRELIMINARY AND NOT FOR CONSTRUCTION UNLESS STAMPED & SIGNED BY THE DESIGN PROFESSIONAL OF RECORD.

REVISIONS

1
2
3
4

DRAWN BY:	A.A.
SCALE:	AS NOTED
DATE:	DD/MM/YY
PROJECT NO:	XXXX-XX

SHEET TITLE: WALL FRAMING DETAILS - WOOD STUDS

SHEET NUMBER:

S8.1

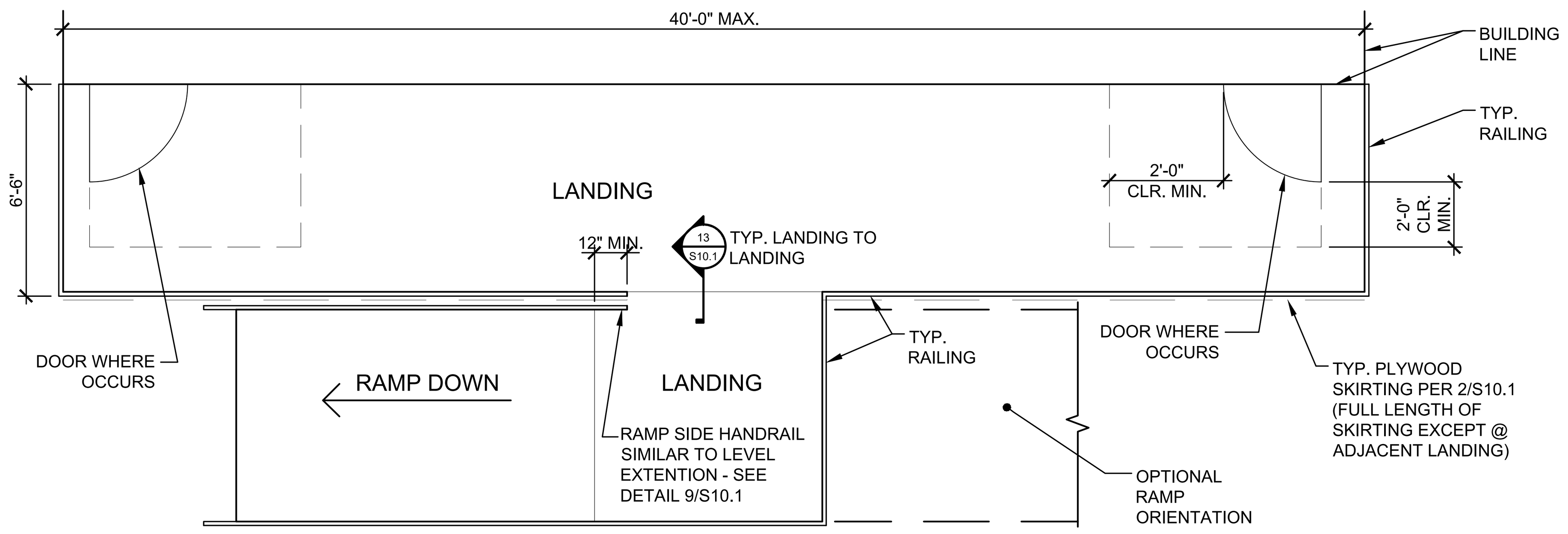

TYPICAL ARCHITECTURAL PLAN

SCALE: 1/4"=1'-0"

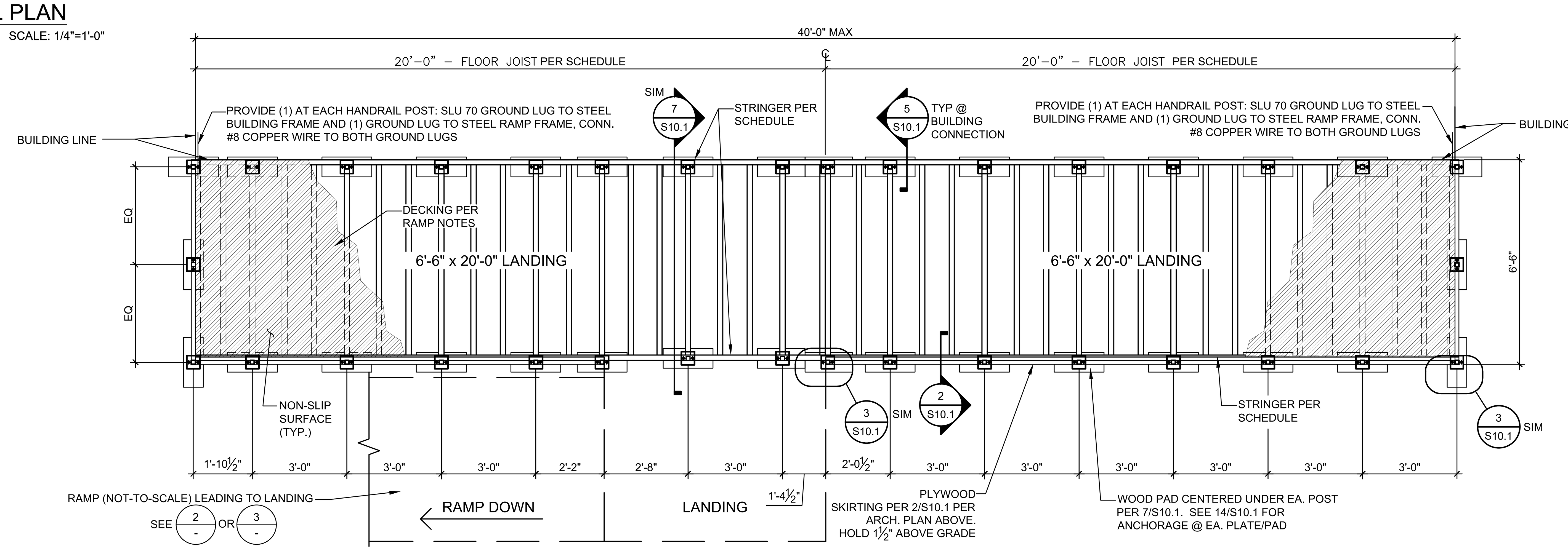

RAMP AND LANDING DATA

OCCUPANCY	TO MATCH BUILDING
SNOW AND ICE LOAD	NOT CONSIDERED
RAMP LIVE LOAD (MAX. PSF)	100 (1,000# CONCENTRATED LD)
DESIGN DEAD LOADS (MAX PSF)	12.0
ALLOWABLE SOIL PRESSURE (PSF)	1,000 FOR WOOD FOUNDATION
LATERAL LOADS	TO MATCH MAX BUILDING REQUIREMENTS
LANDING - PERPENDICULAR TO RAMP DIRECTION & RAMP	OTHER SELF-SUPPORTING STRUCTURE (SEE FRAMES - 7/S10.1) R=1.25 I = 1.0 Ωo = 2.0
LANDING - PARALLEL TO RAMP DIRECTION	PLYWOOD SKIRTING (SHEARWALL)* (SEE DETAIL 2/S10.1)

* NOTE:
LANDING SECTIONS BUILT-UP AGAINST THE BUILDING ARE NOT REQUIRED TO HAVE SKIRTING PER DETAIL 2/S10.1.
THE LANDING IS DESIGNED AS AN OPEN FRONT DIAPHRAGM TO BE LATERALLY CANTILEVERED OFF THE FRONT SKIRTING AND THE FRAMES DETAILED ON 7/S10.1.

LANDING PLAN OPTION

SCALE: 3/8" = 1'-0" 1

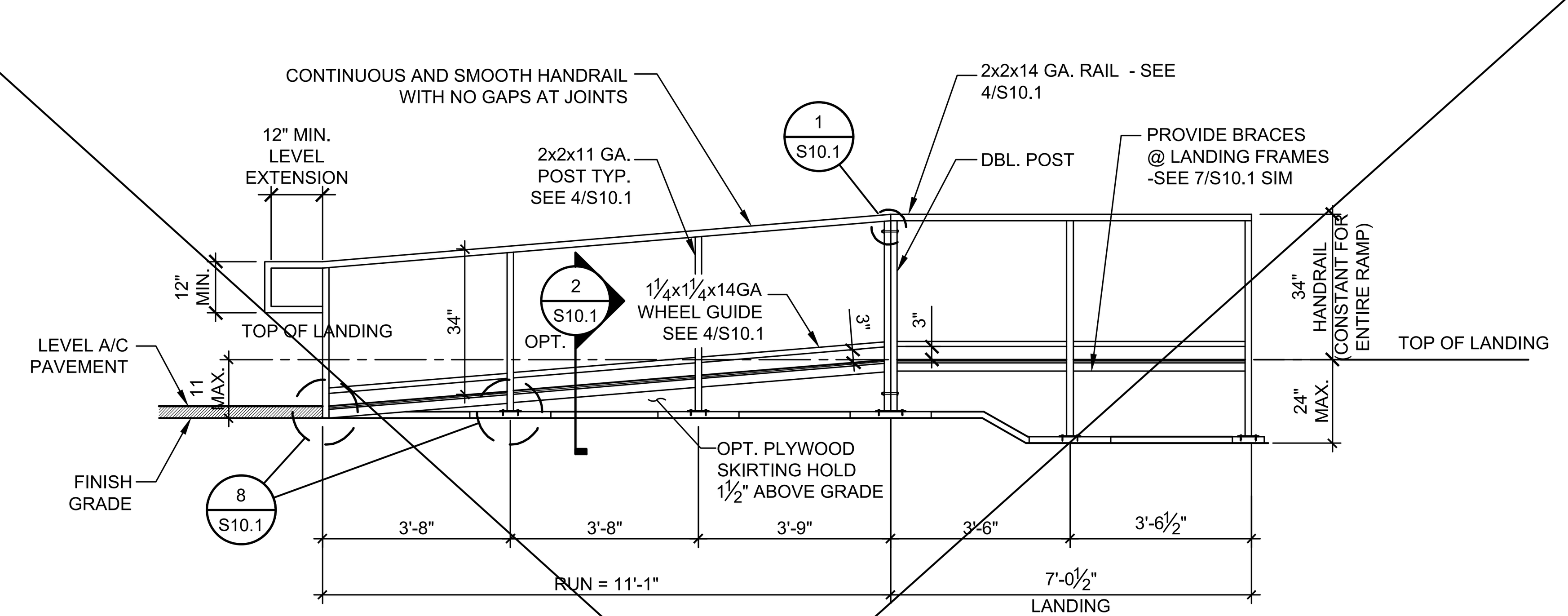

NOTE: RAMP & LANDING TO BE FABRICATED IN SECTIONS (2 MIN.) FOR MOVING

RAMP ELEVATION

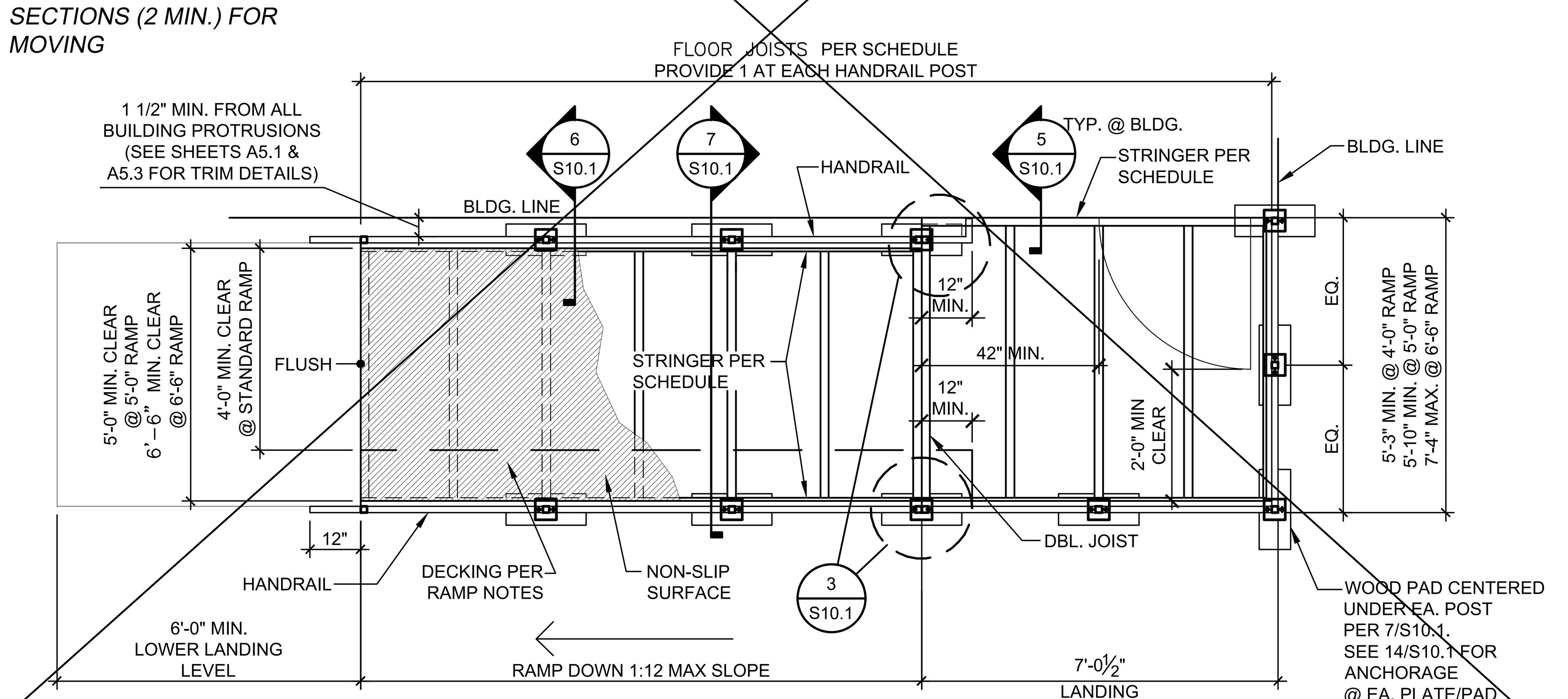

NOTE: FOR RAMP & LANDING MINIMUM REQUIREMENTS, SEE DETAIL 16/A1.0

11-FOOT TYPICAL RAMP

SCALE: 3/8" = 1'-0" 2

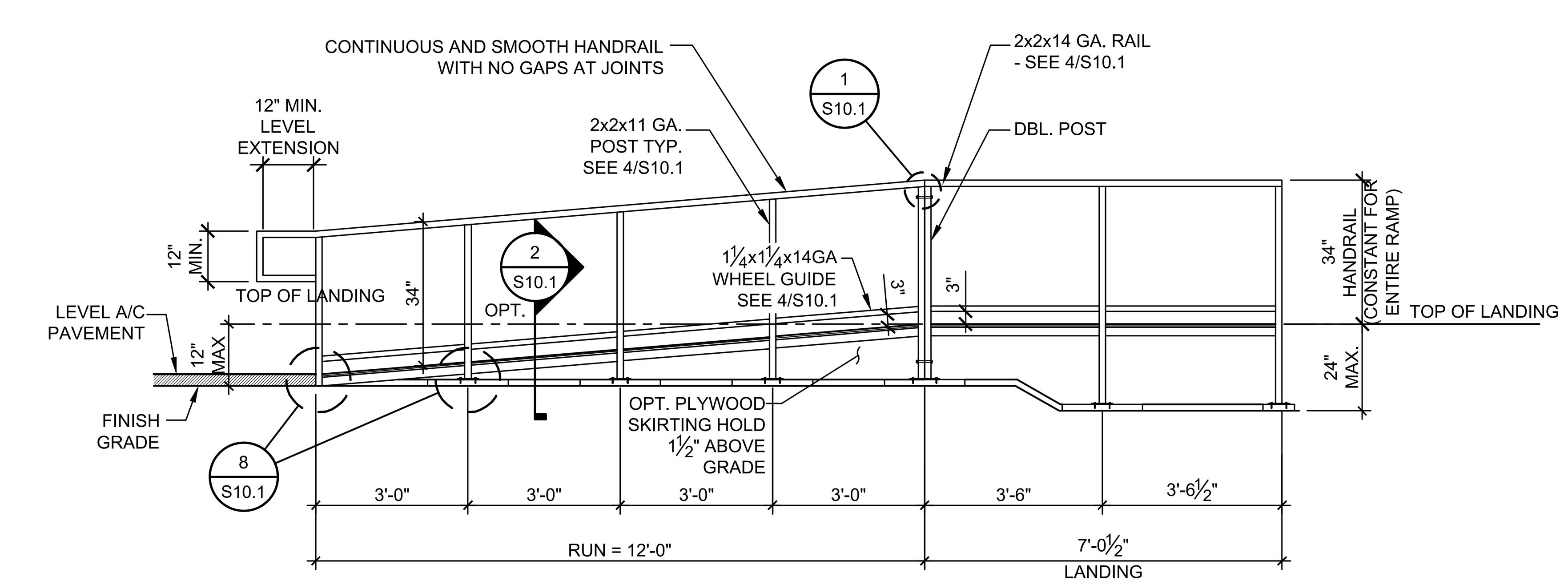

NOTE: RAMP & LANDING TO BE FABRICATED IN SECTIONS (2 MIN.) FOR MOVING

RAMP ELEVATION

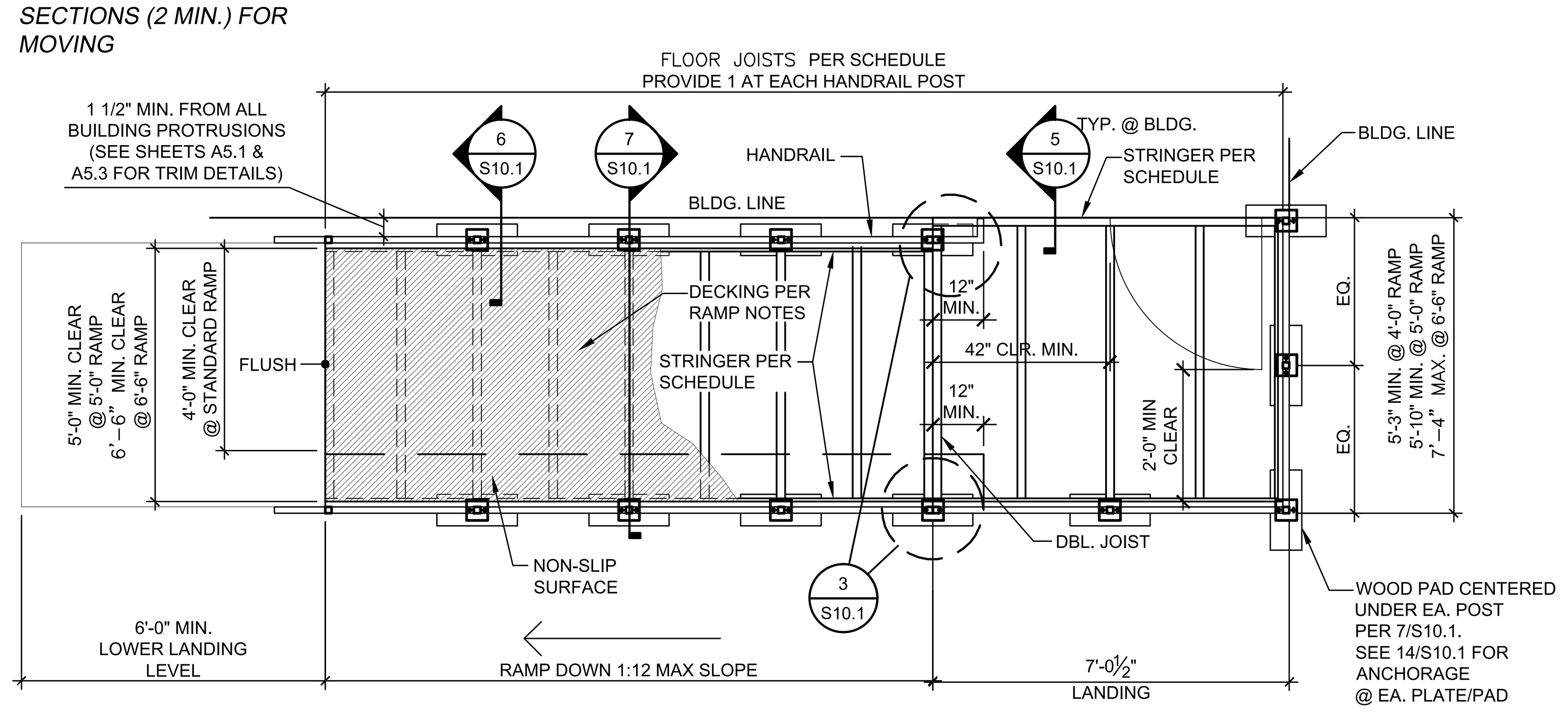

NOTE: FOR RAMP & LANDING MINIMUM REQUIREMENTS, SEE DETAIL 16/A1.0

12-FOOT TYPICAL RAMP

SCALE: 3/8" = 1'-0" 3

1. ENTRY RAMP AND LANDING SPECIFICATIONS

EACH BUILDING SHALL HAVE A RAMP AND LANDING TO CONFORM TO TITLE 24 C.C.R. SECTIONS 11B-405, 1010 AND 1012. THE RAMP AND LANDING STRUCTURES INCLUDING HANDRAILS AND WHEEL GUIDE RAILS ARE TO BE PREFABRICATED METAL IN SECTIONS THAT ARE DEMOUNTABLE FOR MOVING AND REINSTALLATION AT A NEW SITE. HANDRAILS AND WHEEL GUIDE RAILS SHALL BE CONTINUOUS AND SMOOTH WITH NO GAPS AT JOINTS. DESIGN SHALL BE SUCH THAT HEIGHT ADJUSTMENT CAN BE MADE AT THE INSTALLATION SITE. THE RAMP AND LANDING SURFACE SHALL BE ¾" MARINE GRADE PLYWOOD OR 11GA SHEET METAL. RAMP AND LANDING SHALL HAVE A NON-SLIP SURFACE FINISH APPLIED. NON-SLIP FINISH SHALL BE AMCOE GRIP II MANUFACTURED BY AMERICAN ABRASIVE METALS OR COMPARABLE. ALL RAMP SURFACES SHALL BE PAINTED AS INDICATED IN SECTION 9B ON SHEET N1.0. RAMPS SHALL HAVE HANDRAILS ON BOTH SIDES. WALL MOUNTED HANDRAILS SHALL BE OF SIMILAR CONSTRUCTION TO THE INTEGRAL RAMP HANDRAIL AND MOUNTED AT THE SAME HEIGHT. RAMP AND LANDING SHALL BE FULLY SKIRTED WITH THE SAME MATERIAL USED FOR BUILDING SKIRT. SIDES OF RAMP AND LANDING THAT DO NOT ADJOIN BUILDING WALL SHALL BE SKIRTED. ALL EDGES OF THE PLYWOOD SKIRT SHALL BE SUPPORTED AND PROTECTED FROM WEATHER. FOUNDATION MEMBERS SHALL BE AS FOR BUILDING FOUNDATION. ONLY THE FOUNDATION PAD RESTING ON GRADE MAY EXTEND BEYOND THE OUTSIDE FACE OF THE SKIRT 1" MAXIMUM.

2. FLOOR DECKING

¾" MARINE EXTERIOR A.P.A. 48/24 PLYWOOD w/ NON-SLIP SURFACE. DECK SURFACES SHALL BE SEALED ON ALL SIDES. FASTENED TO STEEL FRAMING WITH #10 SELF DRILLING BUGLE HEAD 1" GALV. SCREWS OR 0.144"Øx1½" MIN. GALV ET&F PINS (IAPMO REPORT ER-335) OR EQUIV. @ 6" O.C. EDGES AND 12" O.C. FIELD, TYP.
PROVIDE ATTACHMENT @ 6" O.C. TO JOISTS BETWEEN HANDRAIL POST AS SHOWN ON DETAIL 7/S10.1.

3. ALT. FLOOR DECKING

10 GA. SHEET METAL WITH NON-SLIP SURFACE (0.8 MIN COEFFICIENT OF FRICTION) ATTACHED TO STEEL FRAMING WITH #12x1" STS @ 6" O.C. E.N. & 12" O.C. F.N.
PROVIDE ATTACHMENT @ 6" O.C. TO JOISTS BETWEEN HANDRAIL POST AS SHOWN ON DETAIL 7/S10.1. MATERIAL STRENGTH SHALL BE 36 KSI MIN. w/ A MODULUS OF ELASTICITY OF 29,500 KSI ± 3%. ACCEPTABLE STEEL MATERIALS INCLUDE, BUT ARE NOT LIMITED TO, THE FOLLOWING: ASTM A1011 SS GRADE 36 (Fy=36 KSI) ASTM A653 SS GRADE 37 (Fy=37 KSI) ASTM A1008 SS GRADE 40 (Fy=40 KSI).

4. GROUNDING OF BUILDING COMPONENT

CONTRACTOR SHALL BE RESPONSIBLE FOR PROVIDING NECESSARY CONNECTORS TO GROUND THE METAL PORTIONS OF THE BUILDING (I.E. FRAME, RAMP, ETC.) GROUNDING ROD, WIRES AND TESTING SHALL BE PROVIDED BY OTHER AND MEET THE REQUIREMENTS OF I.R. E-1 ISSUED BY D.S.A.

5. RAMP SLOPE

RAMPS SHALL NOT SLOPE MORE THAN 1" RISE OVER A 12" RUN (1:12). CROSS SLOPE SHALL NOT EXCEED 1:48.

6. HANDRAILS

HANDRAILS SHALL BE INSTALLED ON BOTH SIDES OF RAMP AT 34" HIGH. HANDRAILS SHALL BE AT A CONSISTENT VERTICAL HEIGHT FOR THE ENTIRE STRUCTURE.

7. RAMP PLANNING

DUE TO VARYING SITE CONDITIONS, THE MAXIMUM HEIGHT OF FINISH FLOOR FROM GRADE IS 24", THEREFORE IT IS POSSIBLE THAT THE ACCESS RAMP ATTACHED TO THE BUILDING COULD BE 24'-0" LONG AT A SLOPE OF 1:12. ARCHITECT MUST TAKE INTO ACCOUNT THAT THE RAMP SUPPLIED BY AMS, INC. IS 12'-0" LONG AT A SLOPE OF 1:12, THEREFORE THE ARCHITECT WILL HAVE TO DESIGN AND PROVIDE SUFFICIENT DETAILS OF RAMP EXTENSIONS AND BOTTOM LANDING DEPENDING ON PARTICULAR SITE CONDITIONS. IN NO WAY IS AMS, INC. RESPONSIBLE FOR ANY RAMP EXTENSION EXCEEDING THE ORIGINAL PLAN AS SHOWN ON THIS SHEET.

8. LANDINGS

OVERALL LENGTH OF A LANDING MAY VARY FROM 60" UP TO 40'-0". LENGTH MUST CONFORM TO APPROVED LANDING. SLOPE LANDING NOT TO EXCEED 1:48 TO PREVENT WATER PONDING.

9. FASTENERS

ALL EXTERIOR USE FASTENERS SHALL BE GALVANIZED OR STAINLESS STEEL.

10. WELDING

THE DESIGN PROFESSIONAL HAS EXEMPTED THIS RAMP FROM SPECIAL INSPECTION REQUIREMENTS FOR MATERIAL IDENTIFICATION AND STRUCTURAL WELDING. RAMP SHALL NOT BE MODIFIED NOR HAVE SHIMS ADDED CAUSING THE DISTANCE BETWEEN THE HIGHEST RAMP WALKING SURFACE AND THE ADJACENT GRADE TO BE MORE THAN 30 INCHES. IF THIS CONDITION IS NOT MET, STRUCTURAL TESTING AND/OR INSPECTION WILL BE REQUIRED TO VERIFY MATERIALS AND STRUCTURAL WELDING. THIS APPLIES TO SCOPES OF WORK INCLUDING NEW CONSTRUCTION, ALTERATION, OR RELOCATION OF THE RAMP.

RAMP NOTES

STRINGER SCHEDULE(1)

RAMP/LANDING WIDTH	MAX STRINGER SPANS (FT)		
	3'-0"	3'-6"	3'-9"
4'-0"	2x2x11 GA	2x2x11 GA	HSS 2x2x3/16
5'-0"	2x2x11 GA	2x2x11 GA	HSS 2x2x3/16
5'-10"	2x2x11 GA	2x2x11 GA	HSS 2x2x3/16
6'-6"	2x2x11 GA	2x2x11 GA	HSS 2x2x3/16
7'-4"	2x2x11 GA	2x2x11 GA	HSS 2x2x3/16

(1) SEE 4/S10.1 FOR LIGHT GAUGE STEEL TUBE PROPERTIES, SIZES INDICATED ARE MINIMUM. THICKER TUBES MAY BE USED. HSS 2x2x1/8 OR LARGER PER 11/S10.1 MAY BE SUBSTITUTED FOR LIGHT GAUGE TUBES.

JOIST SCHEDULE(1)

RAMP/ LANDING WIDTH	MAX JOIST SPACING									
	2x2x14 GA.		2x2x11 GA.		HSS 2x2x1/8		HSS 2x2x3/16		HSS 2x2x1/4	
	DECKING		DECKING		DECKING		DECKING		DECKING	
	PLY	10 GA.	PLY	10 GA.	PLY	10 GA.	PLY	10 GA.	PLY	10 GA.
4'-0"	16"	11"	16"	14"	16"	14"	16"	14"	16"	14"
5'-0"	14"	11"	16"	14"	16"	14"	16"	14"	16"	14"
5'-5½"	-	-	12"	12"	12"	12"	16"	14"	16"	14"
5'-10"	-	-	12"	12"	12"	12"	15"	14"	16"	14"
6'-6"	-	-	-	-	-	-	12"	12"	14"	14"
7'-4"	-	-	-	-	-	-	9"	9"	11"	11"

(1) SEE 4/S10.1 FOR LIGHT GAUGE STEEL TUBE PROPERTIES, AND 11/S10.1 FOR HSS PROPERTIES

RAMP/ LANDING MEMBER SCHEDULE

IDENTIFICATION STAMP
DIV. OF THE STATE ARCHITECT
APP: 02-122533 INC:
REVIEWED FOR
SS ☑ FLS ☑ ACS ☑
DATE: 05/22/2024

American Modular Systems
787 Spreckels Ave., Manteca, CA 95336
Phone (209) 825-1921 Fax (209) 825-7018
www.americanmodular.com

INTELLECTUAL-PROPERTY & PROPRIETARY RIGHTS STATEMENT
COPYRIGHT © AMERICAN MODULAR SYSTEMS (AMS)
AMS OWNS ALL COPYRIGHT AND OTHER INTELLECTUAL-PROPERTY AND PROPRIETARY RIGHTS IN THESE DRAWINGS, SPECIFICATIONS, AND THE MATERIAL CONTAINED HEREIN. CERTAIN ELEMENTS SHOWN IN THESE DOCUMENTS ARE REGISTERED TRADEMARKS OF AMS. ALL PATENTABLE MATERIALS CONTAINED IN THESE DOCUMENTS AND ORIGINATING WITH AMS WILL REMAIN THE SOLE PROPERTY OF AMS. THESE DRAWING, SPECIFICATIONS, AND THE MATERIAL CONTAINED HEREIN MAY NOT BE REPRODUCED, TRANSMITTED, COPIED, DISTRIBUTED, MODIFIED, OR OTHERWISE DISPOSED OF (DIRECTLY OR INDIRECTLY) AND MAY NOT BE USED (IN WHOLE OR IN PART) TO ASSIST IN THE CONSTRUCTION, DESIGN, OR OTHER MAKING OF, OR FOR THE PURPOSE OF FURNISHING ANY INFORMATION FOR THE CONSTRUCTION, DESIGN, OR OTHER MAKING OF, ANY BUILDINGS (MODULAR OR OTHERWISE), DRAWINGS, SPECIFICATIONS, PRINTS, APPARATUS, OR PARTS THEREOF, EXCEPT AS EXPRESSLY PERMITTED BY WRITTEN CONSENT OF, OR IN A WRITTEN AGREEMENT WITH, AMS. SUBMITTAL OR DISTRIBUTION TO MEET OFFICIAL REGULATORY REQUIREMENTS WILL NOT BE CONSTRUED AS PUBLICATION IN DEROGATION OF AMS'S COPYRIGHT OR OTHER INTELLECTUAL-PROPERTY OR PROPRIETARY RIGHTS.

PRE-CHECKED SET NAME

30' x 32' THRU 60' x 32'

SITE SPECIFIC PROJECT NAME

.
.
.

APPROVED
DIV. OF THE STATE ARCHITECT
APP: 04-122041 PC
REVIEWED FOR
SS ☑ FLS ☑ ACS ☑ CG ☑
DATE: 04/05/2024

☐ **2022 CBC PRE-CHECK (PC) DOCUMENT**
A SEPARATE PROJECT APPLICATION FOR CONSTRUCTION IS REQUIRED.

MANUFACTURER PROFESSIONAL OF RECORD ON PC

THESE DRAWINGS ARE PRELIMINARY AND NOT FOR CONSTRUCTION UNLESS STAMPED & SIGNED BY THE DESIGN PROFESSIONAL OF RECORD.

REVISIONS

△1
△2
△3
△4

DRAWN BY:	A.A.
SCALE:	AS NOTED
DATE:	DD/MM/YY
PROJECT NO:	XXXX-XX

SHEET TITLE:

TYPICAL RAMP PLANS & NOTES

SHEET NUMBER:

S10.0

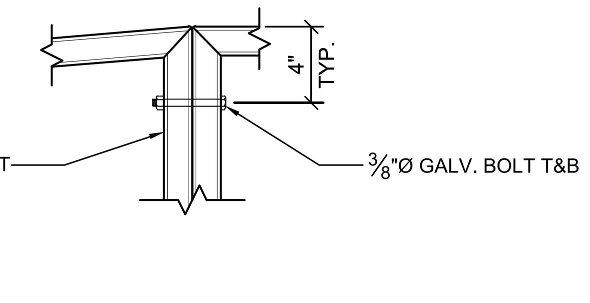

DETAIL
SCALE: 3/8"=1'-0" 1

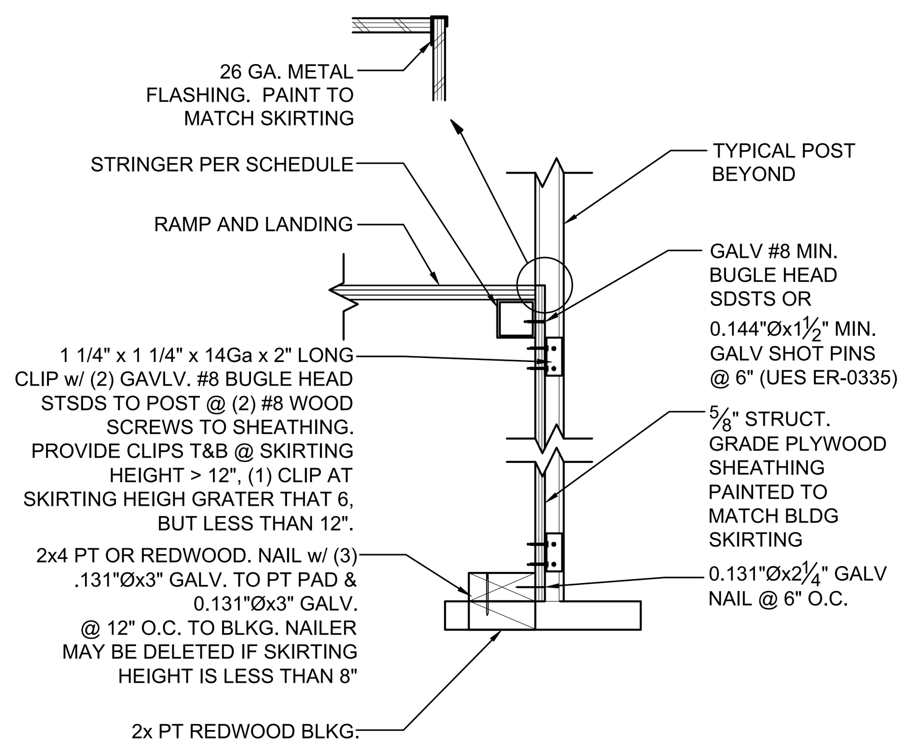

RAMP SKIRT DETAIL
SCALE: 3/8"=1'-0" 2

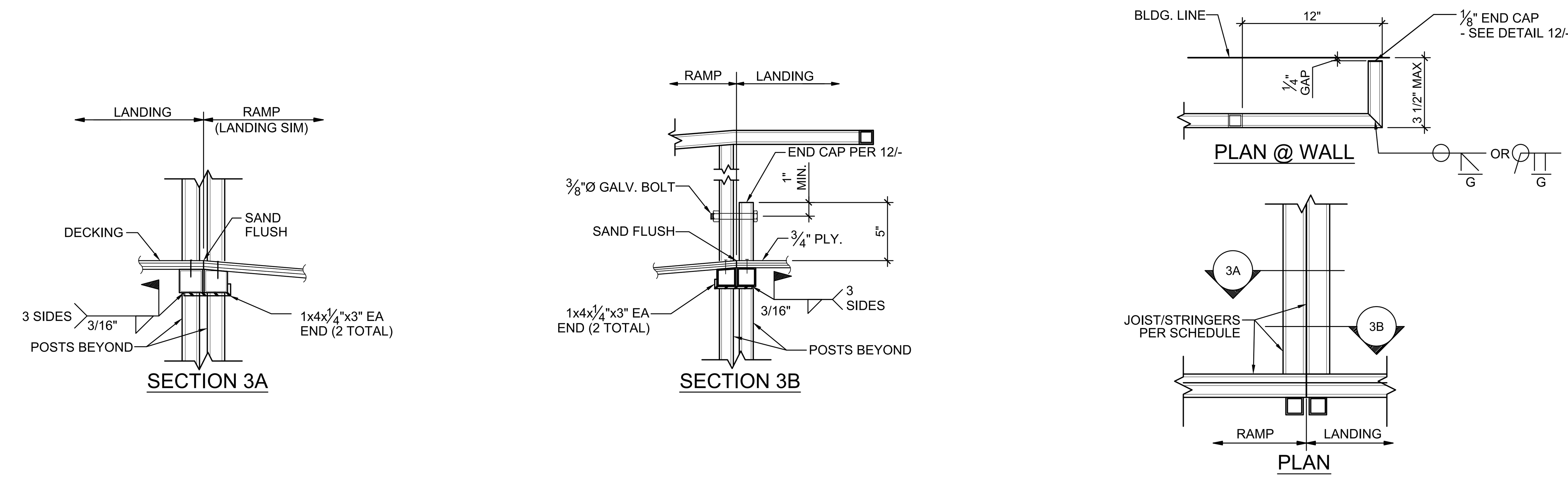

RAMP TO LANDING CONNECTION DETAIL
SCALE: 3/8"=1'-0" 3

1½"x1½"x11 GA. TUBE
A = 0.602 IN²
Sx = 0.244 IN³
Ix = 0.183 IN⁴
t = 0.112" MIN.
(0.1175" DESIGN)

1¾"x1¾"x11 GA. TUBE
A = 0.725 IN²
Sx = 0.356 IN³
Ix = 0.312 IN⁴
t = 0.112" MIN.
(0.1175" DESIGN)

1¼"x1¼"x14 GA. TUBE
A = 0.319 IN²
Sx = 0.114 IN³
Ix = 0.072 IN⁴
t = 0.068" MIN.
(0.0713" DESIGN)

1¼"x1¼"x11 GA. TUBE
A = 0.497 IN²
Sx = 0.163 IN³
Ix = 0.102 IN⁴
t = 0.112" MIN.
(0.1175" DESIGN)

2"x2"x11 GA TUBE
A = 0.837 IN²
Sx = .479 IN³
Ix = .479 IN⁴
t = 0.112" MIN.
(0.1175" DESIGN)

2"x1"x10 GA TUBE
A = 0.533 IN²
Sx = 0.324 IN³
Ix = 0.324 IN⁴
t = 0.068" MIN.
(0.0713" DESIGN)

MATERIAL STRENGTH SHALL BE 36 KSI MIN. w/ A MODULUS OF ELASTICITY OF 29,500 KSI ± 3%. ACCEPTABLE STEEL MATERIALS INCLUDE, BUT ARE NOT LIMITED TO, THE FOLLOWING:

ASTM A1011 SS GRADE 36 (Fy=36 KSI)
ASTM A653 SS GRADE 37 (Fy=37 KSI)
ASTM A1008 SS GRADE 40 (Fy=40 KSI)

MATERIAL SHALL BE GIVEN A RUST INHIBITIVE COATING.

THE MATERIAL THICKNESS OF LIGHT GAUGE STEEL MEMBERS, IN THEIR END US, SHALL MEET OR EXCEED THE MINIMUM BASE METAL THICKNESS SPECIFIED ABOVE. THE MATERIAL GAUGE DESIGNATION SHALL BE USED AS REFERENCE ONLY. SPECIFIED STEEL TUBE THICKNESSES ARE MINIMUM. THICKER TUBES MAY BE USED.

LIGHT GAUGE STEEL TUBE PROPERTIES
SCALE: 3/8"=1'-0" 4

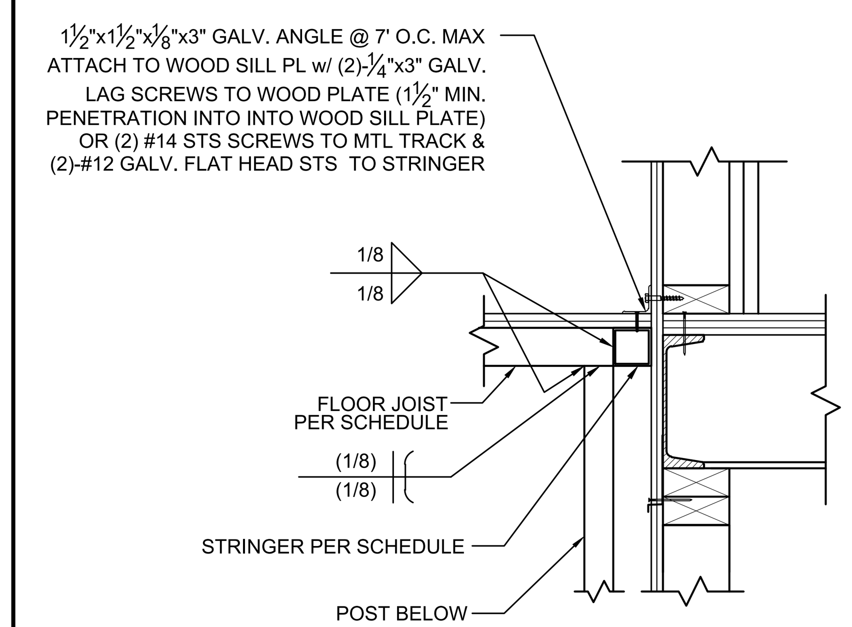

LANDING ATTACHMENT DETAIL
SCALE: 3/8"=1'-0" 5

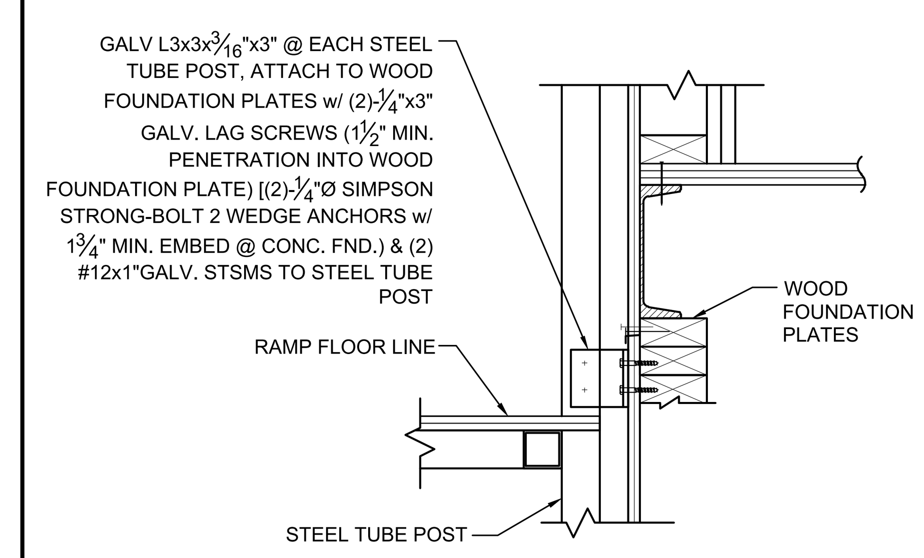

RAMP CONNECTION DETAIL
SCALE: 3/8"=1'-0" 6

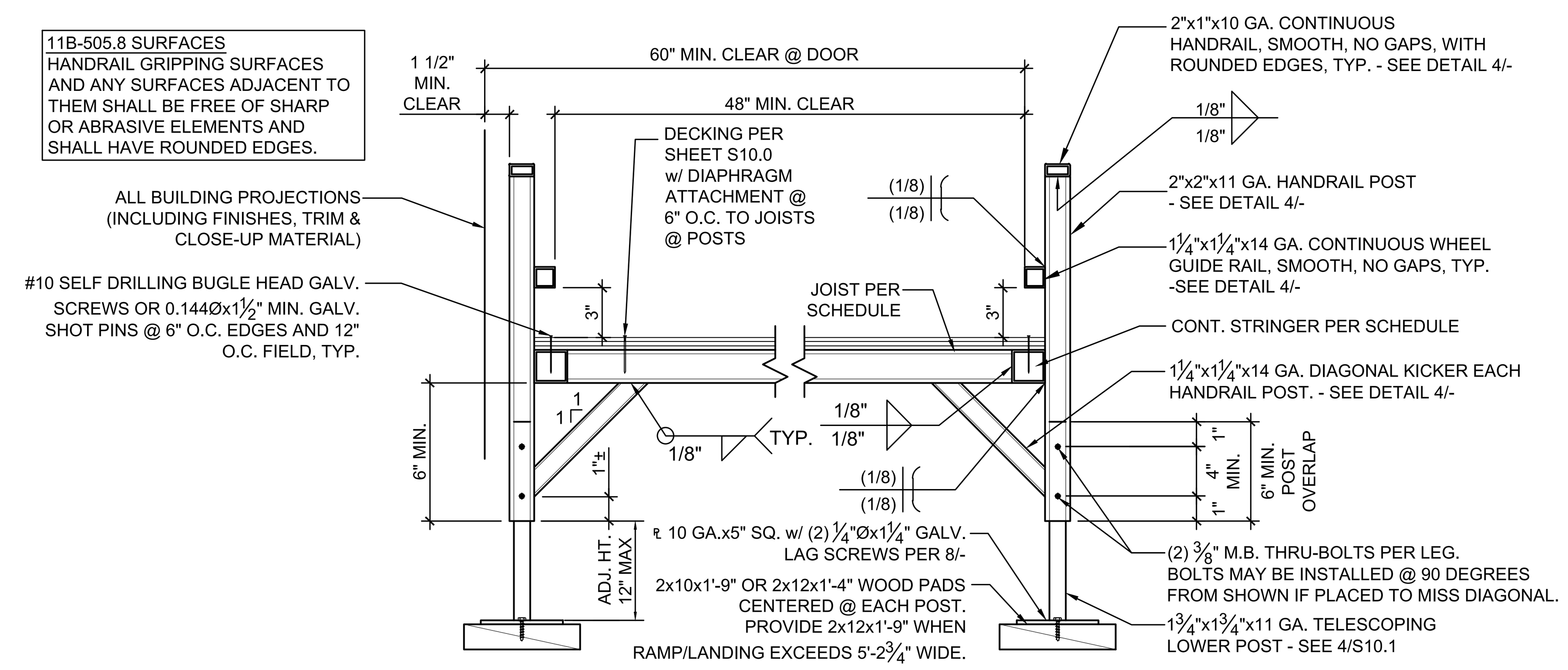

HANDRAIL & RAMP SECTION
SCALE: 3/8"=1'-0" 7

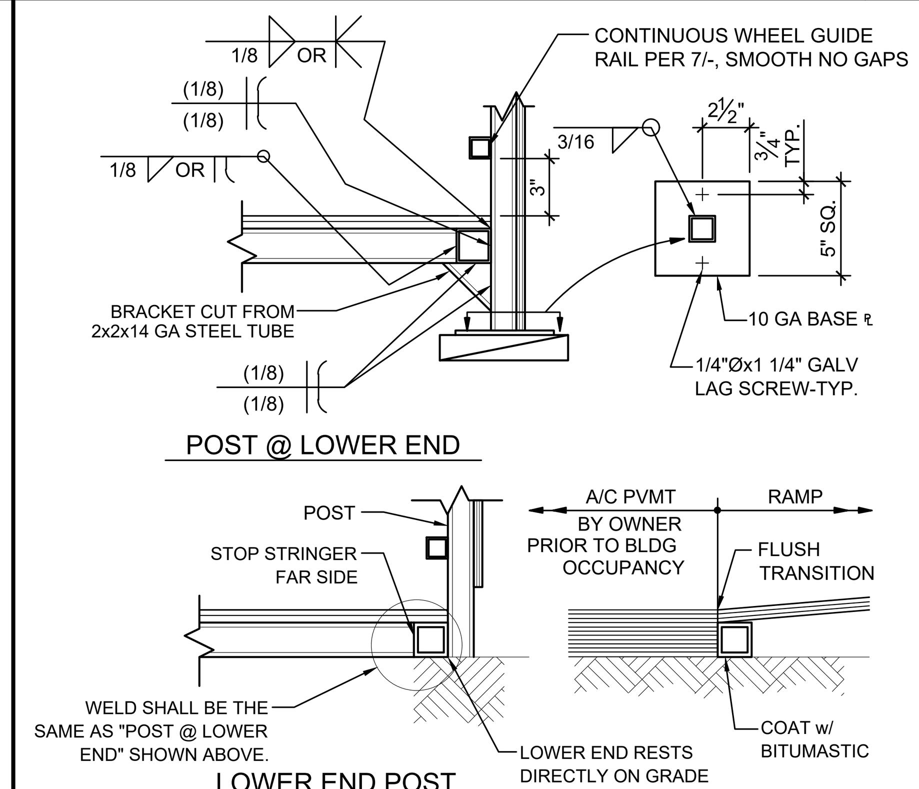

DETAIL
8

NOTE:
THE ZERO CLEARANCE RAMP LAYOUT IS AN OPTIONAL METHOD ONLY. IT MUST BE APPROVED IN WRITING, IF AMS IS TO PROVIDE THIS OPTION. ARCHITECT/OWNER MUST TAKE INTO ACCOUNT VARYING SITE CONDITIONS, GRADE CHANGES, BUILDING SEPARATION, ETC.

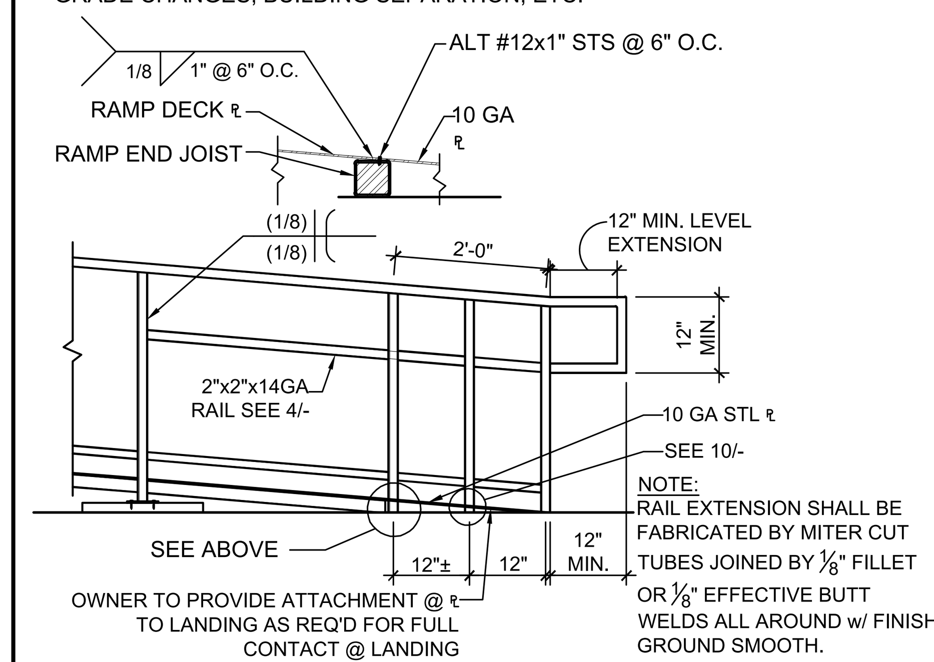

NOTE:
RAIL EXTENSION SHALL BE FABRICATED BY MITER CUT TUBES JOINED BY ⅛" FILLET OR ⅛" EFFECTIVE BUTT WELDS ALL AROUND w/ FINISH GROUND SMOOTH.

TYP. ZERO CLEARANCE RAMP DETAIL
SCALE: 3/8"=1'-0" 9

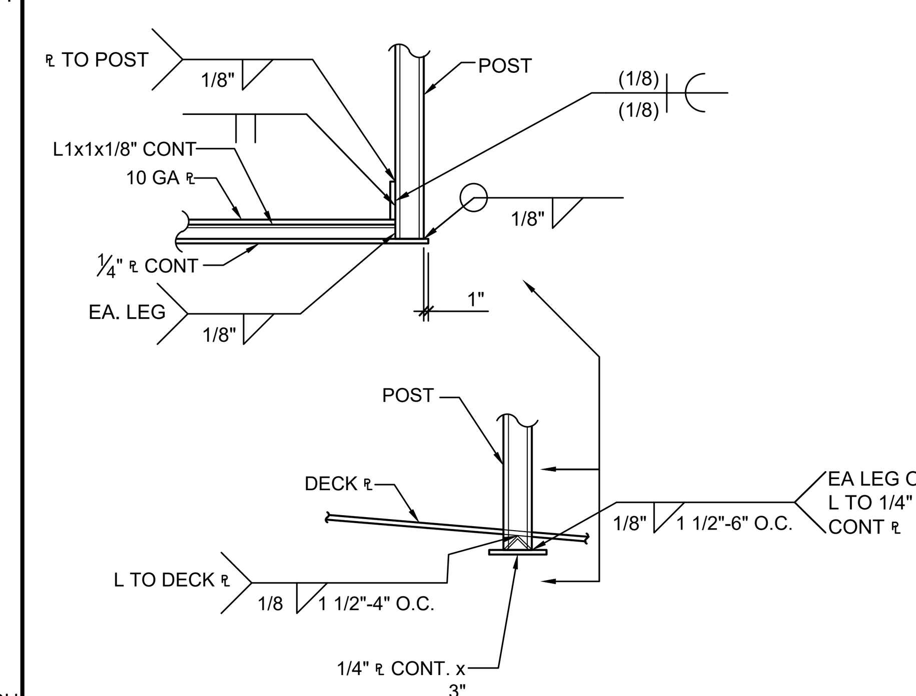

DETAIL
SCALE: 3/8"=1'-0" 10

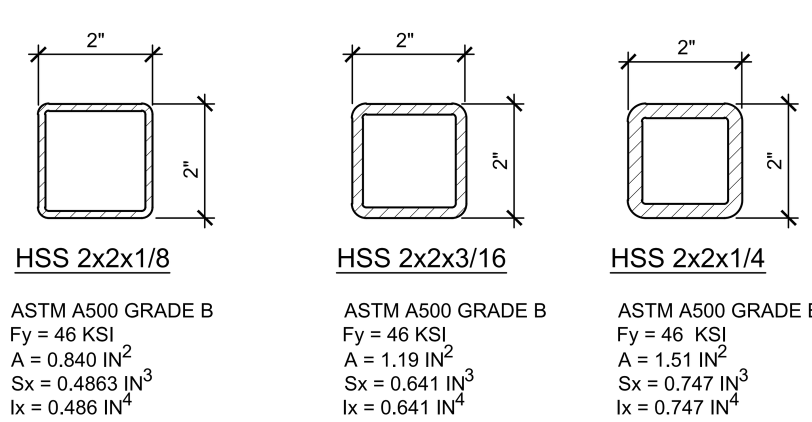

HSS 2x2x1/8
ASTM A500 GRADE B
Fy = 46 KSI
A = 0.840 IN²
Sx = 0.4863 IN³
Ix = 0.486 IN⁴

HSS 2x2x3/16
ASTM A500 GRADE B
Fy = 46 KSI
A = 1.19 IN²
Sx = 0.641 IN³
Ix = 0.641 IN⁴

HSS 2x2x1/4
ASTM A500 GRADE B
Fy = 46 KSI
A = 1.51 IN²
Sx = 0.747 IN³
Ix = 0.747 IN⁴

MATERIAL SHALL BE GIVEN A RUST INHIBITIVE COATING

HSS PROPERTIES
11

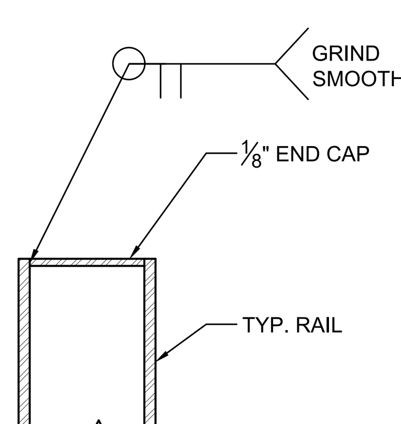

NOTE: END CAP MAY ALSO BE PLASTIC SNAP-ON CAP

END CAP DETAIL
SCALE: N.T.S. 12

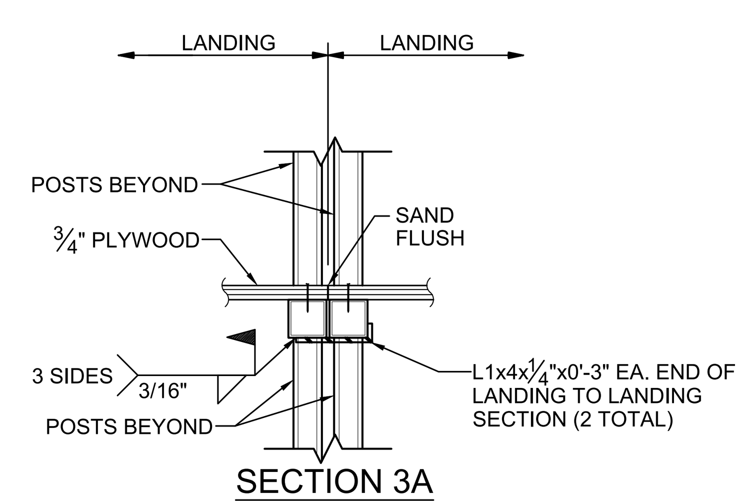

LANDING TO LANDING CONNECTION
SCALE: 3/8" = 1'-0" 13

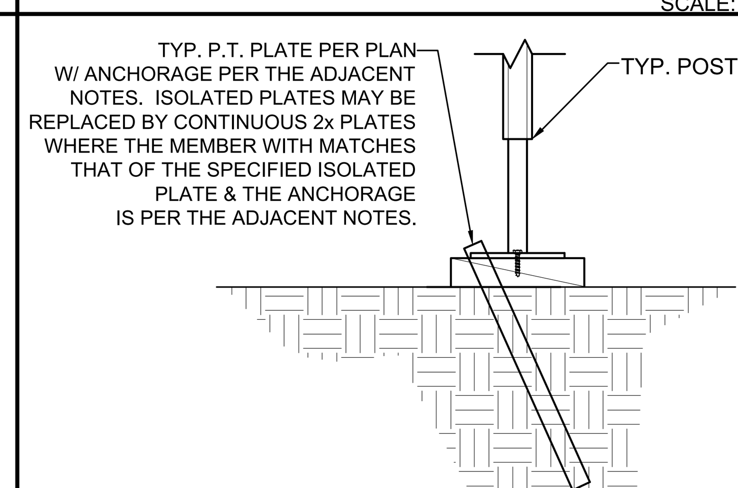

P.T. PLATE ANCHORAGE (ISOLATED PLATES)
ON SOIL, A/C OR CONCRETE PAVING
1"Ø STANDARD WEIGHT (1.315 ACTUAL O.D.) HOT DIPPED GALV. PIPE PER PLATE w/ 12" MIN. PENETRATION MEASURED VERTICALLY BELOW SOIL OR PAVING SURFACE. DRILL PLATE 1 3/8"Ø MAX. PIPE MAY BE DRIVEN MAX. PIPE MAY BE DRIVEN MAX 45° ANGLE TO VERTICAL.

ALTERNATE ON CONC. PAVING ONLY:
(2) SIMPSON SS (STAINLESS STEEL) STRONG-BOLT 2 THRU EA. PLATE w/ 3½" MIN. CONC. EMBEDMENT. SEE SHTS. S2.0-S2.3 FOR INSTALLATION REQUIREMENTS.

P.T. PLATE ANCHORAGE (CONTINUOUS PLATES)
ON SOIL, A/C OR CONCRETE PAVING
1"Ø STANDARD WEIGHT (1.315 ACTUAL O.C.) HOT DIPPED GALV. PIPE @ 4'-0" O.C. MAX. w/ 12" MIN. PENETRATION MEASURED VERTICALLY BELOW SOIL OR PAVING SURFACE. PROVIDE A MIN. OF (2) PIPE ANCHORS FOR ANY SECTION OF PLATE. DRILL PLATE 1 3/8"Ø MAX. PIPE MAY BE DRIVEN MAX 45° ANGLE TO VERTICAL.

ALTERNATE ON CONC. PAVING ONLY:
SIMPSON SS (STAINLESS STEEL) STRONG-BOLT 2 THRU PLATE @ 3'-0" O.C. MAX. w/ 3½" MIN. CONC. EMBEDMENT. PROVIDE A MIN. OF (2) ANCHORS FOR ANY SECTION OF PLATE. SEE SHTS. S2.0-S2.3 FOR INSTALLATION REQUIREMENTS.

P.T PLATE ANCHORAGE
SCALE: 3/8" = 1'-0" 14

1. STEEL IN CONTACT WITH GROUND OR PT WOOD FOUNDATION PLATE SHOULD BE GALVANIZED.

GENERAL CONNECTION NOTES

IDENTIFICATION STAMP
DIV. OF THE STATE ARCHITECT
APP: 02-122533 INC:
REVIEWED FOR
SS ☑ FLS ☑ ACS ☑
DATE: 05/22/2024

American Modular Systems
787 Spreckels Ave., Manteca, CA 95336
Phone (209) 825-1921 Fax (209) 825-7018
www.americanmodular.com

INTELLECTUAL-PROPERTY & PROPRIETARY RIGHTS STATEMENT
COPYRIGHT © AMERICAN MODULAR SYSTEMS (AMS)
AMS OWNS ALL COPYRIGHT AND OTHER INTELLECTUAL-PROPERTY AND PROPRIETARY RIGHTS IN THESE DRAWINGS, SPECIFICATIONS, AND THE MATERIAL CONTAINED HEREIN. CERTAIN ELEMENTS SHOWN IN THESE DOCUMENTS ARE REGISTERED TRADEMARKS OF AMS. ALL PATENTABLE MATERIALS CONTAINED IN THESE DOCUMENTS AND ORIGINATING WITH AMS WILL REMAIN THE SOLE PROPERTY OF AMS. THESE DRAWING, SPECIFICATIONS, AND THE MATERIAL CONTAINED HEREIN MAY NOT BE REPRODUCED, TRANSMITTED, COPIED, DISTRIBUTED, MODIFIED, OR OTHERWISE DISPOSED OF (DIRECTLY OR INDIRECTLY) AND MAY NOT BE USED (IN WHOLE OR IN PART) TO ASSIST IN THE CONSTRUCTION, DESIGN, OR OTHER MAKING OF, OR FOR THE PURPOSE OF FURNISHING ANY INFORMATION FOR THE CONSTRUCTION, DESIGN, OR OTHER MAKING OF, ANY BUILDINGS (MODULAR OR OTHERWISE), DRAWINGS, SPECIFICATIONS, PRINTS, APPARATUS, OR PARTS THEREOF, EXCEPT AS EXPRESSLY PERMITTED BY WRITTEN CONSENT OF, OR IN A WRITTEN AGREEMENT WITH, AMS. SUBMITTAL OR DISTRIBUTION TO MEET OFFICIAL REGULATORY REQUIREMENTS WILL NOT BE CONSTRUED AS PUBLICATION IN DEROGATION OF AMS'S COPYRIGHT OR OTHER INTELLECTUAL-PROPERTY OR PROPRIETARY RIGHTS.

PRE-CHECKED SET NAME
30' x 32' THRU 60' x 32'
2GO®

SITE SPECIFIC PROJECT NAME
.
.
.

APPROVED
DIV. OF THE STATE ARCHITECT
APP: 04-122041 PC
REVIEWED FOR
SS ☑ FLS ☑ ACS ☑ CG ☑
DATE: 04/05/2024

☐ **2022 CBC PRE-CHECK (PC) DOCUMENT**
A SEPARATE PROJECT APPLICATION FOR CONSTRUCTION IS REQUIRED.

MANUFACTURER PROFESSIONAL OF RECORD ON PC

THESE DRAWINGS ARE PRELIMINARY AND NOT FOR CONSTRUCTION UNLESS STAMPED & SIGNED BY THE DESIGN PROFESSIONAL OF RECORD.

REVISIONS
1
2
3
4

DRAWN BY:	A.A.
SCALE:	AS NOTED
DATE:	DD/MM/YY
PROJECT NO:	XXXX-XX

SHEET TITLE:
RAMP DETAILS

SHEET NUMBER:
S10.1

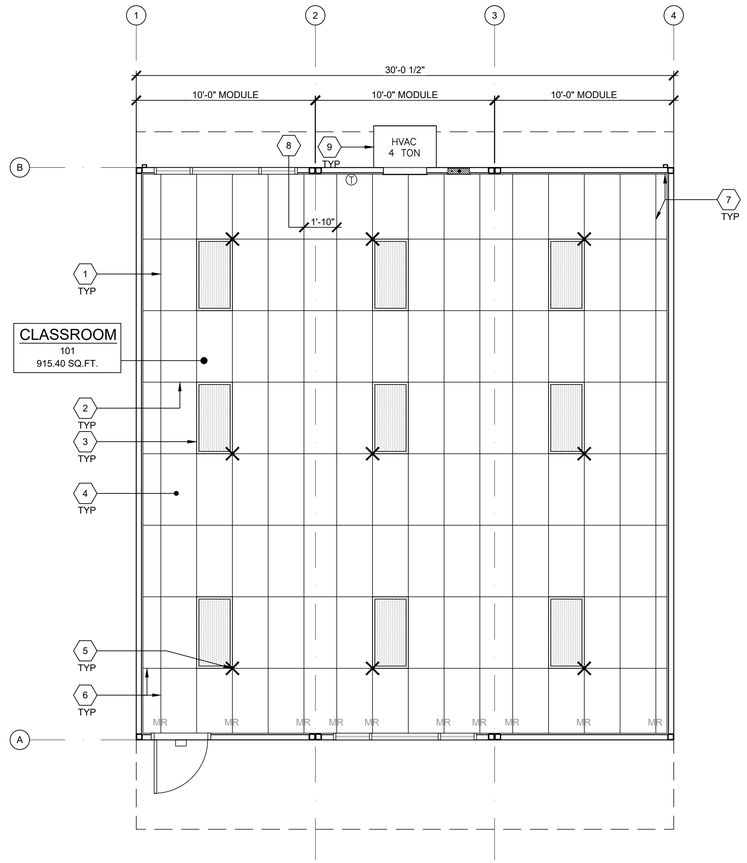

TYPICAL REFLECTED CEILING PLAN

SCALE: 1/4" = 1' - 0"

1

1	MAIN TEE RUNNER TYP. PER TABLE A, SHEET M1.7
2	CROSS TEE RUNNER TYP. PER TABLE A, SHEET M1.7
3	INTERIOR LIGHT FIXTURE, REFER TO SHEET SHEET E1.0 FOR SPEC'S ATTACHMENT PER DETAIL 7/M1.4
4	CEILING HEIGHT @ 8'-6" MIN.
5	STRUT/SPLAY WIRE ASSEMBLY, SEE 2/M1.4 FOR DETAILS
6	FIXED CEILING END, SEE DETAIL 5A/M1.4
7	FREE CEILING END, SEE DETAIL 5B/M1.4
8	CENTER SECTION THAT CROSSES MODULE LINE TO BE FIELD INSTALLED, SEE DETAIL 5C/M1.4
9	TYP. HVAC UNIT
10	NOT USED

KEY NOTES

1. WHERE TWO OR MORE HVAC UNITS SERVE A COMMON SPACE, UNITS SHALL BE EQUIPPED WITH A DUCT SMOKE DETECTOR FOR AUTO SHUTDOWN. INTERCONNECT WITH FIRE ALARM SYSTEM.
2. AUTOMATIC SHUT-OFF IS NOT REQUIRED WHEN ALL OCCUPIED ROOMS SERVED BY THE AIR HANDLING EQUIPMENT HAVE DIRECT ACCESS TO THE EXTERIOR AND THE TRAVEL DISTANCE DOES NOT EXCEED 100 FT. PER C.M.C. 608.1 EXCEPTION #2.
3. LIGHT FIXTURES MAY BE INSTALLED ROTATED 90° FROM SHOWN TO MATCH T-GRID.
4. PC TITLE 24 HAS BEEN RUN FOR WORSE CASE OUTDOOR VENTILATION REQUIREMENTS (SEE OUTDOOR VENTILATION ON SHEET N2.0 FOR OUR OUTDOOR VENTILATION DESIGN REQUIREMENT NOTES)

GENERAL NOTES

MEP COMPONENT ANCHORAGE NOTES

ALL MECHANICAL, PLUMBING, AND ELECTRICAL COMPONENTS SHALL BE ANCHORED AND INSTALLED PER THE DETAILS ON THE DSA APPROVED CONSTRUCTION DOCUMENTS. THE FOLLOWING COMPONENTS SHALL BE ANCHORED OR BRACED TO MEET THE FORCE AND DISPLACEMENT REQUIREMENTS PRESCRIBED IN THE 2022 CBC, SECTIONS 1617A.1.18 THROUGH 1617A.1.26 AND ASCE 7-16 CHAPTER 13, 26 AND 30.

1. ALL PERMANENT EQUIPMENT AND COMPONENTS.
2. TEMPORARY, MOVABLE OR MOBILE EQUIPMENT THAT IS PERMANENTLY ATTACHED (E.G. HARD WIRED) TO THE BUILDING UTILITY SERVICES SUCH AS ELECTRICITY, GAS OR WATER. "PERMANENTLY ATTACHED" SHALL INCLUDE ALL ELECTRICAL CONNECTIONS EXCEPT PLUGS FOR110/220 VOLT RECEPTACLES HAVING A FLEXBLE CABLE.
3. TEMPORARY, MOVABLE OR MOBILE EQUIPMENT WHICH IS HEAVIER THAN 400 POUNDS OR HAS A CENTER OF MASS LOCATED 4 FEET OR MORE ABOVE THE ADJACENT FLOOR OR ROOF LEVEL THAT DIRECTLY SUPPORT THE COMPONENT IS REQUIRED TO BE RESTRAINED IN A MANNER APPROVED BY DSA.

THE FOLLOWING MECHANICAL AND ELECTRICAL COMPONENTS SHALL BE POSITIVELY ATTACHED TO THE STRUCTURE BUT NEED NOT DEMONSTRATE DESIGN COMPLIANCE WITH THE REFERENCE NOTED ABOVE. THESE COMPONENTS SHALL HAVE FLEXIBLE CONNECTIONS PROVIDED BETWEEN THE COMPONENT AND ASSOCIATED DUCTWORK, PIPING, AND CONDUIT. FLEXIBLE CONNECTIONS MUST ALLOW MOVEMENT IN BOTH TRANSVERSE AND LONGITUDINAL DIRECTIONS:

A. COMPONENTS WEIGHING LESS THAN 400 POUNDS AND HAVE A CENTER OF MASS LOCATED 4 FEET OR LESS ABOVE THE ADJACENT FLOOR OR ROOF LEVEL THAT DIRECTLY SUPPORT THE COMPONENT.

B. COMPONENTS WEIGHING LESS THAN 20 POUNDS, OR IN THE CASE OF DISTRIBUTED SYSTEMS, LESS THAN 5 POUNDS PER FOOT, WHICH ARE SUSPENDED FROM A ROOF OR FLOOR OR HUNG FROM A WALL.

THE ANCHORAGE OF ALL MECHANICAL, ELECTRICAL AND PLUMBING COMPONENTS SHALL BE SUBJECT TO THE APPROVAL OF THE DESIGN PROFESSIONAL IN GENERAL RESPONSIBLE CHARGE OR STRUCTURAL ENGINEER DELEGATED RESPONSIBILITY AND ACCEPTANCE BY DSA. THE PROJECT INSPECTOR WILL VERIFY THAT ALL COMPONENTS AND EQUIPMENT HAVE BEEN ANCHORED IN ACCORDANCE WITH THE ABOVE REQUIREMENTS.

PIPING, DUCTWORK, AND ELECTRICAL DISTRIBUTION SYSTEM BRACING NOTES

PIPING, DUCTWORK, AND ELECTRICAL DISTRIBUTION SYSTEMS SHALL BE BRACED TO COMPLY WITH THE FORCES AND DISPLACEMENTS PRESCRIBED IN ASCE 7-16 SECTION 13.3 AS DEFINED IN ASCE 7-16 SECTION 13.6.5, 13.6.6, 13.6.7, 13.6.8; AND 2022 CBC, SECTIONS 1617A.1.24, 1617A.1.25 AND 1617A.1.26.

THE METHOD OF SHOWING BRACING AND ATTACHMENTS TO THE STRUCTURE FOR THE IDENTIFIED DISTRIBUTION SYSTEM ARE AS NOTED BELOW. WHEN BRACING AND ATTACHMENTS ARE BASED ON A PRE-APPROVED INSTALLATION GUIDE (E.G., OSHPD OPM FOR 2013 CBC OR LATER), COPIES OF THE BRACING SYSTEM INSTALLATION GUIDE OR MANUAL SHALL BE AVAILABLE ON THE JOBSITE PRIOR TO THE START OF AND DURING THE HANGING AND BRACING OF THE DISTRIBUTION SYSTEMS. THE STRUCTURAL ENGINEER OF RECORD SHALL VERIFY THE ADEQUACY OF THE STRUCTURE TO SUPPORT THE HANGER AND BRACE LOADS.

MECHANICAL PIPING (MP), MECHANICAL DUCTS (MD), PLUMBING PIPING (PP), ELECTRICAL DISTRIBUTION SYSTEMS (E):

MP ☒ MD ☒ PP ☒ E ☒ OPTION 1: DETAILED ON THE APPROVED DRAWINGS WITH PROJECT SPECIFIC NOTES AND DETAILS.

MP ☐ MD ☐ PP ☐ E ☐ OPTION 2: SHALL COMPLY WITH THE APPLICABLE OSHPD PRE-APPROVAL (OPM #) #_____.

BUILDING SIZE	TOTAL # OF 10'-0" WIDE MODULES	TOTAL # OF CENTER MODULES	TOTAL BLDG WIDTH
☒ 30'x32'	3	1	30'-0"
☐ 40'x32'	4	2	40'-0"
☐ 50'x32'	5	3	50'-0"
☐ 60'x32'	6	4	60'-0"

NOT USED

NOT USED

NOT USED

BUILDING SIZE SCHEDULE

MEP COMPONENT ANCHORAGE NOTES

IDENTIFICATION STAMP
DIV. OF THE STATE ARCHITECT
APP: 02-122533 INC:
REVIEWED FOR
SS ☑ FLS ☑ ACS ☑
DATE: 05/22/2024

American Modular Systems
787 Spreckels Ave., Manteca, CA 95336
Phone (209) 825-1921 Fax (209) 825-7018
www.americanmodular.com

INTELLECTUAL-PROPERTY & PROPRIETARY RIGHTS STATEMENT
COPYRIGHT © AMERICAN MODULAR SYSTEMS (AMS)
AMS OWNS ALL COPYRIGHT AND OTHER INTELLECTUAL-PROPERTY AND PROPRIETARY RIGHTS IN THESE DRAWINGS, SPECIFICATIONS, AND THE MATERIAL CONTAINED HEREIN. CERTAIN ELEMENTS SHOWN IN THESE DOCUMENTS ARE REGISTERED TRADEMARKS OF AMS. ALL PATENTABLE MATERIALS CONTAINED IN THESE DOCUMENTS AND ORIGINATING WITH AMS WILL REMAIN THE SOLE PROPERTY OF AMS. THESE DRAWING, SPECIFICATIONS AND THE MATERIAL CONTAINED HEREIN MAY NOT BE REPRODUCED, TRANSMITTED, COPIED, DISTRIBUTED, MODIFIED, OR OTHERWISE DISPOSED OF (DIRECTLY OR INDIRECTLY) AND MAY NOT BE USED (IN WHOLE OR IN PART) TO ASSIST IN THE CONSTRUCTION, DESIGN, OR OTHER MAKING OF, OR FOR THE PURPOSE OF FURNISHING ANY INFORMATION FOR THE CONSTRUCTION, DESIGN, OR OTHER MAKING OF, ANY BUILDINGS (MODULAR OR OTHERWISE), DRAWINGS, SPECIFICATIONS, PRINTS, APPARATUS, OR PARTS THEREOF, EXCEPT AS EXPRESSLY PERMITTED BY WRITTEN CONSENT OF, OR IN A WRITTEN AGREEMENT WITH, AMS. SUBMITTAL OR DISTRIBUTION TO MEET OFFICIAL REGULATORY REQUIREMENTS WILL NOT BE CONSTRUED AS PUBLICATION IN DEROGATION OF AMS'S COPYRIGHT OR OTHER INTELLECTUAL-PROPERTY OR PROPRIETARY RIGHTS.

PRE-CHECKED SET NAME

30' x 32' THRU 60' x 32'

2GO

SITE SPECIFIC PROJECT NAME

GALT JOINT UESD
VERNON GREER ES
(2) 30'X32' BUILDINGS

MANUFACTURER PROFESSIONAL OF RECORD ON PC

LICENSED ARCHITECT
PATRICK CONNOR
No. C12631
Ren. 3-31-25
STATE OF CALIFORNIA

THESE DRAWINGS ARE PRELIMINARY AND NOT FOR CONSTRUCTION UNLESS STAMPED & SIGNED BY THE DESIGN PROFESSIONAL OF RECORD.

REVISIONS

1
2
3
4

DRAWN BY:	A.V.
SCALE:	AS NOTED
DATE:	01/04/24
PROJECT NO:	1878-24

SHEET TITLE:

TYPICAL REFLECTED CEILING PLAN

SHEET NUMBER:

M1.0

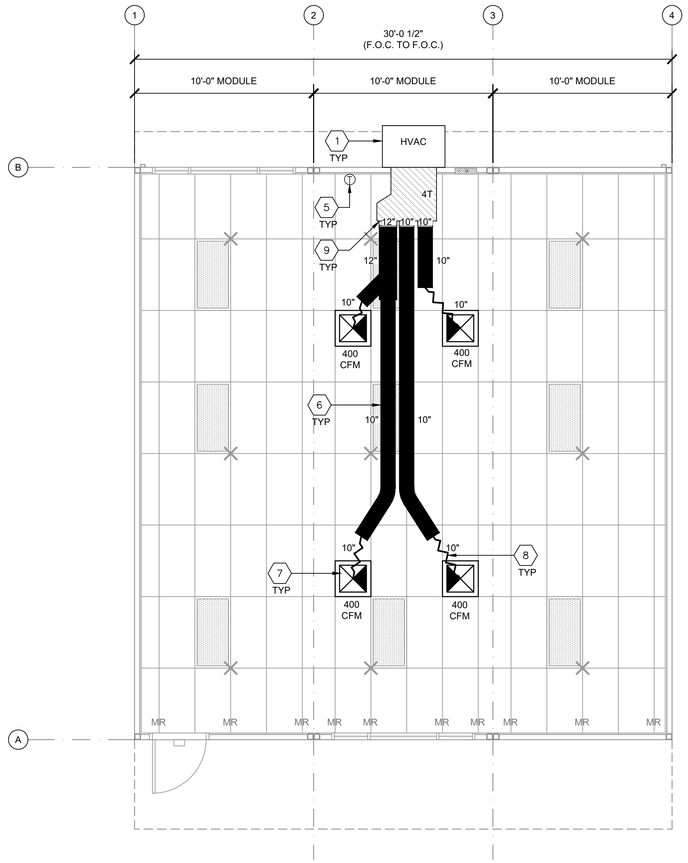

WALL HUNG OPTION

SCALE: 1/4"=1'-0" | 1

SHEET NOTES

1. WHERE TWO OR MORE HVAC UNITS SERVE A COMMON SPACE, UNITS SHALL BE EQUIPPED WITH A DUCT SMOKE DETECTOR FOR AUTOMATIC SHUTDOWN. INTERCONNECT WITH FIRE ALARM SYSTEM.
2. AIR-MOVING SYSTEMS SUPPLYING AIR IN EXCESS OF 2000 CUBIC FEET PER MINUTE TO ENCLOSED SPACES WITHIN THE BUILDING SHALL BE EQUIPPED WITH AN AUTOMATIC SHUTOFF.
3. AUTOMATIC SHUT-OFF IS NOT REQUIRED WHEN OCCUPIED ROOMS SERVED BY THE AIR HANDLING EQUIPMENT HAVE A DIRECT EXIT TO THE EXTERIOR AND THE TRAVEL DISTANCE DOES NOT EXCEED 100 FT. (PER C.M.C. 608.1 EXCEPTION #2.)
4. LIGHTING FIXTURE MAY BE INSTALLED ROTATED 90° FROM SHOWN TO MATCH T-GRID.
5. FOR T-BAR CEILING SPECIFICATIONS, SEE M1.7.
6. ACCEPTANCE TESTS TO BE COMPLETED ON NEWLY INSTALLED OR REPLACEMENT OF MECHANICAL SYSTEMS BEFORE PROJECT COMPLETION PER THE CALIFORNIA ENERGY SECTION 10-103. ACCEPTANCE TESTS MUST BE PERFORMED BY A CERTIFIED ACCEPTANCE TEST TECHNICIAN (ATT). THE ACCEPTANCE TESTING PROCEDURES MUST BE REPEATED, AND DEFICIENCIES CORRECTED UNTIL THE INSTALLATION OF THE SPECIFIED SYSTEMS CONFORM AND PASS THE REQUIRED ACCEPTANCE CRITERIA. COMPLETED NRCA FORMS SHALL BE SUBMITTED TO THE PROJECT INSPECTOR AND THE DISTRICT.
7. EACH PUBLIC K-12 SCHOOL CLASSROOM, AS LISTED IN TABLE 120.1-A OF THE CALIFORNIA ENERGY CODE, SHALL BE EQUIPPED WITH A CARBON DIOXIDE MONITOR OR SENSOR THAT MEETS THE FOLLOWING REQUIREMENTS:

1. THE MONITOR OR SENSOR SHALL BE PERMANENTLY AFFIXED IN A TAMPER-PROOF MANNER IN EACH CLASSROOM BETWEEN 3 AND 6 FEET (914 MM AND 1829 MM) ABOVE THE FLOOR AND AT LEAST 5 FEET (1524 MM) AWAY FROM DOORS AND OPERABLE WINDOWS.
2. WHEN THE MONITOR OR SENSOR IS NOT INTEGRAL TO AN ENERGY MANAGEMENT CONTROL SYSTEM (EMCS), THE MONITOR OR SENSOR SHALL DISPLAY THE CARBON DIOXIDE READINGS ON THE DEVICE. WHEN THE SENSOR IS INTEGRAL TO AN EMCS, THE CARBON DIOXIDE READINGS SHALL BE AVAILABLE TO AND REGULARLY MONITORED BY FACILITY PERSONNEL.
3. A MONITOR SHALL PROVIDE NOTIFICATION THROUGH A VISUAL INDICATOR ON THE MONITOR WHEN THE CARBON DIOXIDE LEVELS IN THE CLASSROOM HAVE EXCEEDED 1,100 PPM. A SENSOR INTEGRAL TO AN EMCS SHALL PROVIDE NOTIFICATION TO FACILITY PERSONNEL THROUGH A VISUAL AND/OR AUDIBLE INDICATOR WHEN THE CARBON DIOXIDE LEVELS IN THE CLASSROOM HAVE EXCEEDED 1,100 PPM.
4. THE MONITOR OR SENSOR SHALL MEASURE CARBON DIOXIDE LEVELS AT MINIMUM 15-MINUTE INTERVALS AND SHALL MAINTAIN A RECORD OF PREVIOUS CARBON DIOXIDE MEASUREMENTS OF NOT LESS THAN 30 DAYS DURATION.
5. THE MONITOR OR SENSOR USED TO MEASURE CARBON DIOXIDE LEVELS SHALL HAVE THE CAPACITY TO MEASURE CARBON DIOXIDE LEVELS WITH A RANGE OF 400 PPM TO 2000 PPM OR GREATER.
6. THE MONITOR OR SENSOR SHALL BE CERTIFIED BY THE MANUFACTURER TO BE ACCURATE WITHIN 75 PPM AT 1,000 PPM CARBON DIOXIDE CONCENTRATION AND SHALL BE CERTIFIED BY THE MANUFACTURER TO REQUIRE CALIBRATION NO MORE FREQUENTLY THAN ONCE EVERY 5 YEARS.

KEY NOTES

1. WALL HUNG HVAC UNIT - SEE 10/M1.4.
2. NOT USED
3. NOT USED
3A. NOT USED
4. NOT USED
5. THERMOSTAT - 48" A.F.F, MAX TO TOP OF BOX
6. CONCEALED SUPPLY AIR DUCT ABOVE T-BAR CEILING - SEE 1/M1.4.
7. TYPICAL 4-WAY SUPPLY AIR REGISTER LOCATION AND SIZE MAY VARY PER CEILING LAYOUT AND BUILDING SIZE - SEE 7/M1.5.
8. FLEX DUCT - NOMINAL 10" MIN. (MAY VARY) - SEE 8/M1.5.
9. RETURN AIR AS PART OF UNIT.

NOTE: FLEXIBLE AIR DUCTS AND CONNECTORS SHALL BE NOT MORE THAN 5 FEET IN LENGTH AND SHALL NOT BE USED IN LIEU OF RIGID ELBOWS OR FITTINGS. FLEXIBLE AIR DUCTS SHALL BE PERMITTED TO BE USED AS AN ELBOW AT A TERMINAL DEVICE PER ENERGY CODE 120.4 AND CMC 603.4.1

BUILDING SIZE SCHEDULE

BUILDING SIZE (FT)	TOTAL # OF 12' WIDE MODULES	TOTAL # OF CENTER MODULES	OVERALL SIZE
☒ 30'x32'	3	1	30'-0"
☐ 40'x32'	4	2	40'-0"
☐ 50'x32'	5	3	50'-0"
☐ 60'x32'	6	4	60'-0"

IDENTIFICATION STAMP
DIV. OF THE STATE ARCHITECT
APP: 02-122533 INC:
REVIEWED FOR
SS ☑ FLS ☑ ACS ☑
DATE: 05/22/2024

American Modular Systems
787 Spreckels Ave., Manteca, CA 95336
Phone (209) 825-1921 Fax (209) 825-7018
www.americanmodular.com

INTELLECTUAL-PROPERTY & PROPRIETARY RIGHTS STATEMENT
COPYRIGHT © AMERICAN MODULAR SYSTEMS (AMS)
AMS OWNS ALL COPYRIGHT AND OTHER INTELLECTUAL-PROPERTY AND PROPRIETARY RIGHTS IN THESE DRAWINGS, SPECIFICATIONS, AND THE MATERIAL CONTAINED HEREIN. CERTAIN ELEMENTS SHOWN IN THESE DOCUMENTS ARE REGISTERED TRADEMARKS OF AMS. ALL PATENTABLE MATERIALS CONTAINED IN THESE DOCUMENTS AND ORIGINATING WITH AMS WILL REMAIN THE SOLE PROPERTY OF AMS. THESE DRAWING, SPECIFICATIONS, AND THE MATERIAL CONTAINED HEREIN MAY NOT BE REPRODUCED, TRANSMITTED, COPIED, DISTRIBUTED, MODIFIED, OR OTHERWISE DISPOSED OF (DIRECTLY OR INDIRECTLY) AND MAY NOT BE USED (IN WHOLE OR IN PART) TO ASSIST IN THE CONSTRUCTION, DESIGN, OR OTHER MAKING OF, OR FOR THE PURPOSE OF FURNISHING ANY INFORMATION FOR THE CONSTRUCTION, DESIGN, OR OTHER MAKING OF, ANY BUILDINGS (MODULAR OR OTHERWISE), DRAWINGS, SPECIFICATIONS, PRINTS, APPARATUS, OR PARTS THEREOF, EXCEPT AS EXPRESSLY PERMITTED BY WRITTEN CONSENT OF, OR IN A WRITTEN AGREEMENT WITH, AMS. SUBMITTAL OR DISTRIBUTION TO MEET OFFICIAL REGULATORY REQUIREMENTS WILL NOT BE CONSTRUED AS PUBLICATION IN DEROGATION OF AMS'S COPYRIGHT OR OTHER INTELLECTUAL-PROPERTY OR PROPRIETARY RIGHTS.

PRE-CHECKED SET NAME

30' x 32' THRU 60' x 32'

2GO

SITE SPECIFIC PROJECT NAME

GALT JOINT UESD
VERNON GREER ES
(2) 30'X32' BUILDINGS

MANUFACTURER PROFESSIONAL OF RECORD ON PC

LICENSED ARCHITECT
ANTHONY PATRICK HOWARD
No. C12631
Ren. 3-31-25
STATE OF CALIFORNIA

THESE DRAWINGS ARE PRELIMINARY AND NOT FOR CONSTRUCTION UNLESS STAMPED & SIGNED BY THE DESIGN PROFESSIONAL OF RECORD.

REVISIONS

1
2
3
4

DRAWN BY:	A.V.
SCALE:	AS NOTED
DATE:	01/04/24
PROJECT NO:	1878-24

SHEET TITLE:

TYPICAL MECHANICAL PLAN OPTIONS

SHEET NUMBER:

M1.1

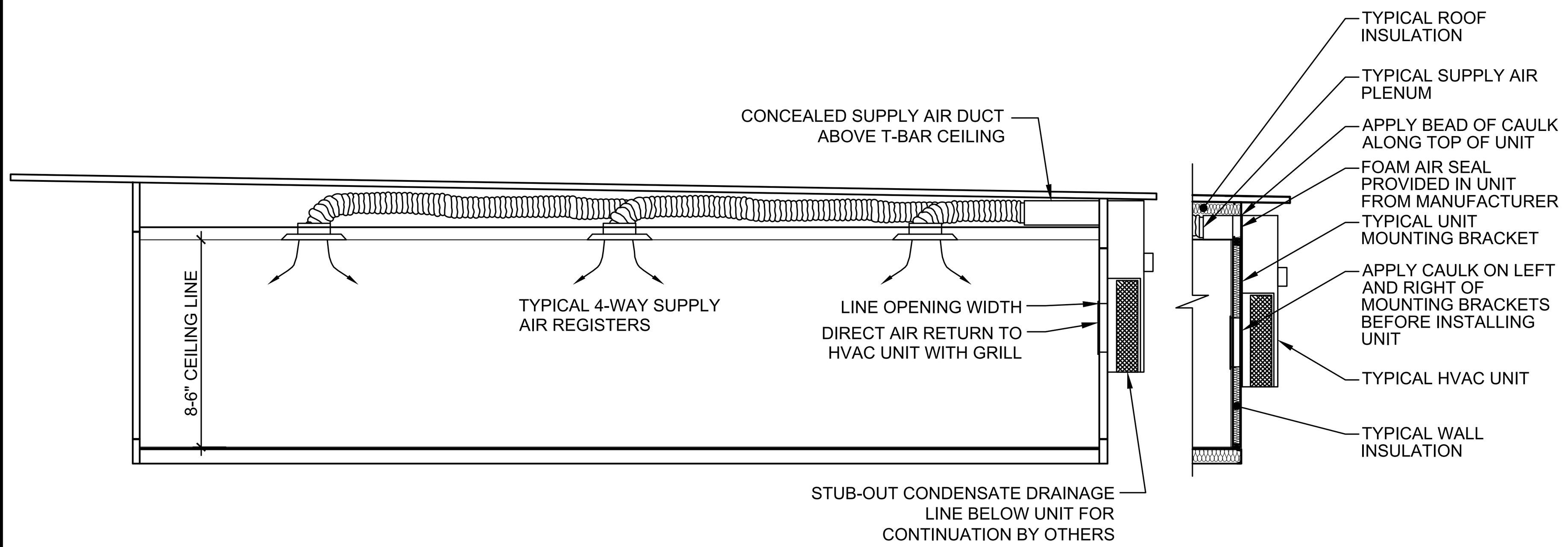

TYPICAL MECHANICAL SECTION
SCALE: 3/16" = 1'-0" | 1

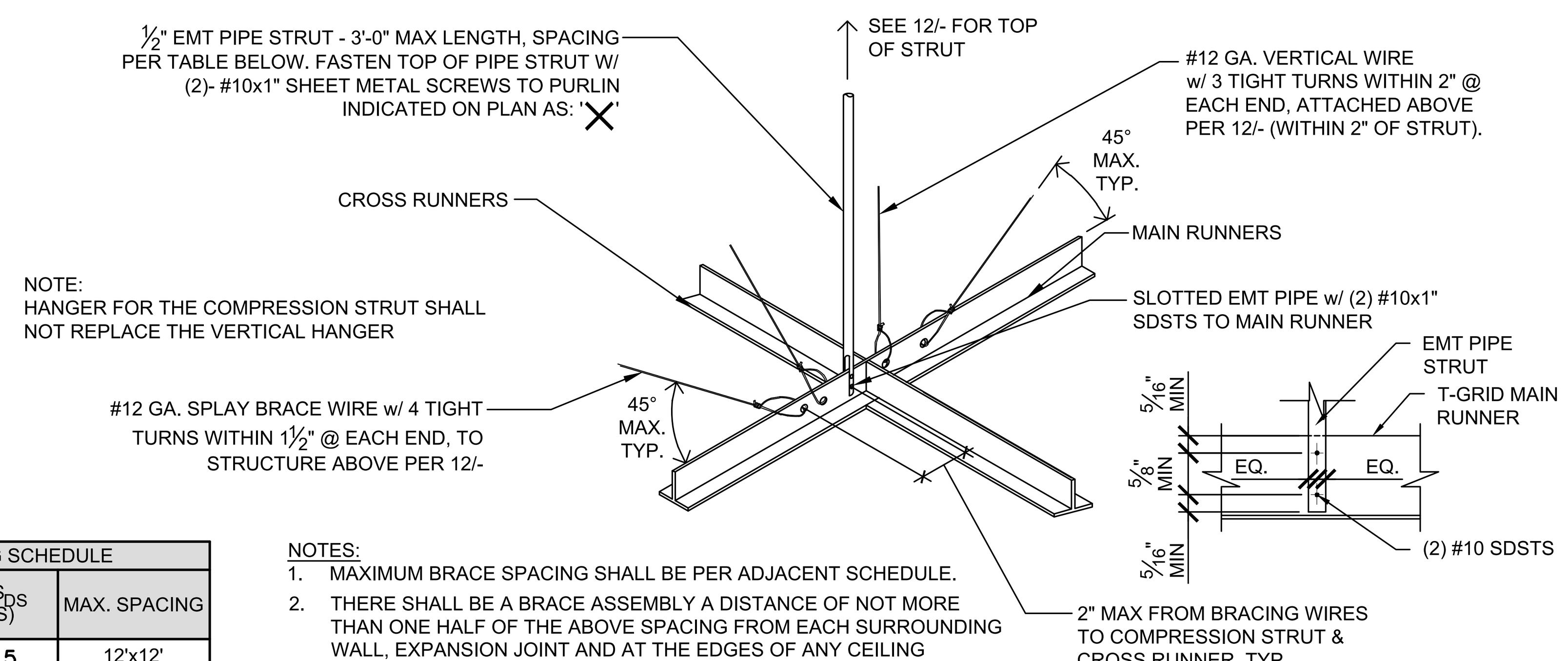

BRACING SCHEDULE	
SITE SPECIFIC S_{DS} (PER SHEET TS)	MAX. SPACING
☐ $S_{DS} \leq 1.15$	12'x12'
☐ $1.15 \leq S_{DS} \leq 1.73$	8'x12'
☐ $S_{DS} > 1.73$	8'x8'

NOTES:
1. MAXIMUM BRACE SPACING SHALL BE PER ADJACENT SCHEDULE.
2. THERE SHALL BE A BRACE ASSEMBLY A DISTANCE OF NOT MORE THAN ONE HALF OF THE ABOVE SPACING FROM EACH SURROUNDING WALL, EXPANSION JOINT AND AT THE EDGES OF ANY CEILING VERTICAL OFFSET. FOR EXAMPLE, WHERE THE BRACE SPACING IS 8'x12", THE DISTANCE SHALL BE 4 FEET IN THE DIRECTION OF THE 8 FOOT SPACING AND 6 FEET IN THE DIRECTION OF THE 12 FOOT SPACING. FOR FURTHER INFORMATION REFER TO SPECIFICATIONS ON SHEET M1.7.

STRUT/SPLAY WIRE ASSEMBLY DETAIL
NOT TO SCALE | 2

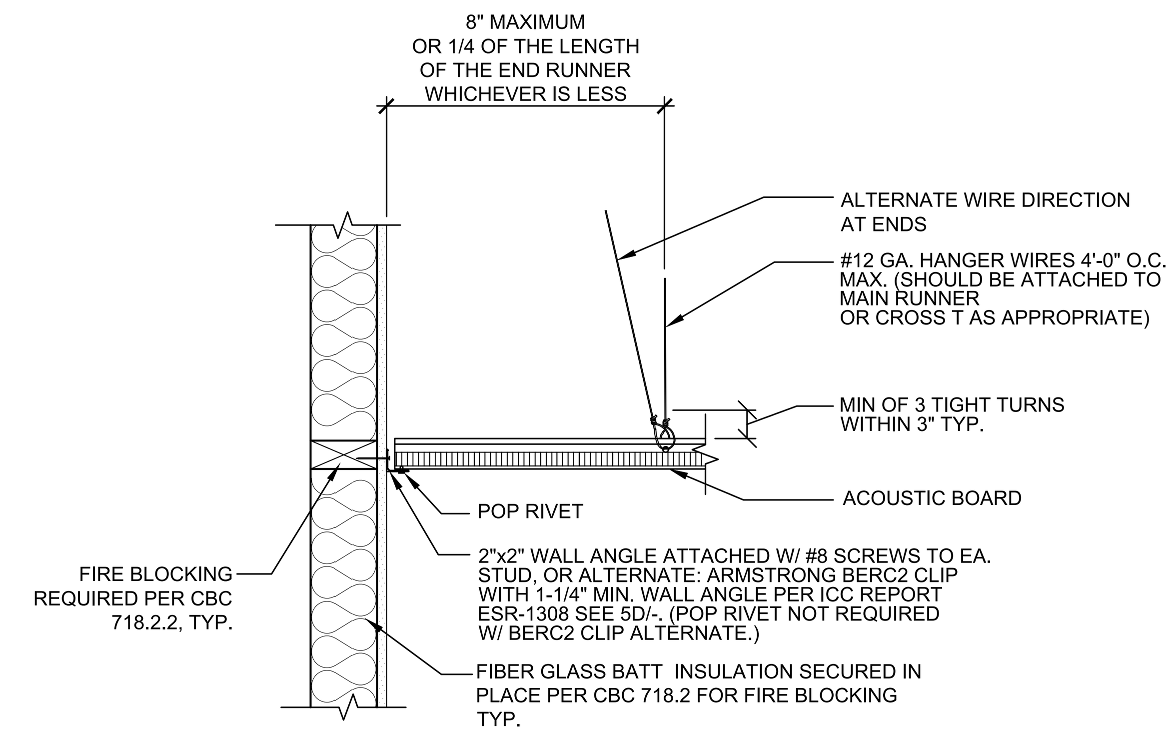

(A) FIXED END

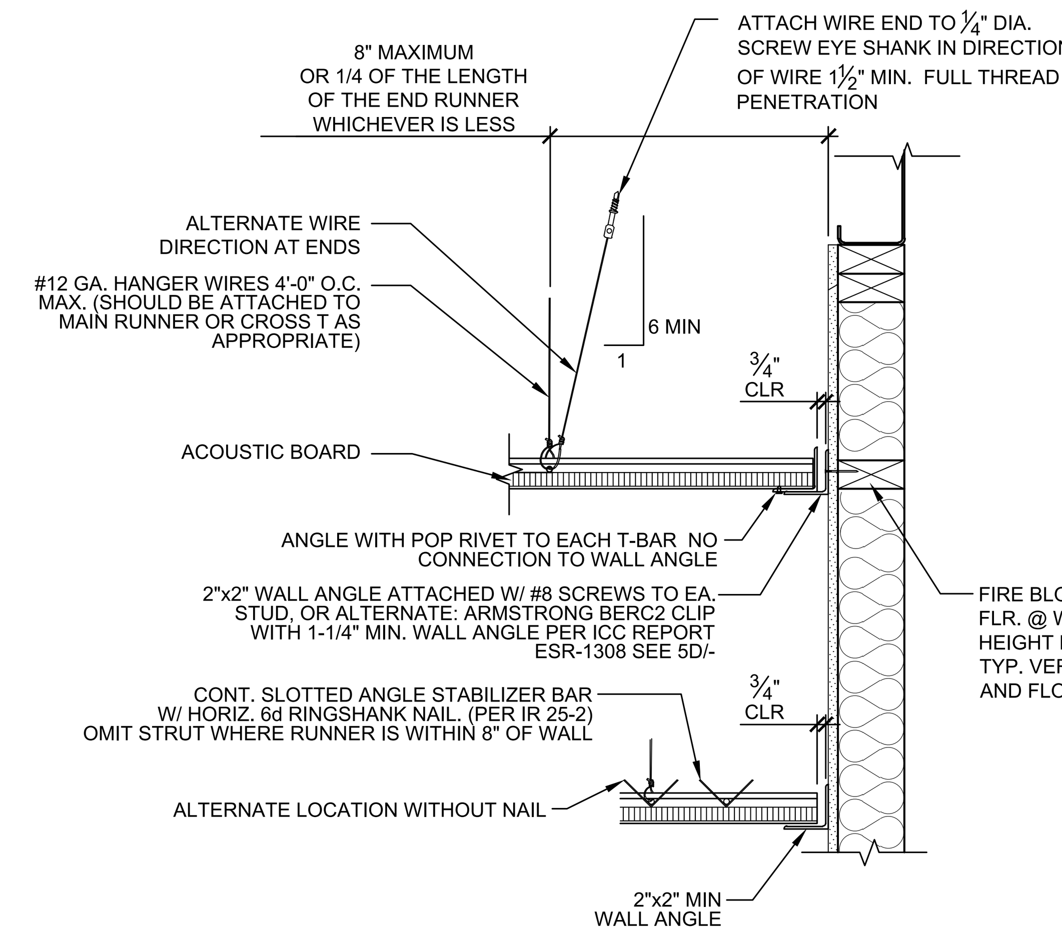

(B) FREE END

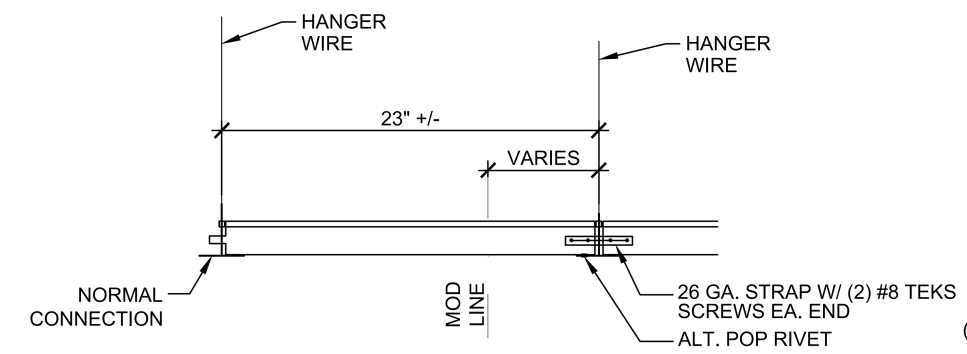

(C) RUNNER SPLICE AND CEILING CONNECTION @ MODULE LINE

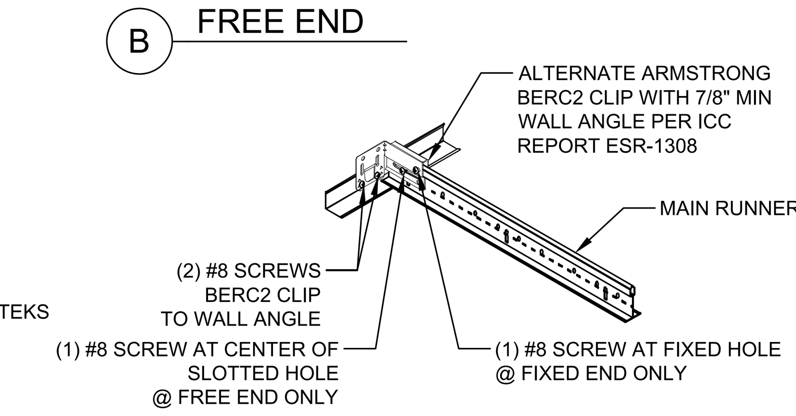

(D) ALTERNATE BERC2 CLIP DETAIL

NOTE:
NAILS AT THE END OF HORIZONTAL STRUTS ARE TO BE PLACED WITH NAIL HEAD TOWARD CENTERLINE OF SPAN OF STRUT.

SUSPENDED CEILING ATTACHMENT DETAILS
SCALE: 1-1/2" = 1'-0" | 5

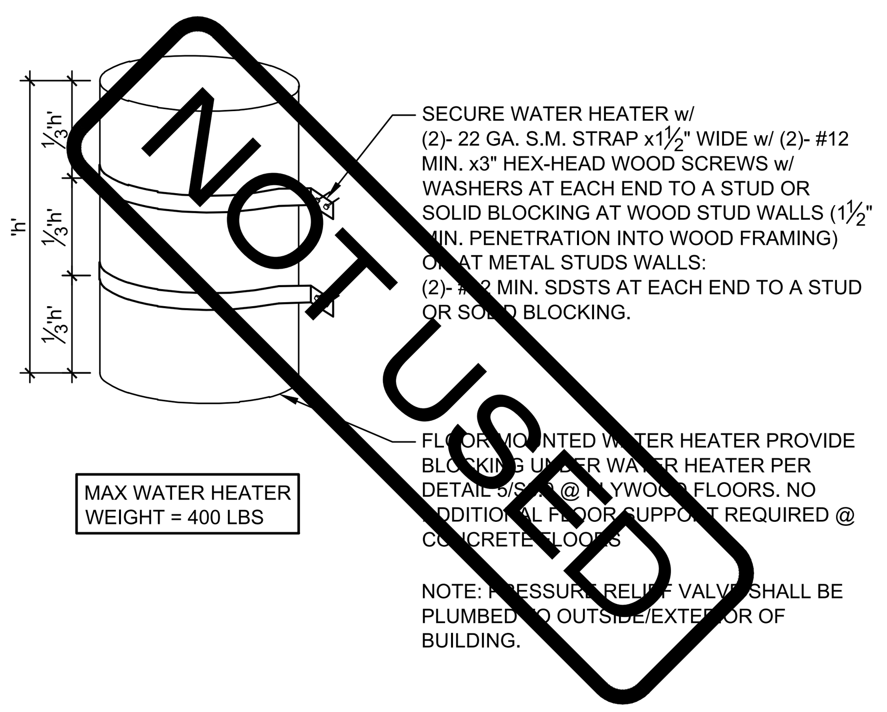

WATER HEATER STRAP DETAIL
NOT TO SCALE | 6

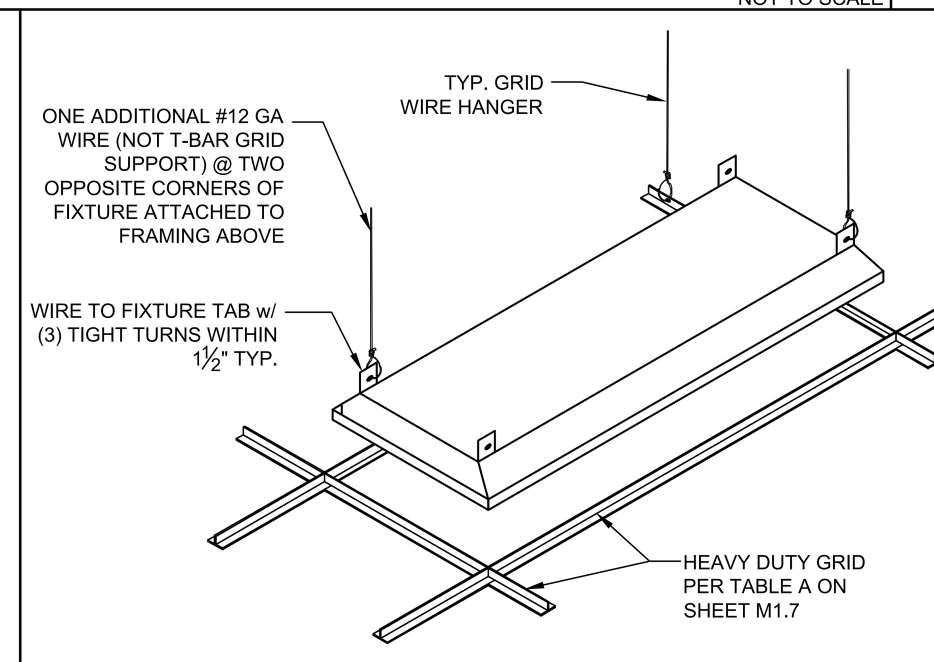

PROVIDE (1) #8x¾" SMS THRU GRID TO LIGHT FIXTURE @ 2 MIN. CORNERS

NOTE: FIXTURE WEIGHT LESS THAN OR EQUAL TO 56 LBS

LIGHT FIXTURE ATTACHMENT
NOT TO SCALE | 7

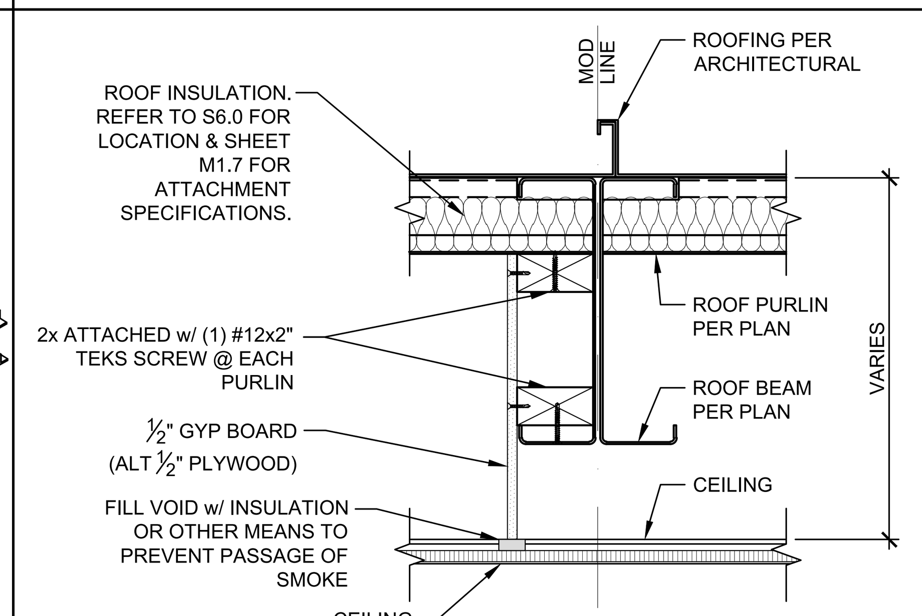

C.B.C. SECTION 718.4.3:
"DRAFTSTOPPING SHALL BE INSTALLED IN ATTICS AND CONCEALED ROOF SPACES, SUCH THAT ANY HORIZONTAL AREA DOES NOT EXCEED 3,000 SQUARE FEET."
NOTE EXCEPTION #2:
IN GROUP A, E, H, I, L OCCUPANCIES, WHERE AN AUTOMATIC SPRINKLER SYSTEM IN ACCORDANCE WITH SECTION 903.3.1.1 IS INSTALLED, THE AREA BETWEEN DRAFT STOPS MAY BE 9,000 SQUARE FEET AND THE GREATEST HORIZONTAL DISTANCE MAY BE 100 FEET.

CEILING DRAFT STOP DETAIL
SCALE: 1-1/2" = 1'-0" | 8

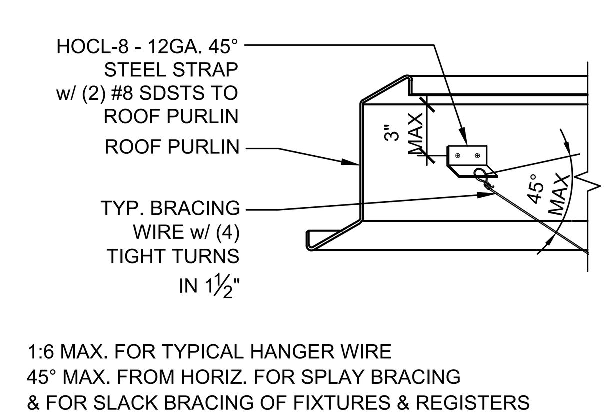

1:6 MAX. FOR TYPICAL HANGER WIRE
45° MAX. FROM HORIZ. FOR SPLAY BRACING
& FOR SLACK BRACING OF FIXTURES & REGISTERS

AT STEEL JOIST OR RAFTER

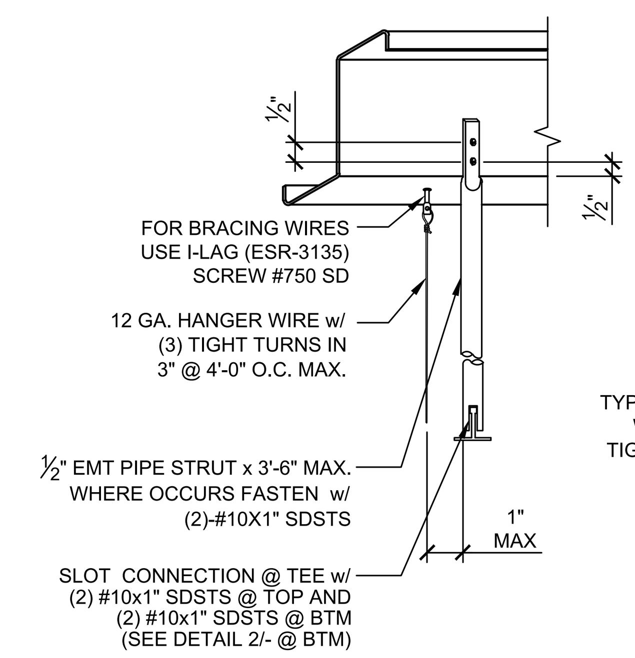

TO BOTTOM OF WEB OF JOIST OR RAFTER

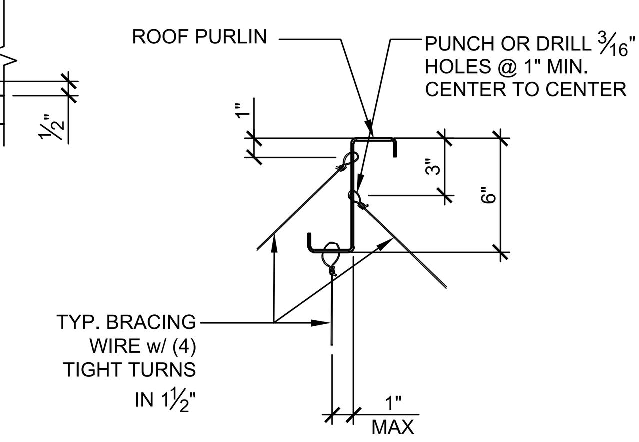

ALTERNATE WIRE CONNECTIONS

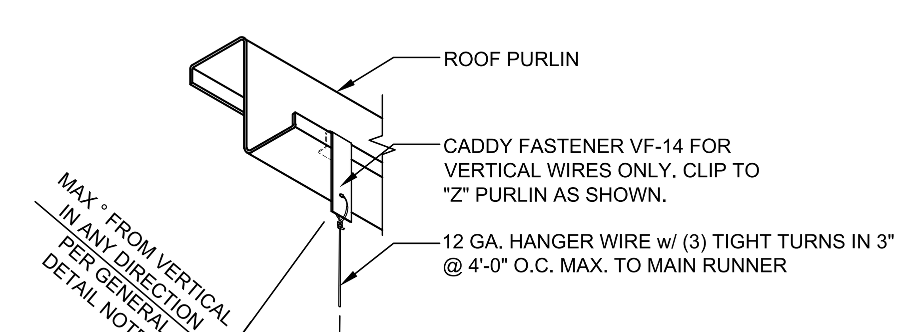

ALTERNATE WIRE CONNECTIONS

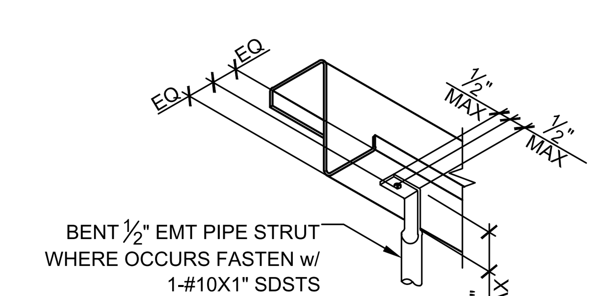

TO BOTTOM OF JOIST OR RAFTER

GENERAL DETAIL NOTES:
1. TYPICAL HANGER WIRES & VERTICAL STRUTS SHALL BE INSTALLED AT A MAXIMUM 1:6 ANGLE FROM VERTICAL.
2. TYPICAL SPLAY BRACING WIRES & WIRES FOR SLACK BRACING OF FIXTURES OR REGISTERS SHALL BE INSTALLED AT A MAXIMUM 45° ANGLE FROM THE SURFACE TO WHICH THEY ARE ATTACHED.

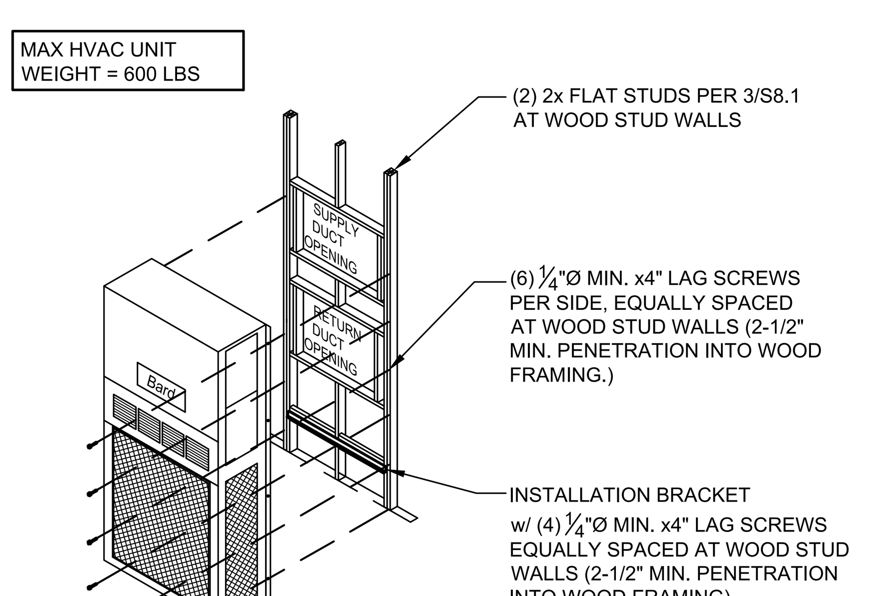

NOT USED
9

WALL MOUNT HVAC ANCHORAGE
NOT TO SCALE | 10

NOT USED
11

SUSPENDED CEILING TO PURLIN CONNECTION DETAILS
NOT TO SCALE | 12

IDENTIFICATION STAMP
DIV. OF THE STATE ARCHITECT
APP: 02-122533 INC:
REVIEWED FOR
SS ☑ FLS ☑ ACS ☑
DATE: 05/22/2024

American Modular Systems
787 Spreckels Ave., Manteca, CA 95336
Phone (209) 825-1921 Fax (209) 825-7018
www.americanmodular.com

INTELLECTUAL-PROPERTY & PROPRIETARY RIGHTS STATEMENT
COPYRIGHT © AMERICAN MODULAR SYSTEMS (AMS)
AMS OWNS ALL COPYRIGHT AND OTHER INTELLECTUAL-PROPERTY AND PROPRIETARY RIGHTS IN THESE DRAWINGS, SPECIFICATIONS, AND THE MATERIAL CONTAINED HEREIN. CERTAIN ELEMENTS SHOWN IN THESE DOCUMENTS ARE REGISTERED TRADEMARKS OF AMS. ALL PATENTABLE MATERIALS CONTAINED IN THESE DOCUMENTS AND ORIGINATING WITH AMS WILL REMAIN THE SOLE PROPERTY OF AMS. THESE DRAWING, SPECIFICATIONS, AND THE MATERIAL CONTAINED HEREIN MAY NOT BE REPRODUCED, TRANSMITTED, COPIED, DISTRIBUTED, MODIFIED, OR OTHERWISE DISPOSED OF (DIRECTLY OR INDIRECTLY) AND MAY NOT BE USED (IN WHOLE OR IN PART) TO ASSIST IN THE CONSTRUCTION, DESIGN, OR OTHER MAKING OF, OR FOR THE PURPOSE OF FURNISHING ANY INFORMATION FOR THE CONSTRUCTION, DESIGN, OR OTHER MAKING OF, ANY BUILDINGS (MODULAR OR OTHERWISE), DRAWINGS, SPECIFICATIONS, PRINTS, APPARATUS, OR PARTS THEREOF, EXCEPT AS EXPRESSLY PERMITTED BY WRITTEN CONSENT OF, OR IN A WRITTEN AGREEMENT WITH, AMS. SUBMITTAL OR DISTRIBUTION TO MEET OFFICIAL REGULATORY REQUIREMENTS WILL NOT BE CONSTRUED AS PUBLICATION IN DEROGATION OF AMS'S COPYRIGHT OR OTHER INTELLECTUAL-PROPERTY OR PROPRIETARY RIGHTS.

PRE-CHECKED SET NAME
30' x 32' THRU 60' x 32'
2GO®

SITE SPECIFIC PROJECT NAME
.
.
.

APPROVED
DIV. OF THE STATE ARCHITECT
APP: 04-122041 PC
REVIEWED FOR
SS ☑ FLS ☑ ACS ☑ CG ☑
DATE: 04/05/2024

☐ 2022 CBC PRE-CHECK (PC) DOCUMENT
A SEPARATE PROJECT APPLICATION FOR CONSTRUCTION IS REQUIRED.

MANUFACTURER PROFESSIONAL OF RECORD ON PC

LICENSED ARCHITECT
RANDAL PATRICK CAVANAGH
No. C12631
Ren. 3-31-25
STATE OF CALIFORNIA

THESE DRAWINGS ARE PRELIMINARY AND NOT FOR CONSTRUCTION UNLESS STAMPED & SIGNED BY THE DESIGN PROFESSIONAL OF RECORD.

REVISIONS
1
2
3
4

DRAWN BY:	A.A.
SCALE:	AS NOTED
DATE:	DD/MM/YY
PROJECT NO:	XXXX-XX

SHEET TITLE:
MECHANICAL AND CEILING DETAILS

SHEET NUMBER:
M1.4

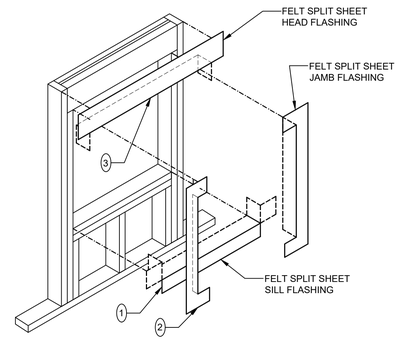

WINDOW CONDITION

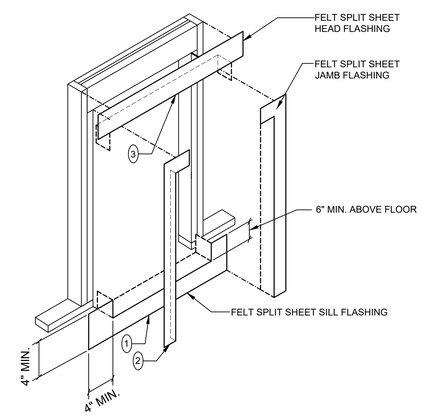

DOOR CONDITION

(#) = SEQUENCE OF ORDER

FLASHING @ WALL OPENINGS

NOT TO SCALE | 2

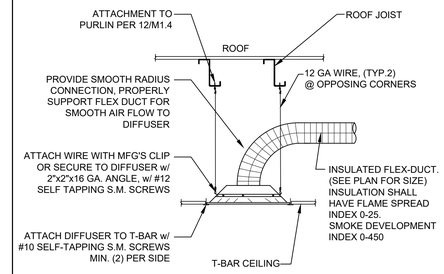

REGISTER MOUNTING DETAIL

NOT TO SCALE | 7

NOTES:

1. DUCTWORK SHALL BE SUPPORTED FROM ROOF JOISTS AT 4'-0" O.C.MAX TO ELIMINATE SAGGING.
2. FLEX DUCT (5'-0" MAX LENGTH) SHALL BE PULLED TIGHT TO ELIMINATE SAGGING.
3. DUCT TO PLENUM ATTACHMENT SHALL BE (3) #8 SCREWS & COVERED WITH 367-17 TAPE (UL181B-FX).
4. FOR DUCT ATTACHMENT TO DIFFUSER - SEE DETAIL 7/-.
5. ALL DUCTS TO BE SEALED WITH 367 MASTIC TAPE. OUTSIDE OF THE INSULATING LINER ON THE FLEX DUCT TO BE SEALED WITH 558CA CODE APPROVED DUCT TAPE.

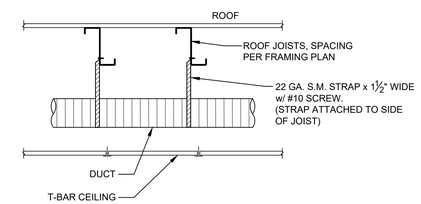

FLEX DUCTING SUPPORT DETAIL

NOT TO SCALE | 8

NOT USED

1

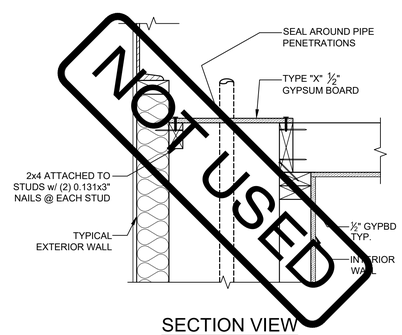

SECTION VIEW

NOTE:
REFER TO DETAILS 8/M1.6 AND 13/M1.6 FOR ADDITIONAL FRAMING DETAILS

DRAFT STOP @ PLUMBING CHASE

SCALE: 1-1/2" = 1'-0" | 4

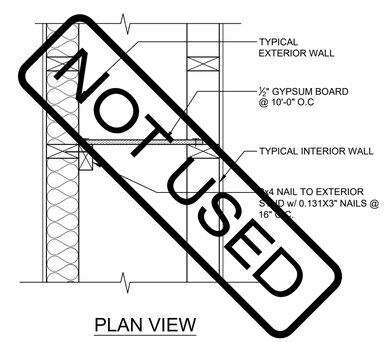

PLAN VIEW

DRAFT STOP @ PLUMBING CHASE

SCALE: 1-1/2" = 1'-0" | 5

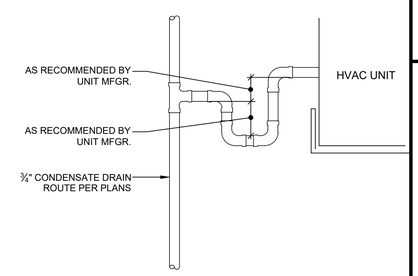

CONDENSATE DETAIL

NOT TO SCALE | 9

NOT USED

3

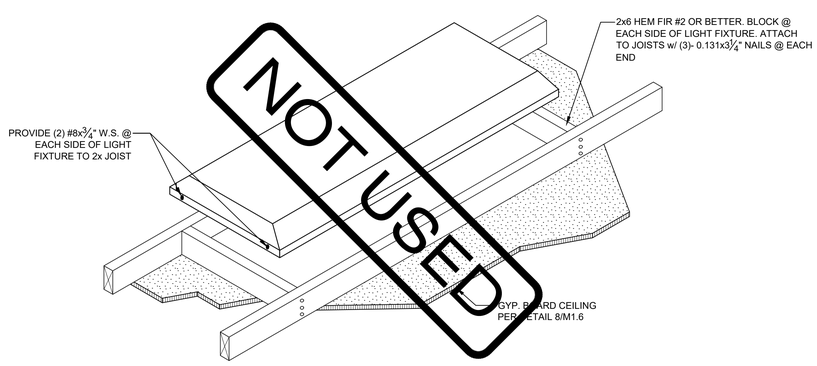

LIGHT FIXTURE ATTACHMENT DETAIL

NOT TO SCALE | 6A

NOT USED

6B

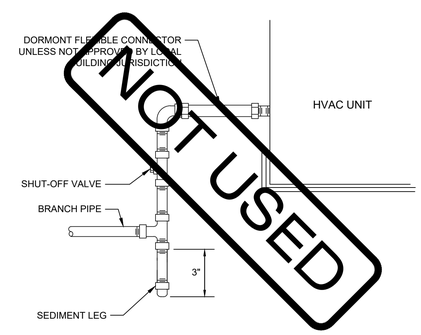

GAS CONNECTION DETAIL

NOT TO SCALE | 10

IDENTIFICATION STAMP
DIV. OF THE STATE ARCHITECT
APP: 02-122533 INC:
REVIEWED FOR
SS ☑ FLS ☑ ACS ☑
DATE: 05/22/2024

American Modular Systems
787 Spreckels Ave., Manteca, CA 95336
Phone (209) 825-1921 Fax (209) 825-7018
www.americanmodular.com

INTELLECTUAL-PROPERTY & PROPRIETARY RIGHTS STATEMENT
COPYRIGHT © AMERICAN MODULAR SYSTEMS (AMS)
AMS OWNS ALL COPYRIGHT AND OTHER INTELLECTUAL-PROPERTY AND PROPRIETARY RIGHTS IN THESE DRAWINGS, SPECIFICATIONS, AND THE MATERIAL CONTAINED HEREIN. CERTAIN ELEMENTS SHOWN IN THESE DOCUMENTS ARE REGISTERED TRADEMARKS OF AMS. ALL PATENTABLE MATERIALS CONTAINED IN THESE DOCUMENTS AND ORIGINATING WITH AMS WILL REMAIN THE SOLE PROPERTY OF AMS. THESE DRAWING, SPECIFICATIONS, AND THE MATERIAL CONTAINED HEREIN MAY NOT BE REPRODUCED, TRANSMITTED, COPIED, DISTRIBUTED, MODIFIED, OR OTHERWISE DISPOSED OF (DIRECTLY OR INDIRECTLY) AND MAY NOT BE USED (IN WHOLE OR IN PART) TO ASSIST IN THE CONSTRUCTION, DESIGN, OR OTHER MAKING OF, OR FOR THE PURPOSE OF FURNISHING ANY INFORMATION FOR THE CONSTRUCTION, DESIGN, OR OTHER MAKING OF, ANY BUILDINGS (MODULAR OR OTHERWISE), DRAWINGS, SPECIFICATIONS, PRINTS, APPARATUS, OR PARTS THEREOF, EXCEPT AS EXPRESSLY PERMITTED BY WRITTEN CONSENT OF, OR IN A WRITTEN AGREEMENT WITH, AMS. SUBMITTAL OR DISTRIBUTION TO MEET OFFICIAL REGULATORY REQUIREMENTS WILL NOT BE CONSTRUED AS PUBLICATION IN DEROGATION OF AMS'S COPYRIGHT OR OTHER INTELLECTUAL-PROPERTY OR PROPRIETARY RIGHTS.

PRE-CHECKED SET NAME

30' x 32' THRU 60' x 32'

2GO

SITE SPECIFIC PROJECT NAME

APPROVED
DIV. OF THE STATE ARCHITECT
APP: 04-122041 PC
REVIEWED FOR
SS ☑ FLS ☑ ACS ☑ CG ☑
DATE: 04/05/2024

☐ 2022 CBC PRE-CHECK (PC) DOCUMENT
A SEPARATE PROJECT APPLICATION FOR CONSTRUCTION IS REQUIRED.

MANUFACTURER PROFESSIONAL OF RECORD ON PC

LICENSED ARCHITECT
ANTHONY PATRICK CARNEY
No. C12631
Rem. 3-31-25
STATE OF CALIFORNIA

THESE DRAWINGS ARE PRELIMINARY AND NOT FOR CONSTRUCTION UNLESS STAMPED & SIGNED BY THE DESIGN PROFESSIONAL OF RECORD.

REVISIONS

1
2
3
4

DRAWN BY:	A.A.
SCALE:	AS NOTED
DATE:	DD/MM/YY
PROJECT NO:	XXXX-XX

SHEET TITLE:

MECHANICAL & CEILING DETAILS

SHEET NUMBER:

M1.5

1. IT IS THE RESPONSIBILITY OF THE AOR & EOR TO ENSURE THAT ALL SPECIFICATIONS MEET THE MINIMUM REQUIREMENTS OF THE CURRENT EDITIONS OF THE CALIFORNIA STATE TITLES 19 & 24. APPROVAL OF THESE SPECIFICATIONS DOES NOT CONSTITUTE APPROVAL FOR WAIVER OR ANY REQUIREMENTS OF THOSE REGULATIONS.
2. CEILING NOTES BASED ON IR 25-2, APPENDIX A - REFER TO DSA IR 25-2 FOR COMPLETE LIST.

GENERAL NOTES

1. CEILING SYSTEM GENERAL NOTES

1.01 CEILING SYSTEM COMPONENTS SHALL COMPLY WITH ASTM C635 AND SECTION 5.1 OF ASTM E580.

1.02 THE CEILING GRID SYSTEM MUST BE RATED HEAVY DUTY AS DEFINED BY ASTM C635.

1.03 CEILING SYSTEMS. THE FOLLOWING CEILING SYSTEM(S) IS/ARE PART OF THE SCOPE OF THIS PROJECT:

MANUFACTURER: **ARMSTONG (OR EQUAL)**

PRODUCT NAME: **PRELUDE XL AND PRELUDE XL HIGH RECYLED CONTENT(HRC) ICC**

EVALUATION REPORT TYPE AND NUMBER: **ESR#1308**

MAIN RUNNER PART, MODEL, OR CATALOG NUMBER: **7301**

CROSS RUNNER PART, MODEL, CATALOG NUMBER: **4' CROSS T # XL7341 & 2' CROSS T # XL8320**

1.04 SEISMIC WALL CLIP: BERC2 CLIP MANUFACTURER'S MODEL: 7810

1.05 CEILING PANELS SHALL NOT SUPPORT ANY LUMINARIES, AIR TERMINALS OR DEVICES.

1.06 FOR CEILING INSTALLATIONS UTILIZING ACOUSTICAL TILE PANELS OF MINERAL OR GLASS FIBER, IT IS NOT MANDATORY TO PROVIDE ¾" CLEARANCE BETWEEN THE ACOUSTICAL TILE PANELS AND THE WALL ON THE SIDES OF THE CEILING WHICH ARE FREE TO SLIP. FOR ALL OTHER CEILING PANEL TYPES, PROVIDE ¾" CLEARANCE BETWEEN THE CEILING PANEL AND THE WALL ON THE SIDES OF THE CEILING FREE TO SLIP. CLEARANCE BETWEEN CEILING GRID RUNNERS/MEMBERS AND WALLS SHALL COMPLY WITH THE DETAILS ON THESE DRAWINGS REGARDLESS OF CEILING TILE MATERIAL.

2. MATERIALS

2.01 CEILING WIRE SHALL BE CLASS 1 ZINC COATED (GALVANIZED) CARBON STEEL CONFORMING TO ASTM A641. WIRE SHALL BE #12 GAUGE (0.106" DIAMETER) WITH SOFT TEMPER AND MINIMUM ULTIMATE TENSILE STRENGTH = 70 KSI.

2.02 GALVANIZED SHEET STEEL (INCLUDING THAT USED FOR METAL STUD AND TRACK COMPRESSION STRUTS/POST) SHALL CONFORM TO ASTM A653, OR OTHER EQUIVALENT SHEET STEEL LISTED IN SECTION A3.1 OF THE NORTH AMERICAN SPECIFICATION FOR THE DESIGN OF COLD-FORMED STEEL STRUCTURAL MEMBERS, (AISI S100). MATERIAL 43 MIL (18 GAUGE) AND LIGHTER SHALL HAVE MINIMUM YIELD STRENGTH OF 33 KSI. MATERIAL 54 MIL (16 GAUGE) AND HEAVIER SHALL HAVE A MINIMUM YIELD STRENGTH OF 50 KSI.

2.03 ELECTRICAL METALLIC TUBE (EMT) SHALL BE ANSI C80.3/UL 797 CARBON STEEL WITH G90 GALVANIZING. EMT SHALL HAVE MINIMUM YIELD STRENGTH (F_Y) OF 30 KSI AND MINIMUM ULTIMATE STRENGTH (F_U) OF 48 KSI.

3. ATTACHMENT OF HANGER AND BRACING WIRES

3.01 SEPARATE ALL CEILING HANGER AND BRACING WIRES AT LEAST 6 INCHES FROM ALL UNBRACED DUCTS, PIPES, CONDUIT, ETC.

3.02 HANGER AND BRACING WIRES SHALL NOT ATTACH TO OR BEND AROUND OBSTRUCTIONS INCLUDING BUT NOT LIMITED TO PIPING, DUCTWORK, CONDUIT AND EQUIPMENT.

3.03 HANGER WIRES THAT ARE MORE THAN ONE (HORIZONTAL) IN SIX (VERTICAL) OUT OF PLUMB SHALL HAVE COUNTER-SLOPING WIRES.

3.04 SLACK SAFETY WIRES SHALL BE CONSIDERED HANGER WIRES FOR INSTALLATION AND TESTING REQUIREMENTS.

3.05 HANGER AND BRACING WIRE ANCHORAGE TO THE STRUCTURE SHALL BE INSTALLED IN SUCH A MANNER THAT THE DIRECTION OF THE ANCHORAGE ALIGNS CLOSELY WITH THE DIRECTION OF THE WIRE (E.G., BRACING WIRE CEILING CLIPS MUST BE BENT AS SHOWN IN THE DETAILS AND ROTATED AS REQUIRED TO ALIGN CLOSELY WITH THE DIRECTION OF THE WIRE, SCREW EYES IN WOOD MUST BE INSTALLED SO THEY ALIGN CLOSELY WITH THE DIRECTION OF THE WIRE, ETC.).

4. FASTENERS AND WELDING

4.01 SHEET METAL SCREWS SHALL COMPLY WITH ASTM C1513 AND ASME B18.6.3. PENETRATION OF SCREWS THROUGH JOINED MATERIAL SHALL NOT BE LESS THAN THREE EXPOSED THREADS.

4.02 N/A

4.03 N/A

4.04 IF NOT OTHERWISE SPECIFIED IN THE EVALUATION REPORT, POWER-ACTUATED FASTENERS INSTALLED IN STEEL SHALL BE INSTALLED SO THE ENTIRE POINTED END OF THE FASTENER IS DRIVEN THROUGH THE STEEL MEMBER

4.05 POWER-ACTUATED FASTENERS IN CONCRETE OR MASONRY ARE NOT PERMITTED FOR BRACING WIRES.

4.06 CONCRETE REINFORCEMENT AND PRE-STRESSING TENDONS SHALL BE LOCATED BY NON-DESTRUCTIVE MEANS PRIOR TO INSTALLING POST-INSTALLED ANCHORS.

4.07 WELDING SHALL BE IN ACCORDANCE WITH AWS D1.3 USING E60XX SERIES ELECTRODES.

5. TESTING

5.01 ALL FIELD TESTING MUST BE PERFORMED IN THE PRESENCE OF THE PROJECT INSPECTOR.

5.02 POST-INSTALLED ANCHORS IN CONCRETE USED TO SUPPORT HANGER WIRES SHALL BE TESTED AT A FREQUENCY OF 10 PERCENT. POWER-ACTUATED FASTENERS IN CONCRETE SHALL BE FIELD TESTED FOR 200 POUNDS IN TENSION. ALL OTHER POST-INSTALLED ANCHORS IN CONCRETE SHALL BE TESTED IN ACCORDANCE WITH CBC SECTION 1910A.5.

5.03 POST-INSTALLED ANCHORS IN CONCRETE USED TO ATTACH BRACING WIRES SHALL BE TESTED AT A FREQUENCY OF 50 PERCENT IN ACCORDANCE WITH CBC SECTION 1910A.5.

6. LUMINARIES

6.01 ALL LUMINARIES SHALL BE POSITIVELY ATTACHED TO THE CEILING SUSPENSION SYSTEMS BY MECHANICAL MEANS TO RESIST A HORIZONTAL FORCE EQUAL TO THE WEIGHT OF THE LUMINARIES. A MINIMUM OF TWO SCREWS OR APPROVED FASTENERS ARE REQUIRED AT EACH LUMINARIES, PER ASTM E580 SECTION 5.3.1.

6.02 SURFACE-MOUNTED LUMINARIES SHALL BE ATTACHED TO THE MAIN RUNNER WITH AT LEAST TWO POSITIVE CLAMPING DEVICES. THE CLAMPING DEVICE SHALL COMPLETELY SURROUND THE SUPPORTING CEILING RUNNER AND BE MADE OF STEEL WITH A MINIMUM THICKNESS OF #14 GAUGE. ROTATIONAL SPRING CATCHES DO NOT COMPLY. A #12 GAUGE SLACK SAFETY WIRE SHALL BE CONNECTED FROM EACH CLAMPING DEVICE TO THE STRUCTURE ABOVE. PROVIDE ADDITIONAL SUPPORTS WHEN A LUMINARY IS 8 FEET OR LONGER OR EXCEEDS 56 POUNDS. MAXIMUM SPACING BETWEEN SUPPORTS SHALL NOT EXCEED 8 FEET.

6.03 LUMINARIES WEIGHING LESS THAN OR EQUAL TO 10 POUNDS MAY BE SUPPORTED DIRECTLY ON THE CEILING RUNNERS, SHALL HAVE A MINIMUM OF ONE #12 GAUGE SLACK SAFETY WIRE CONNECTED FROM THE FIXTURE HOUSING TO THE STRUCTURE ABOVE.

6.04 LUMINARIES WEIGHING GREATER THAN 10 POUNDS BUT LESS THAN OR EQUAL TO 56 POUNDS MAY BE SUPPORTED DIRECTLY ON THE CEILING RUNNERS, BUT THEY SHALL HAVE A MINIMUM OF TWO #12GAUGE SLACK SAFETY WIRES CONNECTED FROM THE FIXTURE HOUSING AT DIAGONAL CORNERS TO THE STRUCTURE ABOVE.

EXCEPTION: ALL LUMINARIES GREATER THAN TWO BY FOUR FEET WEIGHING LESS THAN 56 POUNDS SHALL HAVE A #12 GAUGE SLACK SAFETY WIRE AT EACH CORNER.

6.05 ALL LUMINARIES WEIGHING GREATER THAN 56 POUNDS SHALL BE INDEPENDENTLY SUPPORTED BY NOT LESS THAN FOUR TAUT #12 GAUGE HANGER WIRES (ONE AT EACH CORNER) ATTACHED FROM THE FIXTURE HOUSING TO THE STRUCTURE ABOVE OR OTHER APPROVED HANGERS. THE FOUR TAUT #12 GAUGE WIRES OR OTHER APPROVED HANGERS, INCLUDING THEIR ATTACHMENT TO THE STRUCTURE ABOVE, SHALL BE CAPABLE OF SUPPORTING FOUR TIMES THE WEIGHT OF THE FIXTURE.

7. SERVICES WITHIN THE CEILING

7.01 ALL FLEXIBLE SPRINKLER HOSE FITTING MOUNTING BRACKETS, CEILING-MOUNTED AIR TERMINALS OR OTHER SERVICES SHALL BE POSITIVELY ATTACHED TO THE CEILING SUSPENSION SYSTEMS BY MECHANICAL MEANS. SCREWS OR APPROVED FASTENERS ARE REQUIRED. A MINIMUM OF TWO ATTACHMENTS ARE REQUIRED AT EACH COMPONENT.

7.02 CEILING-MOUNTED AIR TERMINALS OR OTHER SERVICES WEIGHING LESS THAN OR EQUAL TO 20 POUNDS SHALL HAVE ONE #12 GAUGE SLACK SAFETY WIRE ATTACHED FROM THE TERMINAL OR SERVICE TO THE STRUCTURE ABOVE.

7.03 FLEXIBLE SPRINKLER HOSE FITTINGS, CEILING-MOUNTED AIR TERMINALS OR OTHER SERVICES WEIGHING MORE THAN 20 POUNDS BUT LESS THAN OR EQUAL TO 56 POUNDS SHALL HAVE TWO #12 GAUGE SLACK SAFETY WIRES (AT DIAGONAL CORNERS) CONNECTED FROM THE TERMINAL OR SERVICE TO THE STRUCTURE ABOVE.

7.04 FLEXIBLE SPRINKLER HOSE FITTINGS, CEILING-MOUNTED AIR TERMINALS OR OTHER SERVICES WEIGHING MORE THAN 56 POUNDS SHALL BE SUPPORTED DIRECTLY FROM THE STRUCTURE ABOVE BY NOT LESS THAN FOUR TAUT #12 GAUGE HANGER WIRES ATTACHED FROM THE TERMINAL OR SERVICE TO THE STRUCTURE ABOVE OR OTHER APPROVED HANGERS.

8. OTHER DEVICES WITHIN THE CEILING

8.01 ALL LIGHTWEIGHT MISCELLANEOUS DEVICES, SUCH AS STROBE LIGHTS, OCCUPANCY SENSORS, SPEAKERS, EXIT SIGNS, ETC., SHALL BE ATTACHED TO THE CEILING GRID. IN ADDITION, DEVICES WEIGHING MORE THAN10 POUNDS SHALL HAVE A #12 GAUGE SLACK SAFETY WIRE ANCHORED TO THE STRUCTURE ABOVE. DEVICES WEIGHING MORE THAN 20 POUNDS SHALL BE SUPPORTED INDEPENDENTLY FROM THE STRUCTURE ABOVE.

TABLE A - HEAVY DUTY GRID COMPONENTS

MANUFACTURER	MAIN TEE	H.D. 4' CROSS TEE	H.D. 2' CROSS TEE	RUNNER SPLICE DETAIL	SEISMIC WALL CLIPS	ICBO ER REPORT
DONN/USG	DX-26	DX-424	DX-216	5C/M1.4	BERC2	ICC-ESR-1222
ARMSTRONG	7301	XL7341	XL8320	5C/M1.4	BERC2	ICC-ESR-1308
CHICAGO/ROCKFON	200.01	1274.01	1202.01	5C/M1.4	BERC2	ICC-ESR-2631

NOTE: ALL GRID COMPONENTS SHALL BE BY THE SAME MANUFACTURER

METAL SUSPENSION SYSTEMS FOR LAY IN PANEL CEILING

IDENTIFICATION STAMP
DIV. OF THE STATE ARCHITECT
APP: 02-122533 INC:
REVIEWED FOR
SS ☑ FLS ☑ ACS ☑
DATE: 05/22/2024

American Modular Systems
787 Spreckels Ave., Manteca, CA 95336
Phone (209) 825-1921 Fax (209) 825-7018
www.americanmodular.com

INTELLECTUAL-PROPERTY & PROPRIETARY RIGHTS STATEMENT
COPYRIGHT © AMERICAN MODULAR SYSTEMS (AMS)
AMS OWNS ALL COPYRIGHT AND OTHER INTELLECTUAL-PROPERTY AND PROPRIETARY RIGHTS IN THESE DRAWINGS, SPECIFICATIONS, AND THE MATERIAL CONTAINED HEREIN. CERTAIN ELEMENTS SHOWN IN THESE DOCUMENTS ARE REGISTERED TRADEMARKS OF AMS. ALL PATENTABLE MATERIALS CONTAINED IN THESE DOCUMENTS AND ORIGINATING WITH AMS WILL REMAIN THE SOLE PROPERTY OF AMS. THESE DRAWING, SPECIFICATIONS, AND THE MATERIAL CONTAINED HEREIN MAY NOT BE REPRODUCED, TRANSMITTED, COPIED, DISTRIBUTED, MODIFIED, OR OTHERWISE DISPOSED OF (DIRECTLY OR INDIRECTLY) AND MAY NOT BE USED (IN WHOLE OR IN PART) TO ASSIST IN THE CONSTRUCTION, DESIGN, OR OTHER MAKING OF, OR FOR THE PURPOSE OF FURNISHING ANY INFORMATION FOR THE CONSTRUCTION, DESIGN, OR OTHER MAKING OF, ANY BUILDINGS (MODULAR OR OTHERWISE), DRAWINGS, SPECIFICATIONS, PRINTS, APPARATUS, OR PARTS THEREOF, EXCEPT AS EXPRESSLY PERMITTED BY WRITTEN CONSENT OF, OR IN A WRITTEN AGREEMENT WITH, AMS. SUBMITTAL OR DISTRIBUTION TO MEET OFFICIAL REGULATORY REQUIREMENTS WILL NOT BE CONSTRUED AS PUBLICATION IN DEROGATION OF AMS'S COPYRIGHT OR OTHER INTELLECTUAL-PROPERTY OR PROPRIETARY RIGHTS.

PRE-CHECKED SET NAME

30' x 32' THRU 60' x 32'

2GO®

SITE SPECIFIC PROJECT NAME

.
.
.

APPROVED
DIV. OF THE STATE ARCHITECT
APP: 04-122041 PC
REVIEWED FOR
SS ☑ FLS ☑ ACS ☑ CG ☑
DATE: 04/05/2024

☐ **2022 CBC PRE-CHECK (PC) DOCUMENT**
A SEPARATE PROJECT APPLICATION FOR CONSTRUCTION IS REQUIRED.

MANUFACTURER PROFESSIONAL OF RECORD ON PC

LICENSED ARCHITECT
RANDAL PATRICK CAVANAGH
No. C12631
Ren. 3-31-25
STATE OF CALIFORNIA

THESE DRAWINGS ARE PRELIMINARY AND NOT FOR CONSTRUCTION UNLESS STAMPED & SIGNED BY THE DESIGN PROFESSIONAL OF RECORD.

REVISIONS

△1	
△2	
△3	
△4	

DRAWN BY:	A.A.
SCALE:	AS NOTED
DATE:	DD/MM/YY
PROJECT NO:	XXXX-XX

SHEET TITLE:

CEILING NOTES
& SPECIFICATIONS

SHEET NUMBER:

M1.7

HEATING VENTILATING AND AIR CONDITIONING (HVAC)

1. HEAT PUMP: SINGLE PACKAGE WALL-MOUNTED AIR-TO-AIR ELECTRIC HEAT PUMP UNIT SHALL BE RATED IN ACCORDANCE WITH A.R.I. STANDARD 240-77. MAXIMUM AC SIZE FOR THIS BUILDING WILL BE A 5-TON UNIT. ALL UNITS SHALL BE 230/208 VOLT, 1 PHASE SYSTEM, UL TESTED & APPROVED OR COMPARABLE, AND MEET CURRENT ENERGY STANDARDS.

   A. THE SYSTEM SHALL MAINTAIN AN AUTOMATICALLY CONTROLLED INDOOR CLASSROOM TEMPERATURE OF 78 DEGREES F. WHEN THE OUTDOOR DRY BULB TEMPERATURE VARIES BETWEEN 100 DEGREES F. IN THE SUMMER
   B. THE SYSTEM MUST MAINTAIN THE ABOVE TEMPERATURE WHEN THE DAMPER IS ADJUSTED TO USE APPROXIMATELY ONE-THIRD FRESH AIR.

2. DUCTWORK

   A. CONSTRUCT ALL DUCTWORK OF GALVANIZED SHEET METAL IN ACCORDANCE WITH C.M.C., ASHRAE GUIDE EQUIPMENT VOLUME, AND SMACNA LOW VELOCITY DUCT CONSTRUCTION MANUAL, LATEST EDITIONS. ALL DUCTWORK SHALL BE INSULATED WITH 1" THICK FIBERGLASS DUCT WRAP WITH VAPOR BARRIER. PROVIDE 1" DUCT ATTENUATION AT ALL DUCTWORK WITHIN 2'-0" OF HVAC UNIT.

   B. NON-METALLIC DUCTWORK OPTION: IN ACCESSIBLE CONCEALED PORTIONS OF DUCT SYSTEM, RIGID 1" FIBERGLASS OR INSULATED FLEX-DUCT WITH VAPOR BARRIER MAY BE SUBSTITUTED FOR SHEET METAL DUCTWORK. ALL DUCTWORK WITHIN 2'-0" OF THE HVAC UNIT AND ALL INTERFACE CONNECTIONS SHALL BE METAL. DUCTWORK AND REINFORCEMENT SHALL BE DESIGNED FOR 2" STATIC PRESSURE. REFERENCE BRANDS: OWENS-CORNING FIBERGLASS DUCTBOARD, 1" THICK, AND MICRO-AIRE TYPE 475. NON-METALLIC DUCTWORK SHALL CONFORM TO NFPA 90-A AND SMACNA CLASS 1 RATING.
   C. DUCT INSTALLATION AND PLENUMS SHALL MEET THE REQUIREMENTS OF ENERGY CODE SECTION 120.4 AND THE MANUFACTURER'S INSTALLATION INSTRUCTIONS. (MINIMUM R=4.2) HORIZONTAL FLEX DUCT SHALL BE SUPPORTED AT A MAXIMUM 4' INTERVALS, WITH HANGING STRAPS A MINIMUM 1-1/2" WIDE. DUCTS MUST BE PULLED TIGHTS WITH A MAXIMUM SAG OF 1/2" PER FOOT OF HORIZONTAL RUN. DUCTS SHALL NOT BE KINKED OR CRUSHED. BEND/RADIUS EQUAL TO THE DUCT DIAMETER OR GREATER.
   D. SIZES OF SUPPLY AND RETURN DUCTS SHALL BE SPECIFIED ON PLANS. HVAC CURB SUPPLY AND RETURN DUCTS SHALL BE THE SAME SIZE AND ALLIGN WITH THE HVAC UNIT.
   E. FLEXIBLE AIR DUCTS AND CONNECTORS SHALL BE NOT MORE THAN 5 FEET IN LENGTH AND SHALL NOT BE USED IN LIEU OF RIGID ELBOWS OR FITTINGS. FLEXIBLE AIR DUCTS SHALL BE PERMITTED TO BE USED AS AN ELBOW AT A TERMINAL DEVICE PER ENERGY CODE 120.4 AND CMC 603.4.1

3. AIR DUCT INSULATION AND LININGS SHALL COMPLY WITH FLAME SPREAD LESS THAN OR EQUAL TO 25, SMOKE GENERATION LESS THAN OR EQUAL TO 50.

4. SUPPLY AIR DIFFUSERS SHALL BE 675 CFM MAXIMUM, 12" ROUND. 1" FIBERGLASS OR FLEXDUCT DUCTWORK SPECIFICALLY DESIGNED TO PROVIDE AIR THERMAL COOLING SYSTEMS. 24"X8"X1" MICRO-AIRE TYPE #475 OWENS-CORNING, KNAUF, CERTAINTEED, OR EQUAL AND 90-B: UL #131 TEST, CLASS 1 RATING WITH "SMACNA".

5. REGISTERS AND DIFFUSERS: PROVIDE THREE (MINIMUM) 4-WAY THROW AIR DIFFUSERS AS MANUFACTURED BY CARNES, TITUS, HART AND COOLEY, METALAIRE, SHOEMAKER, BARBER-COLEMAN OR KRUEGER COMMERCIAL GRADE GRILLS AND REGISTERS.

6. AIR CONDITIONING CONTROLS: PROVIDE ELECTRONIC PROGRAMMABLE THERMOSTAT. THERMOSTAT SHALL BE PROGRAMMED WITH EXPECTED OCCUPIED TIMERS. AIR HANDLER FAN WILL BE PROGRAMMED TO RUN DURING ALL OCCUPIED TIMES. PRE-OCCUPANCY PURGE SHALL BE PROGRAMMED ONE HOUR PRIOR TO THE MODULAR BUILDING BEING NORMALLY OCCUPIED.
   THERMOSTAT SHALL HAVE THE FOLLOWING FUNCTIONS:
   C. 5 AND 2 WEEKDAY/WEEKEND PROGRAMMING DAYS WITH 4 SEPARATE TIME/TEMPERATURE SETTINGS FOR A 24-HOUR PERIOD.
   D. KEY BOARD LOCKOUT SWITCH.
   E. PROGRAMMABLE DISPLAY.
   F. 2-HOUR OVERRIDE MINIMUM.
   G. STATUS INDICATED LED'S.
   H. BATTERY BACK-UP.
   I. PROVIDE LOCKING CLEAR THERMOSTAT COVER WITH THERMOSTAT COVER WITH ACCESS HOLE FOR PROGRAM OVERRIDE. WHITE RODGERS IF92-371. MOUNT TOP OF BOX @ 48" A.F.F. MAX.
   (WHERE SEALED, SETTINGS & ADJUSTMENTS CAN BE DONE BY SERVICE PERSONNEL ONLY.)

7. THERMAL INSULATION
   A. REFER TO INSULATION TABLES IN SHEET M1.7
   B. FLAME SPREAD AND SMOKE DEVELOPMENT SHALL CONFORM TO CALIFORNIA BUILDING CODE SEC. 720.
   C. BURNING CHARACTERISTICS: FLAME SPREAD LESS THAN 25 & SMOKE DEVELOPMENT IS LESS THAN 50

8. FACTORY-MADE AIR DUCTS
   A. FACTORY-MADE AIR DUCTS SHALL BE APPROVED FOR THE USE INTENDED OR SHALL CONFORM TO THE REQUIREMENTS OF C.M.C. SECTION 601.0.
   B. EACH PORTION OF A FACTORY-MADE AIR DUCT SYSTEM SHALL BE IDENTIFIED BY THE MANUFACTURER WITH A LABEL OR OTHER SUITABLE IDENTIFICATION INDICATING COMPLIANCE WITH C.M.C. SECTION 601.0 AND ITS CLASS DESIGNATION. THESE DUCTS SHALL BE LISTED AND SHALL BE INSTALLED IN ACCORDANCE WITH THE TERMS OF THEIR LISTING AND THE REQUIREMENTS OF C.M.C. SECTION 601.0.
   C. DUCT SUPPORT FLEX DUCT TO BE SUPPORTED WITH 1-1/2" WIDE X26 GA. GALV. STRAP @ MAX 4'-0" O.C. ATTACH TO RAFTER WITH TWO #8 S.M.S. @ EACH END.
   D. SUPPLY AIR PLENUM TO BE SUPPORTED WITH 1-1/2" WIDE X26 GA. GALV. STRAPS MINIMUM 2 PER PLENUM.
   E. SUPPLY AIR BOX AND DIFFUSERS TO BE SUPPORTED WITH (2) 12 GA. HANGER WIRES TO BOX @ OPPOSITE CORNERS.
   F. SUPPLY AIR BOX AND DIFFUSERS TO BE BRACED WITH (2) 12 GA. SLACK WIRES TO BOX @ OPPOSITE CORNERS. ATTACH SUPPLY AIR DIFFUSERS TO CEILING GRID TO RESIST A LATERAL LOAD EQUAL TO THE WEIGHT OF THE DIFFUSER AND SUPPLY AIR BOX WITH TWO #8 S.M.S.

9. FIREBLOCKING SHALL BE PROVIDED IN THE FOLLOWING LOCATIONS:
   A. IN CONCEALED SPACES OF STUD WALLS AND PARTITIONS, INCLUDING FURRED SPACES;
   B. AT THE CEILING AND FLOOR LEVELS;
   C. AND AT 10-FOOT (3048MM) INTERVALS BOTH VERTICAL AND HORIZONTAL.
   REFERENCE 2022 CBC SECTION 718.

10. THE INTERIOR ENVIRONMENT SHALL BE ASSEMBLED WITH PRODUCTS THAT CONTRIBUTE TO A HEALTHY INDOOR AIR QUALITY (IAQ). THE FOLLOWING SHALL COMPLY TITLE 24, PART 11 ("CAL-GREEN"), SECTION 5.504.4.
    (SEE SHEET N1.0, SECTION 9C "INTERIOR AIR QUALITY CONTROL")

11. HVAC FILTER
    A. FILTERS SHALL HAVE A "MINIMUM EFFICIENCY REPORTING VALUE" OF 13 WITH 2" DEPTH MIN. (MERV 13) AND SHALL BE INSTALLED PRIOR TO OCCUPANCY AND RECOMMENDATIONS FOR MAINTENANCE WITH FILTERS OF THE SAME VALUE SHALL BE INCLUDED IN THE OPERATION AND MAINTENANCE MANUAL, PER 2022 CALIFORNIA GREEN BUILDING STANDARDS PART 11, SECTION - 5.504.5.3
    D. INSTALLED FILTERS SHALL BE CLEARLY LABELED BY THE MANUFACTURER INCLUDING THE MERV RATING, PER 2022 CALIFORNIA GREEN BUILDING STANDARDS PART 11, SECTION - 5.504.5.3.1

10. ROOF MOUNTED HVAC
    A. A GASKET SHALL BE PLACED BETWEEN THE CURB AND THE HVAC UNIT. MASTIC SEALANT SHALL BE USED TO SEAL ALL SEAMS BETWEEN THE HVAC UNIT AND DUCTS.

13. HVAC CONTROLS
    A. THERMOSTAT (BY OTHERS) WILL BE PROGRAMMED WHEN THE MODULAR BUILDING IS PLACED ON A SITE TO ENSURE THE MINIMUM AIR RATE WILL BE SUPPLIED TO THE SPACE AT ALL USUALLY OCCUPIED TIMES AND PROGRAMMED TO PROVIDE A PRE-OCCUPANCY PURGE ONE HOUR PRIOR TO THE MODULAR BUILDING BEING NORMALLY OCCUPIED PER ENERGY CODE 120.1(C)1.

14. UPON SITE PLACEMENT OR SITE CONSTRUCTION, THE OPERATION AND MAINTENANCE DOCUMENTATION FOR ALL MECHANICAL AND LIGHTING SYSTEMS AND CONTROLS SHALL BE PROVIDED BY THE GENERAL CONTRACTOR FOR THE PERMANENT MODULAR RELOCATABLE BUILDING AND DELIVERED TO THE OWNER.

HEATING VENTILATING AND AIR CONDITIONING (HVAC) continue

15. THE CALIFORNIA ENERGY CODE 10-103 REQUIRES ACCEPTANCE TESTING ON ALL NEWLY INSTALLED LIGHTING CONTROLS, MECHANICAL SYSTEMS, ENVELOPES, AND PROCESS EQUIPMENT AFTER INSTALLATION AND BEFORE PROJECT COMPLETION. AN ACCEPTANCE TEST IS FUNCTIONAL PERFORMANCE TEST TO HELP ENSURE THAT NEWLY INSTALLED EQUIPMENT IS OPERATING AND IN COMPLIANCE WITH THE ENERGY CODE.

16. LIGHTING CONTROLS ACCEPTANCE TESTS MUST BE PERFORMED BY A CERTIFIED LIGHTING CONTROL ACCEPTANCE TEST TECHNICIAN (ATT). MECHANICAL SYSTEM ACCEPTANCE TESTS MUST BE PERFORMED BY CERTIFIED MECHANICAL ATT FOR PROJECTS SUBMITTED ON OR AFTER OCTOBER 1, 2021. ENVELOPE AND PROCESS EQUIPMENT ACCEPTANCE TESTS SHALL BE PERFORMED BY THE INSTALLING CONTRACTOR, ENGINEER/ARCHITECT OF RECORD OR THE OWNER'S AGENT.

17. A LISTING OF CERTIFIED ATT'S CAN BE FOUND AT:
    HTTPS://WWW.ENERGY.CA.GOV/PROGRAMS-AND-TOPICS/PROGRAMS/ACCEPTANCE-TEST-TECHNICIAN-CERTIFICATION-PROVIDER-PROGRAM/ACCEPTANCE.
    THE ACCEPTANCE TESTING PROCEDURES MUST BE REPEATED, AND DEFICIENCIES MUST BE CORRECTED BY THE BUILDER OR INSTALLING CONTRACTOR UNTIL THE CONSTRUCTION/INSTALLATION OF PROJECT INSPECTORS WILL BE COLLECTING THE FORMS TO CONFIRM THAT THE REQUIRED ACCEPTANCE TESTS HAVE BEEN COMPLETED.

18. THERMOSTAT SHALL BE PROGRAMMED TO PREVENT SUPPLEMENTARY HEATER OPERATION WHEN THE HEATING LOAD CAN BE MET BY THE HEAT PUMP ALONE. THE CUT-ON TEMPERATURE FOR COMPRESSION HEATING MUST BE HIGHER THAN THE CUT-ON TEMPERATURE FOR SUPPLEMENTARY HEATING, AND THE CUT-OFF TEMPERATURE FOR COMPRESSION HEATING MUST BE HIGHER THAN THE CUT-OFF TEMPERATURE FOR SUPPLEMENTARY HEATING PER CEC 2019 SECTION 110.2(B).

HVAC NOTES

HVAC CFM CHART

	MODEL #	DESCRIPTION	MAX. CFM	UNIT WEIGHT (LBS)	EER
BARD WALL HUNG	W42HC	3½ TON HEAT PUMP	1350	500	11
	W48HC	4 TON HEAT PUMP	1550	505	11
SYSTEMAIR INDOOR	CAH-3	4 TON HEAT PUMP	1600	948	11
	CAH-5	5 TON HEAT PUMP	1800	948	11

THE CALIFORNIA ENERGY CODE SECTION 10-103 REQUIRES ACCEPTANCE TESTING ON ALL NEWLY INSTALLED LIGHTING CONTROLS, MECHANICAL SYSTEMS, ENVELOPES, AND PROCESS EQUIPMENT AFTER INSTALLATION AND BEFORE PROJECT COMPLETION. AN ACCEPTANCE TEST IS A FUNCTIONAL PERFORMANCE TEST TO HELP ENSURE THAT NEWLY INSTALLED EQUIPMENT IS OPERATING AND IN COMPLIANCE WITH ENERGY CODE.

LIGHTING CONTROLS ACCEPTANCE TESTS MUST BE PERFORMANCE BY A CERTIFIED LIGHTING CONTROLS ACCEPTANCE TEST TECHNICIAN (ATT).

MECHANICAL SYSTEM ACCEPTANCE TESTS MUST BE PERFORMED BY A CERTIFIED MECHANICAL ATT FOR PROJECTS SUBMITTED ON OR AFTER OCTOBER 1, 2021.
ENVELOPE AND PROCESS EQUIPMENT ACCEPTANCE TESTS SHALL BE PERFORMED BY THE INSTALLING CONTRACTOR, ENGINEER/ARCHITECT OF RECORD OR THE OWNER'S AGENT.

A LIST OF CERTIFIED ATT'S CAN BE FOUND AT:
HTTP://WWW.ENERGY.CA.GOV/PROGRAMS-AND-TOPICS/PROGRAMS/ACCEPTANCE-TEST-TECHNICIAN-CERTIFICATION-PROVIDER-PROGRAM/ACCEPTANCE

THE ACCEPTANCE TESTING PROCEDURES MUST BE REPEATED, AND DEFICIENCIES MUST BE CORRECTED BY THE BUILDER OR INSTALLING CONTRACTOR UNTIL THE CONSTRUCTION/INSTALLATION OF THE SPECIFIED SYSTEMS CONFORM AND PASS THE REQUIRED ACCEPTANCE CRITERIA. PROJECT INSPECTORS WILL BE COLLECTING THE FORMS TO CONFIRM THAT THE REQUIRED ACCEPTANCE TESTS HAVE BEEN COMPLETED.

H2 FAN SYSTEMS

BUILDING SIZE	DESIGN OA
	CFM
30'x32'	365
40'x32'	486
50'x32'	304
60'x32'	365

MINIMUM INSULATION SCHEDULE

ZONE GROUP (ZONE)	WALL	ROOF		FLOORS
		BATTS	RIGID	
GROUP A (1,16)	R-13	R-19	R-15	R-13
GROUP B (2-5)	R-13	R-19	R-5	R-13
GROUP C (6-13)	R-13	R-19	R-5	R-13
GROUP D (14,15)	R-13	R-19	R-5	R-13

ADDITIONAL HVAC NOTES:
MANUAL OVERRIDE CONTROLS ARE A MANDATORY MEASURE UNDER ENERGY CODE SECTION 120.2(e). ALL HVAC SYSTEMS SHALL HAVE A MANUAL OVERRIDE ACCESSIBLE TO THE OCCUPANTS THAT ALLOWS THEM TO TURN ON THE HVAC SYSTEM DURING NORMAL UNOCCUPIED TIMES. THIS CAN BE A MANUAL OVERRIDE FOR UP TO 4 HOURS, OCCUPANCY SENSOR, OR A 4 HOUR MANUALLY OPERATED TIMER.

HVAC SCHEDULES

IDENTIFICATION STAMP
DIV. OF THE STATE ARCHITECT
APP: 02-122533 INC:
REVIEWED FOR
SS ☑ FLS ☑ ACS ☑
DATE: 05/22/2024

American Modular Systems
787 Spreckels Ave., Manteca, CA 95336
Phone (209) 825-1921 Fax (209) 825-7018
www.americanmodular.com

INTELLECTUAL-PROPERTY & PROPRIETARY RIGHTS STATEMENT
COPYRIGHT © AMERICAN MODULAR SYSTEMS (AMS)
AMS OWNS ALL COPYRIGHT AND OTHER INTELLECTUAL-PROPERTY AND PROPRIETARY RIGHTS IN THESE DRAWINGS, SPECIFICATIONS, AND THE MATERIAL CONTAINED HEREIN. CERTAIN ELEMENTS SHOWN IN THESE DOCUMENTS ARE REGISTERED TRADEMARKS OF AMS. ALL PATENTABLE MATERIALS CONTAINED IN THESE DOCUMENTS AND ORIGINATING WITH AMS WILL REMAIN THE SOLE PROPERTY OF AMS. THESE DRAWING, SPECIFICATIONS, AND THE MATERIAL CONTAINED HEREIN MAY NOT BE REPRODUCED, TRANSMITTED, COPIED, DISTRIBUTED, MODIFIED, OR OTHERWISE DISPOSED OF (DIRECTLY OR INDIRECTLY) AND MAY NOT BE USED (IN WHOLE OR IN PART) TO ASSIST IN THE CONSTRUCTION, DESIGN, OR OTHER MAKING OF, OR FOR THE PURPOSE OF FURNISHING ANY INFORMATION FOR THE CONSTRUCTION, DESIGN, OR OTHER MAKING OF, ANY BUILDINGS (MODULAR OR OTHERWISE), DRAWINGS, SPECIFICATIONS, PRINTS, APPARATUS, OR PARTS THEREOF, EXCEPT AS EXPRESSLY PERMITTED BY WRITTEN CONSENT OF, OR IN A WRITTEN AGREEMENT WITH, AMS. SUBMITTAL OR DISTRIBUTION TO MEET OFFICIAL REGULATORY REQUIREMENTS WILL NOT BE CONSTRUED AS PUBLICATION IN DEROGATION OF AMS'S COPYRIGHT OR OTHER INTELLECTUAL-PROPERTY OR PROPRIETARY RIGHTS.

PRE-CHECKED SET NAME
30' x 32' THRU 60' x 32'
2GO®

SITE SPECIFIC PROJECT NAME
.
.
.

APPROVED
DIV. OF THE STATE ARCHITECT
APP: 04-122041 PC
REVIEWED FOR
SS ☑ FLS ☑ ACS ☑ CG ☑
DATE: 04/05/2024

☐ 2022 CBC PRE-CHECK (PC) DOCUMENT
A SEPARATE PROJECT APPLICATION FOR CONSTRUCTION IS REQUIRED.

MANUFACTURER PROFESSIONAL OF RECORD ON PC

LICENSED ARCHITECT
RANDAL PATRICK CAVANAGH
No. C12631
Ren. 3-31-25
STATE OF CALIFORNIA

THESE DRAWINGS ARE PRELIMINARY AND NOT FOR CONSTRUCTION UNLESS STAMPED & SIGNED BY THE DESIGN PROFESSIONAL OF RECORD.

REVISIONS
1
2
3
4

DRAWN BY:	A.A.
SCALE:	AS NOTED
DATE:	DD/MM/YY
PROJECT NO:	XXXX-XX

SHEET TITLE:
MECHANICAL NOTES
& SCHEDULES

SHEET NUMBER:
M1.7A

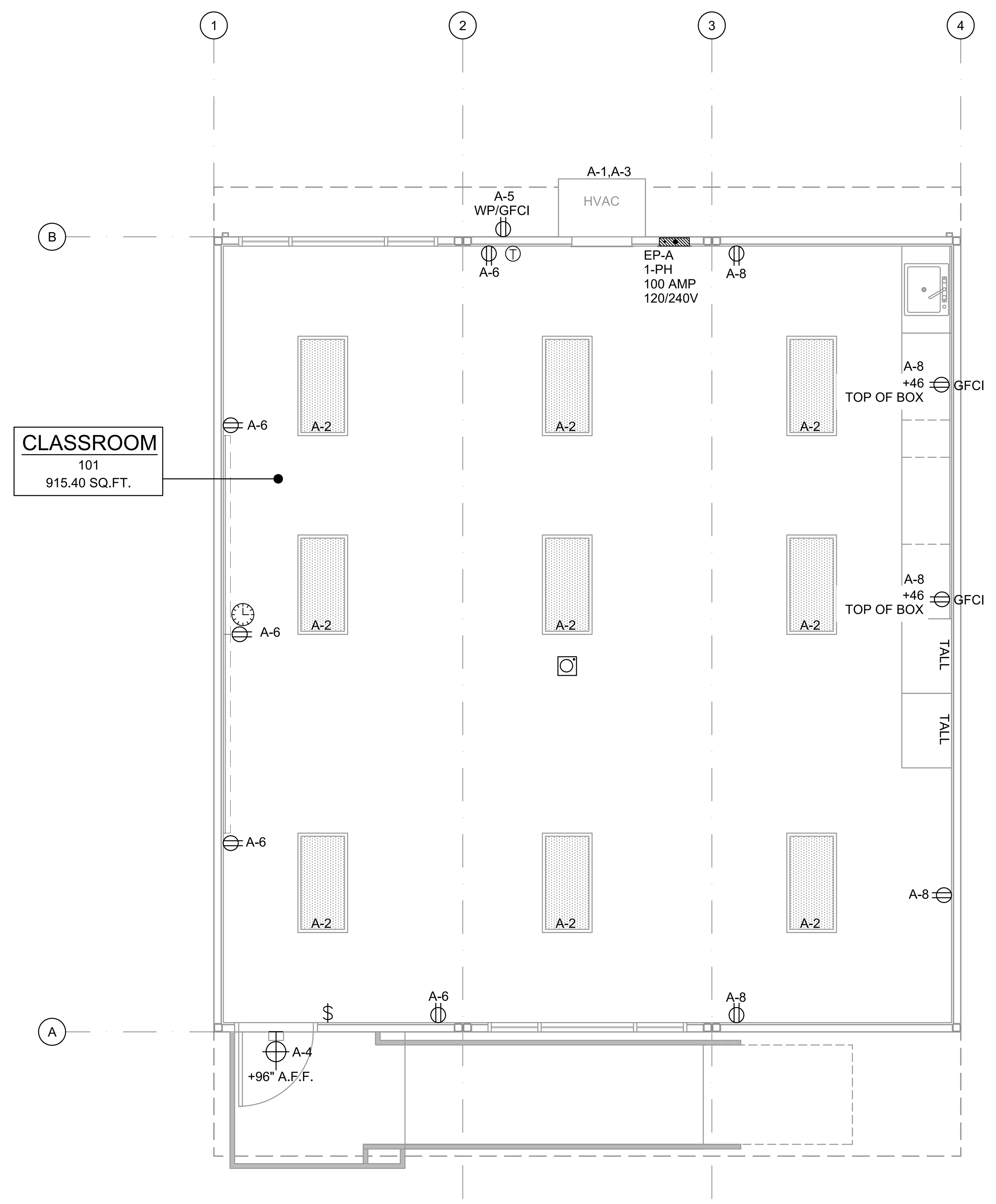

TYPICAL ELECTRICAL PLAN

SCALE: 1/4" = 1' - 0" | 1

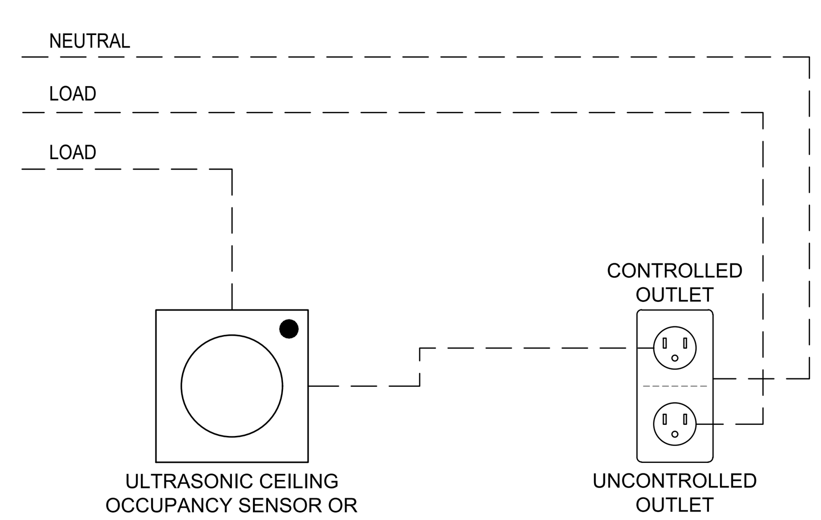

NOTE:
REQUIRED FOR OFFICES, LOBBY, AND MEETING ROOMS ONLY.

TYP. CONTROLLED/UNCONTROLLED RECEPTACLE WIRING DIAGRAM

SCALE: 1/4" = 1' - 0" | 2

1. AUTOMATIC DAYLIGHTING CONTROLS:
NOT REQUIRED IN ROOMS WHERE COMBINED INSTALLED LIGHTING POWER IN COMBINED SKYLIT & PRIMARY DAYLIT ZONES ARE <120 WATTS. INSTALLED WATTAGE IN PRIMARY SIDELIT DAY LIT ZONE IS 90 WATTS (2x 45w, AS SHOWN IN THE SHADED AREAS). THEREFORE, AUTOMATIC DAYLIGHTING CONTROLS ARE ONLY REQUIRED WHEN "SOLATUBES" ARE INSTALLED. SEE A1.1. WHEN DAYLIT CONTROLS ARE REQUIRED, PROVIDE COMBINATION OCCUPANCY/PHOTOCELL SENSOR.
2. ENERGY MANAGEMENT CONTROL SYSTEM (EMCS) CONNECTION:
PER TITLE 24 CODE, "AN EMCS MAY BE INSTALLED TO COMPLY WITH THE REQUIREMENTS OF ONE OR MORE LIGHTING CONTROLS IF IT MEETS THE MINIMUM REQUIREMENTS". PC MAY CONTAIN OCCUPANCY SENSORS AND PHOTOCELL CONTROL LIGHTING, IN THAT CASE, AN EMCS IS NOT REQUIRED FOR THIS PC.
3. SOLAR-READY ZONE REQUIREMENTS:
REQUIREMENTS & TABLE CAN BE FOUND ON SHEET A2.0
4. SUGGESTED CONTROLS DIAGRAM FOR TYPICAL DAYLIT ZONE:

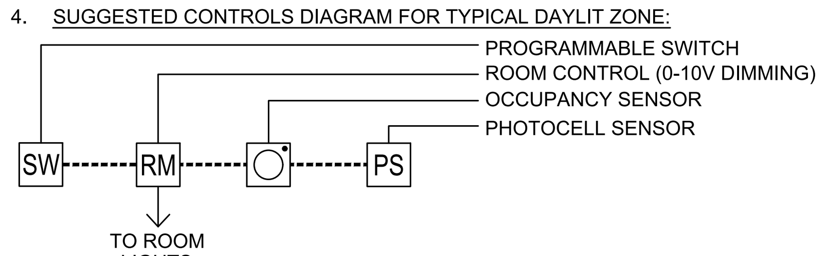

NOTE: ANT MONITORING EQUIPMENT OR ASSOCIATED SENSORS ARE SITE SPECIFIC AND ARE NOT INCLUDED IN THE BASE PC.

TYP. CONTROLLED/UNCONTROLLED RECEPTACLE ENERGY NOTES

N.T.S. | 3

GENERAL NOTES

1. THE PROJECT ARCHITECT SHALL BE RESPONSIBLE FOR THE PLACEMENT OF HEAT & SMOKE DETECTORS, EVACS AND PULL STATIONS, AND COMPLETE FIRE ALARM SYSTEM WHEN THE SITE SPECIFIC PROJECT IS REQUIRED TO MEET THE PROVISIONS OF SB 575 & CBC 907.2.3.
2. ANY MONITORING EQUIPMENT OR ASSOCIATED SENSORS ARE SITE SPECIFIC AND ARE NOT INCLUDED IN THIS BASE PC.
3. PULL STATIONS ARE REQUIRED AT EVERY EXIT. PROVIDE EXIT SIGNS (CBC 1013) AND EMERGENCY EXIT ILLUMINATION (CBC 1008).
4. SEE PLANS FOR LOCATIONS OF ALL DEVICES.
5. STUB-OUT LOCATIONS FOR ELECTRICAL PANEL, FIRE ALARM, AND DATA BOXES ARE SHOWN DIAGRAMMATICAL ONLY. EXACT LOCATIONS MAY VARY +/- SEVERAL FEET. PLEASE CONTACT AMERICAN MODULAR SYSTEMS FOR EXACT LOCATIONS. POINT OF CONNECTION WILL BE AT FACE OF BUILDING.
6. STUB-UP ALL FIRE ALARM JUNCTION BOXES TO ACCESSIBLE ATTIC SPACE WITH 1/2" MIN. GALV. THIN WALL TUBING (EMT). DO NOT CONNECT FIRE ALARM CONDUIT WITH ANY OTHER ELECTRICAL CONDUIT.
7. THE LIGHTS FOR EACH ROOM OVER 250 SQ FT SHALL BE CONTROLLED BY ULTRASONIC OCCUPANCY SENSOR: WATT STOPPER W-500A, W-1000A, OR W-2000A (OR EQUAL) BASED ON THE ROOM SIZE, IN CONJUNCTION WITH BI-LEVEL SWITCHING.
8. FIXTURE MOUNTING SHALL COMPLY WITH CALIFORNIA SEISMIC REGULATIONS.
9. LIGHTING FIXTURES MAY BE INSTALLED ROTATED 90° FROM SHOWN TO MATCH T-BAR GRID LAYOUT.

DEMAND RESPONSE CONTROLS

1. DEMAND RESPONSE CONTROLS ARE REQUIRED IN BUILDINGS LARGER THAN 10,000 S.F.
2. DEMAND RESPONSE CONTROLS, WHERE REQUIRED, ARE TO BE PROVIDED BY OTHERS.
3. DEMAND RESPONSE CONTROLS AND EQUIPMENT SHALL BE CAPABLE OF RECEIVING AND AUTOMATICALLY RESPONDING TO AT LEAST ONE STANDARD-BASED MESSAGING PROTOCOL WHICH ENABLES DEMAND RESPONSE AFTER RECEIVING A DEMAND SIGNAL.
4. SITE-SPECIFIC PROJECTS WHICH REQUIRE DEMAND RESPONSE CONTROLS MUST INCLUDE THE SUBMITTAL OF FORM NRCC-ELC-O1-E TO DSA (BY OTHERS).

ELECTRICAL SYMBOLS

- ELECTRICAL PANEL - MOUNT FLUSH WITH WALL FINISH, U.O.N.
- INCANDESCENT WALL MOUNTED INTERIOR LIGHT FIXTURE MODEL: LEVITON 9850-LED, 10W MAX
- EXTERIOR LIGHT FIXTURE @ EACH DOOR, LED OR EQUAL (MAX 40W) - WHERE THERE ARE TWO OR MORE EXITS, A MINIMUM 90 MIN. BATTERY BACK-UP IS REQUIRED
- EXTERIOR SOFFIT MOUNTED LIGHT FIXTURE ENERTRON MODEL 110BSH2X7LED-50 LOW PROFILE CANOPY, LED OR EQUAL (MAX 16W)
- UNCONTROLLED-DUPLEX WALL CONVENIENCE OUTLET - MOUNT @ +18" A.F.F. TO CENTERLINE, U.O.N.
- CONTROLLED-DUPLEX WALL CONVENIENCE OUTLET - MOUNT @ +18" A.F.F. TO CENTERLINE, U.O.N. - TO BE CONTROLLED BY OCCUPANCY SENSOR.
- COMBO-DUPLEX WALL CONVENIENCE OUTLET - MOUNT @ +18" A.F.F. TO CENTERLINE, U.O.N.
- FOURPLEX WALL OUTLET - MOUNT @ +18" A.F.F. TO CENTER LINE - U.O.N.
- WP/GFCI — WEATHER-PROOF GROUND FAULT CIRCUIT INTERRUPT OUTLET - MOUNT @ 18" A.F.F. TO CENTERLINE - U.O.N.
- GFCI — GROUND FAULT CIRCUIT INTERRUPT OUTLET - MOUNT @ 18" A.F.F. TO CENTERLINE - U.O.N.
- $ — CONTROLLED-SINGLE POLE LIGHT SWITCHES - MOUNT @ +48" A.F.F. MAX TO TOP OF BOX - HUBBELL PREMIUM, BRYANT HEAVY DUTY, OR LEVITON SPECIFICATIONS GRADE.
- $S — SINGLE POLE SOLA-TUBE SWITCH - MOUNT @ +48" A.F.F. MAX TO TOP OF BOX.
- $T — SPRING WOUND COUNTDOWN TIMER, 125-277 VAC, 50/60 Hz, DSPT, 60 MINUTE MAX, ITEM FD460MW OR EQUAL. - MOUNT @ +48" A.F.F. MAX TO TOP OF BOX.
- a — SWITCH SUBSCRIPTS - a=DEVICE CONTROLLED.
- T — THERMOSTAT - TOP OF BOX MOUNTED @ +48" A.F.F.
- J — JUNCTION BOX - SIZE / LOCATION A.F.F. / TYPE AS NOTED
- J — ELECTRICAL CROSSOVER - J-BOX - ABOVE CEILING - #1- 4"x1", #22- 4"x2"
- CLOCK/SPEAKER COMBO - MOUNT @ +90" A.F.F. TO CENTERLINE - U.O.N. - DEVICE BY OTHERS
- S — SPEAKER - OUTLET ONLY - 4" SQ. BOX WITH SINGLE DEVICE RING AND COVER - MOUNT @ +84" A.F.F. TO CENTERLINE - DEVICE BY OTHERS
- DATA/COMMUNICATION - OUTLET ONLY - 4" SQ BOX WITH SINGLE DEVICE RING AND COVER - MOUNT @ +18" A.F.F. TO CENTERLINE, U.O.N., AND PROVIDE A 3/4" CONDUIT STUBBED ABOVE CEILING - DEVICE BY OTHERS
- CATV — CATV OUTLET - OUTLET ONLY - PROVIDE (1) 4" SQ. BOX WITH SINGLE DEVICE RING AND COVER - (1) 3/4" DIA CONDUIT - STUBBED ABOVE CEILING - DEVICES BY OTHERS
- INTERCOM/TELEPHONE - OUTLET ONLY - 4" SQ. BOX WITH SINGLE DEVICE RING AND COVER - MOUNT TOP OF BOX @ +48" A.F.F. U.O.N. AND PROVIDE A 3/4" CONDUIT STUBBED ABOVE CEILING - DEVICE BY OTHERS
- S — SECURITY/INTRUSION KEY PAD - OUTLET ONLY - 4" SQ. BOX w/ SINGLE DEVICE RING AND COVER, MOUNT TOP OF BOX @ +48" A.F.F., AND ONE 3/4" CONDUIT STUBBED ABOVE CEILING - DEVICE BY OTHERS
- DC — DOOR CONTACT - PROVIDE (1) EMPTY 1/2" DIA EMT THROUGH DOOR HEADER - STUBBED ABOVE CEILING - DEVICE BY OTHERS
- M — MOTION SENSOR OUTLET - PROVIDE (1) 4" SQ. BOX WITH SINGLE DEVICE RING AND COVER AND ONE 3/4" CONDUIT STUBBED ABOVE CEILING
- ULTRASONIC OCCUPANCY SENSOR - MOUNTED TO FINISH CEILING
- F — FIRE ALARM PULL STATION - OUTLET ONLY - PROVIDE (1) 4" SQ. BOX WITH SINGLE DEVICE RING AND COVER - TOP OF OPERATING HANDLE MOUNTED BETWEEN +42" TO +48" A.F.F. - DEVICE BY OTHERS
- FIRE ALARM HORN - OUTLET ONLY - 4" SQ. SINGLE GANG J-BOX WITH BLANK WEATHERPROOF COVER - MOUNTED +90" A.F.F. TO CENTERLINE - DEVICE BY OTHERS
- M — MINI HORN BOX - OUTLET ONLY - SINGLE DEVICE RING AND COVER - MOUNTED +80" A.F.F. TO CENTERLINE BUT NO GREATER THAN +96" - DEVICE BY OTHERS
- VISUAL FIRE ALARM ALARM - OUTLET ONLY - 4" SQ. BOX WITH SINGLE DEVICE RING AND COVER - MOUNT SO THAT LENS IS BETWEEN 80"-96" A.F.F. (CEILING MOUNT PER NFPA72 TABLE 6-4.4.1(b)) DEVICE BY OTHERS.
- 2'x4' LED EDGE FIT FIXTURE, MODEL: LSI, SFP24 5601K LUMENS - 45 WATTS MAX OR EQUAL
- 2'x2' LED EDGE FIT FIXTURE, MODEL: LSI, SFP22 3163K LUMENS - 30 WATTS MAX OR EQUAL
- 24 HOUR EMERGENCY LIGHTING WITH MINIMUM 90-MINUTE BATTERY BACK-UP - WHERE TWO OR MORE EXITS ARE REQUIRED
- E — EMERGENCY EXIT LIGHT, - WHERE THERE ARE TWO OR MORE EXITS, AN EXIT SIGN WITH INTEGRAL EMERGENCY LIGHTING W/MINIMUM 90-MINUTE BATTERY BACK-UP IS REQUIRED.
- EXTERIOR SOFFIT MOUNTED LIGHTING PER MODEL ABOVE WITH EMERGENCY 90 MIN. MINIMUM BATTERY BACK-UP, PROVIDE (1) BY THE STAIR LANDINGS.

IDENTIFICATION STAMP
DIV. OF THE STATE ARCHITECT
APP: 02-122533 INC:
REVIEWED FOR
SS ☑ FLS ☑ ACS ☑
DATE: 05/22/2024

American Modular Systems
787 Spreckels Ave., Manteca, CA 95336
Phone (209) 825-1921 Fax (209) 825-7018
www.americanmodular.com

INTELLECTUAL-PROPERTY & PROPRIETARY RIGHTS STATEMENT
COPYRIGHT © AMERICAN MODULAR SYSTEMS (AMS)
AMS OWNS ALL COPYRIGHT AND OTHER INTELLECTUAL-PROPERTY AND PROPRIETARY RIGHTS IN THESE DRAWINGS, SPECIFICATIONS, AND THE MATERIAL CONTAINED HEREIN. CERTAIN ELEMENTS SHOWN IN THESE DOCUMENTS ARE REGISTERED TRADEMARKS OF AMS. ALL PATENTABLE MATERIALS CONTAINED IN THESE DOCUMENTS AND ORIGINATING WITH AMS WILL REMAIN THE SOLE PROPERTY OF AMS. THESE DRAWING, SPECIFICATIONS, AND THE MATERIAL CONTAINED HEREIN MAY NOT BE REPRODUCED, TRANSMITTED, COPIED, DISTRIBUTED, MODIFIED, OR OTHERWISE DISPOSED OF (DIRECTLY OR INDIRECTLY) AND MAY NOT BE USED (IN WHOLE OR IN PART) TO ASSIST IN THE CONSTRUCTION, DESIGN, OR OTHER MAKING OF, OR FOR THE PURPOSE OF FURNISHING ANY INFORMATION FOR THE CONSTRUCTION, DESIGN, OR OTHER MAKING OF, ANY BUILDINGS (MODULAR OR OTHERWISE), DRAWINGS, SPECIFICATIONS, PRINTS, APPARATUS, OR PARTS THEREOF, EXCEPT AS EXPRESSLY PERMITTED BY WRITTEN CONSENT OF, OR IN A WRITTEN AGREEMENT WITH, AMS. SUBMITTAL OR DISTRIBUTION TO MEET OFFICIAL REGULATORY REQUIREMENTS WILL NOT BE CONSTRUED AS PUBLICATION IN DEROGATION OF AMS'S COPYRIGHT OR OTHER INTELLECTUAL-PROPERTY OR PROPRIETARY RIGHTS.

PRE-CHECKED SET NAME
30' x 32' THRU 60' x 32'
2GO®

SITE SPECIFIC PROJECT NAME
GALT JOINT UESD
VERNON GREER ES
(2) 30'X32' BUILDINGS

MANUFACTURER PROFESSIONAL OF RECORD ON PC

THESE DRAWINGS ARE PRELIMINARY AND NOT FOR CONSTRUCTION UNLESS STAMPED & SIGNED BY THE DESIGN PROFESSIONAL OF RECORD.

REVISIONS
1
2
3
4

DRAWN BY:	A.V.
SCALE:	AS NOTED
DATE:	01/04/24
PROJECT NO:	1878-24

SHEET TITLE:
TYPICAL ELECTRICAL PLAN

SHEET NUMBER:
E1.0

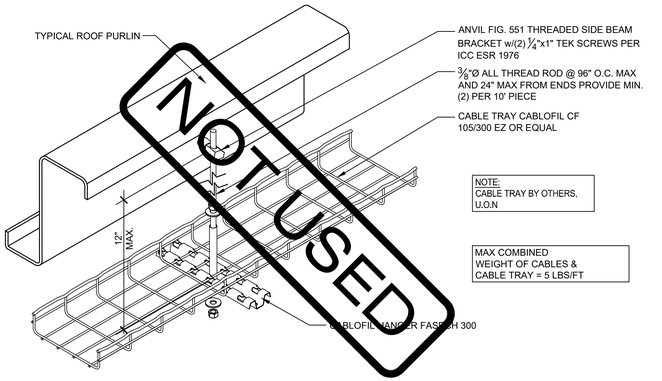

CABLE TRAY DETAIL

SCALE: N.T.S. | 1

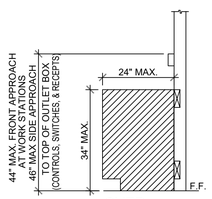

OVER OBSTRUCTION

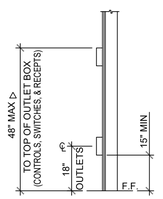

ELECTRICAL MOUNTING HEIGHTS

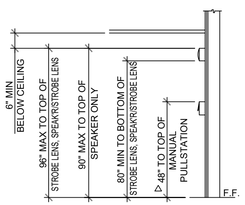

△ PROVIDE MIN 30"x48" CLR FLOOR SPACE FOR PERPENDICULAR APPROACH AT EACH LOCATION

FIRE ALARM MOUNTING HEIGHTS

ACCESSIBLE HEIGHTS

2

250.52 GROUNDING ELECTRODES.

250.52(A) ELECTRODES PERMITTED FOR GROUNDING.

(1) METAL UNDERGROUND WATER PIPE. A METAL UNDERGROUND WATER PIPE IN DIRECT CONTACT WITH THE EARTH FOR 3.0 M (10 FT) OR MORE (INCLUDING ANY METAL WELL CASING BONDED TO THE PIPE) AND ELECTRICALLY CONTINUOUS (OR MADE ELECTRICALLY CONTINUOUS BY BONDING AROUND INSULATING JOINTS OR INSULATING PIPE) TO THE POINTS OF CONNECTION OF THE GROUNDING ELECTRODE CONDUCTOR AND THE BONDING CONDUCTOR(S) OR JUMPER(S), IF INSTALLED.

(2) METAL IN-GROUND SUPPORT STRUCTURE(S). ONE OR MORE METAL IN-GROUND SUPPORT STRUCTURE(S) IN DIRECT CONTACT WITH THE EARTH VERTICALLY FOR 3.0 M (10 FT) OR MORE, WITH OR WITHOUT CONCRETE ENCASEMENT. IF MULTIPLE METAL IN-GROUND SUPPORT STRUCTURES ARE PRESENT AT A BUILDING OR A STRUCTURE, IT SHALL BE PERMISSIBLE TO BOND ONLY ONE INTO THE GROUNDING ELECTRODE SYSTEM.

INFORMATIONAL NOTE: METAL IN-GROUND SUPPORT STRUCTURES INCLUDE, BUT ARE NOT LIMITED TO, PILINGS, CASINGS, AND OTHER STRUCTURAL METAL.

(3) CONCRETE-ENCASED ELECTRODE. A CONCRETE-ENCASED ELECTRODE SHALL CONSIST OF AT LEAST 6.0 M (20 FT) OF EITHER (1) OR (2):

(1) ONE OR MORE BARE OR ZINC GALVANIZED OR OTHER ELECTRICALLY CONDUCTIVE COATED STEEL REINFORCING BARS OR RODS OF NOT LESS THAN 13 MM (1⁄2 IN.) IN DIAMETER, INSTALLED IN ONE CONTINUOUS 6.0 M (20 FT) LENGTH, OR IF IN MULTIPLE PIECES CONNECTED TOGETHER BY THE USUAL STEEL TIE WIRES, EXOTHERMIC WELDING, WELDING, OR OTHER EFFECTIVE MEANS TO CREATE A 6.0 M (20 FT) OR GREATER LENGTH; OR

(2) BARE COPPER CONDUCTOR NOT SMALLER THAN 4 AWG

METALLIC COMPONENTS SHALL BE ENCASED BY AT LEAST 50 MM (2 IN.) OF CONCRETE AND SHALL BE LOCATED HORIZONTALLY WITHIN THAT PORTION OF A CONCRETE FOUNDATION OR FOOTING THAT IS IN DIRECT CONTACT WITH THE EARTH OR WITHIN VERTICAL FOUNDATIONS OR STRUCTURAL COMPONENTS OR MEMBERS THAT ARE IN DIRECT CONTACT WITH THE EARTH. IF MULTIPLE CONCRETE-ENCASED ELECTRODES ARE PRESENT AT A BUILDING OR STRUCTURE, IT SHALL BE PERMISSIBLE TO BOND ONLY ONE INTO THE GROUNDING ELECTRODE SYSTEM.

INFORMATIONAL NOTE: CONCRETE INSTALLED WITH INSULATION, VAPOR BARRIERS, FILMS OR SIMILAR ITEMS SEPARATING THE CONCRETE FROM THE EARTH IS NOT CONSIDERED TO BE IN "DIRECT CONTACT" WITH THE EARTH.

(4) GROUND RING. A GROUND RING ENCIRCLING THE BUILDING OR STRUCTURE, IN DIRECT CONTACT WITH THE EARTH, CONSISTING OF AT LEAST 6.0 M (20 FT) OF BARE COPPER CONDUCTOR NOT SMALLER THAN 2 AWG.

(5) ROD AND PIPE ELECTRODES. ROD AND PIPE ELECTRODES SHALL NOT BE LESS THAN 2.44 M (8 FT) IN LENGTH AND SHALL CONSIST OF THE FOLLOWING MATERIALS.

(A) GROUNDING ELECTRODES OF PIPE OR CONDUIT SHALL NOT BE SMALLER THAN METRIC DESIGNATOR 21 (TRADE SIZE 3⁄4) AND, WHERE OF STEEL, SHALL HAVE THE OUTER SURFACE GALVANIZED OR OTHERWISE METAL-COATED FOR CORROSION PROTECTION.

(B) ROD-TYPE GROUNDING ELECTRODES OF STAINLESS STEEL AND COPPER OR ZINC COATED STEEL SHALL BE AT LEAST 15.87 MM (5⁄8 IN.) IN DIAMETER, UNLESS LISTED.

(6) OTHER LISTED ELECTRODES. OTHER LISTED GROUNDING ELECTRODES SHALL BE PERMITTED.

(7) PLATE ELECTRODES. EACH PLATE ELECTRODE SHALL EXPOSE NOT LESS THAN 0.186 M2 (2 FT2) OF SURFACE TO EXTERIOR SOIL. ELECTRODES OF BARE OR ELECTRICALLY CONDUCTIVE COATED IRON OR STEEL PLATES SHALL BE AT LEAST 6.4 MM (1⁄4 IN.) IN THICKNESS. SOLID, UNCOATED ELECTRODES OF NONFERROUS METAL SHALL BE AT LEAST 1.5 MM (0.06 IN.) IN THICKNESS.

(8) OTHER LOCAL METAL UNDERGROUND SYSTEMS OR STRUCTURES. OTHER LOCAL METAL UNDERGROUND SYSTEMS OR STRUCTURES SUCH AS PIPING SYSTEMS, UNDERGROUND TANKS, AND UNDERGROUND METAL WELL CASINGS THAT ARE NOT BONDED TO A METAL WATER PIPE.

(B) NOT PERMITTED FOR USE AS GROUNDING ELECTRODES
THE FOLLOWING SYSTEMS AND MATERIALS SHALL NOT BE USED AS GROUNDING ELECTRODES:

(1) METAL UNDERGROUND GAS PIPING SYSTEMS
(2) ALUMINUM
(3) THE STRUCTURES AND STRUCTURAL REINFORCING STEEL DESCRIBED IN 680.26(B)(1) AND (B)(2)

INFORMATIONAL NOTE:
SEE 250.104(B) FOR BONDING REQUIREMENTS OF GAS PIPING.

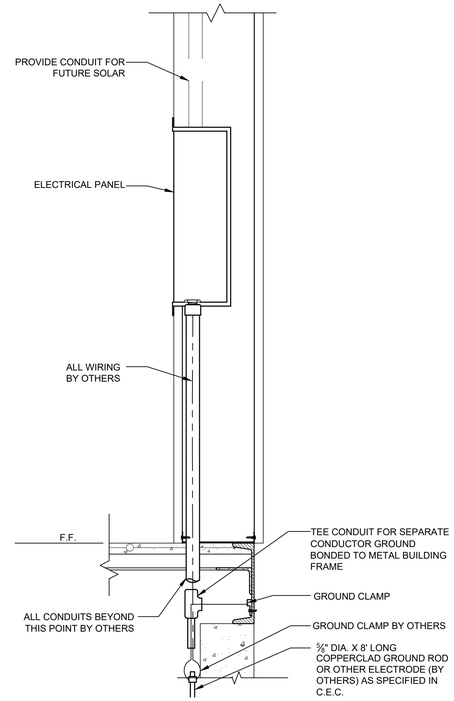

1. SIZE OF CONDUCTORS SHALL COMPLY w/CEC.A
2. BOND SEPARATE CONDUCTORS FROM GROUND ROD TO ELECTRICAL PANEL & METAL BUILDING FRAME (CEC). IN ADDITION TO THE DETAIL SHOWN ABOVE, BOND THE ELECTRICAL GROUND TO METAL WATER PIPE EMBEDDED AT LEAST 10' INTO THE SOIL IF AVAILABLE (CEC).
3. ELECTRICAL BOND MODULES TOGETHER W/#8 CU @ MODLINE. BY MANUFACTURER. CHECK RESISTANCE TO GROUND. IF RESISTANCE EXCEEDS 25 OHMS, INSTALL ADDITIONAL GROUND RODS (CEC) AS REQUIRED. GROUNDING DETAIL PER DSA IR E-1. INSPECTOR TO WITNESS GROUNDING TEST.

ELECTRICAL PANEL CONNECTION DETAIL - UNDERFLOOR OPTION

SCALE: 1-1/2" = 1' - 0" | 3

Panel:	A			PHASE:		VOLTS:		MAIN (AMPS):				BUSS (AMPS):				LOCATION:	FEED:					MOUNTING:
				SINGLE		120/240		100				125				INTERIOR	OUT BACK - ABOVE FLOOR					RECESSED
OBJECT DESCRIPTION	WATTS PER	QTY	LCL	WATTS A	WATTS B	BRK	POLE	WIRE SIZE	CKT #	LEG A	LEG B	CKT #	WIRE SIZE	POLE	BRK	WATTS A	WATTS B	LCL	QTY	WATTS PER	OBJECT DESCRIPTION
4 ton HVAC	5856	1	x	5856			2	#6	1	X		2	#12	1	20	441			9	49	Interior LED light
4 ton HVAC	5856	/	x		5856	60	/	#6	3		X	4	#12	1	20		75		1	75	Exterior light
Exterior WP Recept	180	1		180		20	1	#12	5	X		6	#12	1	20	900			5	180	Recept
					0				7		X	8	#12	1	20		900		5	180	Recept
				0					9	X		10				0					
					0				11		X	12					0				
				0					13	X		14				0					
					0				15		X	16					0				
				0					17	X		18				0					
					0				19		X	20					0				
	LEG TOTALS			6036	5856											1341	975	LEG TOTALS			
LCL=2928+14208=17136																					
TOTAL WATTS: 17136								LEG BALANCE:			3.8%								TOTAL AMPS:	71.40	

NOTES:
FIRE ALARM DEDICATED CIRCUIT SHALL BE IDENTIFIED WITH A RED MARKED DISCONNECT WITH LOCK-ON CAPABILITY (NFPA 72 10.6.5.2)

* PROVIDE CONDUIT OUT OF PANEL FOR FUTURE SOLAR.

LOAD PANEL CALCULATIONS

FIRE ALARM SYSTEM

1. THE FIRE ALARM SYSTEM SHALL CONFORM TO THE CALIFORNIA ELECTRICAL CODE, CALIFORNIA FIRE CODE AND THE CALIFORNIA BUILDING CODE.
2. INSTALLATION OF THE FIRE ALARM SYSTEM SHALL NOT BE STARTED UNTIL DETAILED PLANS AND SPECIFICATIONS, INCLUDING CALIFORNIA STATE FIRE MARSHAL LISTINGS FOR EACH COMPONENT OF THE SYSTEM, HAVE BEEN APPROVED BY DSA.
3. UPON COMPLETION OF THE INSTALLATION OF THE FIRE ALARM SYSTEM, A SATISFACTORY TEST OF THE ENTIRE SYSTEM SHALL BE MADE IN THE PRESENCE OF THE ENFORCING AGENCY.
4. JUNCTION BOXES - GALVANIZED SHEET METAL, SQUARE OR RECTANGULAR WITH BLANK COVERS. LOCATE ONE BOX AT REAR OF BUILDING NEAR MAIN ELECTRICAL PANEL @ +18" ABOVE FINISH FLOOR FOR FUTURE CONNECTION.
5. COVERS - INSTALL GASKETED, METAL, WATERPROOF, FINISH COVERS AT EXTERIOR LOCATIONS. INSTALL FINISH COVERS AT INTERIOR LOCATIONS.
6. THE AUTOMATIC ALARM SYSTEM SHALL BE INSTALLED, TESTED, AND MAINTAINED IN ACCORDANCE WITH THE STATE FIRE MARSHALL'S REGULATIONS (CBC SEC. 907.2.3) AND THE 2022 EDITION OF NFPA 72.
7. THE LOCATION OF AUTOMATIC DETECTORS, MANUAL STATIONS AND OTHER FIRE ALARM EQUIPMENT AND DEVICES, AS SHOWN ON PLAN, ARE FOR REFERENCE ONLY AND DO NOT CONSTITUTE SHOP DRAWINGS WHICH ARE REQUIRED FOR REVIEW AND APPROVAL.
8. ALARM-INDICATING DEVICES OF A FIRE ALARM SYSTEM INTENDED TO ALERT ALL OCCUPANTS SHALL CAUSE A LEVEL OF AUDIBILITY OF NOT LESS THAN 15 dBA ABOVE THE AVERAGE AMBIENT NOISE LEVELS OR 5dBA ABOVE THE MAXIMUM SOUND LEVEL HAVING A DURATION OF 60 SECONDS, WHICHEVER IS GREATER, MEASURED 5' ABOVE THE FLOOR. AMBIENT NOISE LEVELS MEANS THE LEVEL WHICH CAN NORMALLY BE EXPECTED WHEN THE FACILITY, BUILDING, ROOM, OR AREA IS FUNCTIONING UNDER NORMAL OPERATING OR WORKING CONDITIONS (NFPA 72, SEC. 18.4.1).
9. THE ALARM SYSTEM SHALL ACTIVATE A MEANS OF WARNING THE HEARING IMPAIRED. FLASHING VISUAL WARNINGS SHALL HAVE A FLASH RATE NOT EXCEEDING TWO FLASHES PER SECOND (2 HZ), NOR BE LESS THAN ONE FLASH EVERY SECOND (1 HZ). STROBE SIGNALING DEVICES FOR THE HEARING IMPAIRED SHALL BE STATE FIRE MARSHALL APPROVED AND LISTED (NFPA 72, SEC. 18.5.3).
10. AUTOMATIC FIRE ALARM SYSTEM SHALL TRANSMIT THE ALARM, SUPERVISORY AND TROUBLE SIGNALS TO AN APPROVED SUPERVISING STATION AS REQUIRED BY NFPA 72 CHAPTER 26 AS AMENDED BY ARTICLE 91. THE SUPERVISING STATION SHALL BE LISTED AS EITHER UUFX OR UUJS BY UNDERWRITERS LABORATORY OR SHALL MEET THE REQUIREMENTS OF FACTORY MUTUAL RESEARCH APPROVAL STANDARD 3011. SUPERVISION OF SYSTEM AND LEASED TELEPHONE LINES SHALL BE ARRANGED BY OWNER. IF TESTING RESULTS DETERMINE FIRE ALARM AUDIBILITY DOES NOT MEET 15db OVER AMBIENT NOISE LEVELS, ADDITIONAL FIRE ALARM SIGNALING DEVICES MAY BE REQUIRED BY THE ENFORCING AGENCY.

GENERAL NOTES

1. GROUNDING ELECTRODE CONDUCTOR SIZED PER CEC.
2. PROVIDE BONDS TO BLDG. STEEL & PANEL (#8 CU)
3. PANEL TO LISTED FOR USE AS SERVICE EQUIPMENT.
4. ALL PANELS, SWITCHES, DISCONNECTS, BREAKERS, METERS, AND OTHER ELECTRICAL ELEMENTS SHALL BE PLACED ABOVE THE ELEVATION REQUIRED BY ASCE 24-14, SECTION 7.2.

FIXTURE NOTES:

1. ALL FLUORESCENT LIGHT FIXTURES SHALL HAVE ENERGY SAVING LAMPS AND BALLASTS.
2. LUMINARIES/BALLASTS SHALL BE CERTIFIED PER CALIFORNIA BUILDING CODE, TITLE 24.
3. FLUORESCENT LIGHT FIXTURE TYPE "A" SHALL BE CONTROLLED TO PROVIDE TWO LEVELS OF LIGHTING. SWITCH (SA) SHALL CONTROL THE TWO OUTER LAMPS AND SWITCH (SB) SHALL CONTROL THE TWO INNER LAMPS.
4. ELECTRICAL SERVICE DROP AND CONNECTIONS SUPPLIED BY OTHERS.
5. MANUFACTURER TO PROVIDE STUB-OUT FROM BACK OF ELECTRICAL PANEL THROUGH THE EXTERIOR WALL OR TO BELOW FLOOR FOR RECEIVING EITHER UNDERGROUND OR OVERHEAD SERVICE & FITTING FOR GROUNDING CABLE.
6. ELECTRICAL PANEL BOARD SHALL BE RECESS MOUNTED INSIDE THE BUILDING, SIZED TO ACCOMMODATE ALL CONNECTED LOADS INCLUDING SPACES AS SHOWN. OVERCURRENT PROTECTIVE DEVICES IN THE PANEL BOARDS SHALL HAVE ADEQUATE SHORT CIRCUIT INTERRUPTING CAPACITY. ALL BUSES INCLUDING BUS SHALL BE COPPER OR ALUMINUM.
7. 2X4 FLUORESCENT FIXTURES SHALL HAVE A STEEL FRAME, LENS SHALL BE HINGED AND LOCKED IN PLACE BY TWO LOCKING DEVICES. THE LENS DIFFUSERS SHALL BE KHS, INC. #KSH-2, CAROLITE, INC. #C-12 OR PLASKOLITE, INC. #PL21A. MINIMUM LENS THICKNESS SHALL BE 0.125 INCHES.
8. FLUORESCENT BALLAST SHALL BE ENERGY SAVER WHILE MAINTAINING FULL LIGHT OUTPUT, CLASS "P" EQUIPPED WITH THERMAL PROTECTORS, GUARANTEED AGAINST FAILURE FOR (2) YEARS AND BE REPLACEABLE FROM INSIDE THE FIXTURE.
9. CLOCK - 12" DIAL CLOCK ON CLOCK OUTLET.
   A. CLOCK SHALL BE GENERAL ELECTRIC MODEL 2912 129V 60 CYCLE
   B. CLOCK OUTLET SHALL BE BRYANT #2828 OR EQUAL WITH SEPARABLE HANGING CLIP & APPD RECEPT. THE H.V.A.C. UNIT FEEDER CIRCUIT - PANEL CIRCUIT BREAKER, FEEDER WIRE, UNIT DISCONNECT AND FUSES (WHERE USED) - IS TO BE COORDINATED WITH THE NAME PLATE DATA AT THE TIME OF MANUFACTURE. H.V.A.C. UNITS HAVING KVA RATINGS LARGER THAN THAT INDICATED ON THIS PANEL SCHEDULE WILL NOT BE ALLOWED TO BE INSTALLED ON THIS BUILDING.
   C. IF 60 DEGREES WIRE IS TO BE USED IN THIS INSTALLATION, CALCULATIONS DEMONSTRATING AMPACITY SHALL BE PROVIDED ON THE DRAWING.

GENERAL NOTES

IDENTIFICATION STAMP
DIV. OF THE STATE ARCHITECT
APP: 02-122533 INC:
REVIEWED FOR
SS ☑ FLS ☑ ACS ☑
DATE: 05/22/2024

American Modular Systems
787 Spreckels Ave., Manteca, CA 95336
Phone (209) 825-1921 Fax (209) 825-7018
www.americanmodular.com

INTELLECTUAL-PROPERTY & PROPRIETARY RIGHTS STATEMENT
COPYRIGHT © AMERICAN MODULAR SYSTEMS (AMS)
AMS OWNS ALL COPYRIGHT AND OTHER INTELLECTUAL-PROPERTY AND PROPRIETARY RIGHTS IN THESE DRAWINGS, SPECIFICATIONS, AND THE MATERIAL CONTAINED HEREIN. CERTAIN ELEMENTS SHOWN IN THESE DOCUMENTS ARE REGISTERED TRADEMARKS OF AMS. ALL PATENTABLE MATERIALS CONTAINED IN THESE DOCUMENTS AND ORIGINATING WITH AMS WILL REMAIN THE SOLE PROPERTY OF AMS. THESE DRAWING, SPECIFICATIONS, AND THE MATERIAL CONTAINED HEREIN MAY NOT BE REPRODUCED, TRANSMITTED, COPIED, DISTRIBUTED, MODIFIED, OR OTHERWISE DISPOSED OF (DIRECTLY OR INDIRECTLY) AND MAY NOT BE USED (IN WHOLE OR IN PART) TO ASSIST IN THE CONSTRUCTION, DESIGN, OR OTHER MAKING OF, OR FOR THE PURPOSE OF FURNISHING ANY INFORMATION FOR THE CONSTRUCTION, DESIGN, OR OTHER MAKING OF, ANY BUILDINGS (MODULAR OR OTHERWISE), DRAWINGS, SPECIFICATIONS, PRINTS, APPARATUS, OR PARTS THEREOF, EXCEPT AS EXPRESSLY PERMITTED BY WRITTEN CONSENT OF, OR IN A WRITTEN AGREEMENT WITH, AMS. SUBMITTAL OR DISTRIBUTION TO MEET OFFICIAL REGULATORY REQUIREMENTS WILL NOT BE CONSTRUED AS PUBLICATION IN DEROGATION OF AMS'S COPYRIGHT OR OTHER INTELLECTUAL-PROPERTY OR PROPRIETARY RIGHTS.

PRE-CHECKED SET NAME

30' x 32' THRU 60' x 32'

2GO

SITE SPECIFIC PROJECT NAME

GALT JOINT UESD
VERNON GREER ES
(2) 30'X32' BUILDINGS

MANUFACTURER PROFESSIONAL OF RECORD ON PC

LICENSED ARCHITECT ANDREW PATRICK O'HAGAN No. C12631 Ren. 3-31-25 STATE OF CALIFORNIA

THESE DRAWINGS ARE PRELIMINARY AND NOT FOR CONSTRUCTION UNLESS STAMPED & SIGNED BY THE DESIGN PROFESSIONAL OF RECORD.

REVISIONS
1
2
3
4

DRAWN BY:	A.V.
SCALE:	AS NOTED
DATE:	01/04/24
PROJECT NO:	1878-24

SHEET TITLE:

ELECTRICAL NOTES & DETAILS

SHEET NUMBER:

E1.2

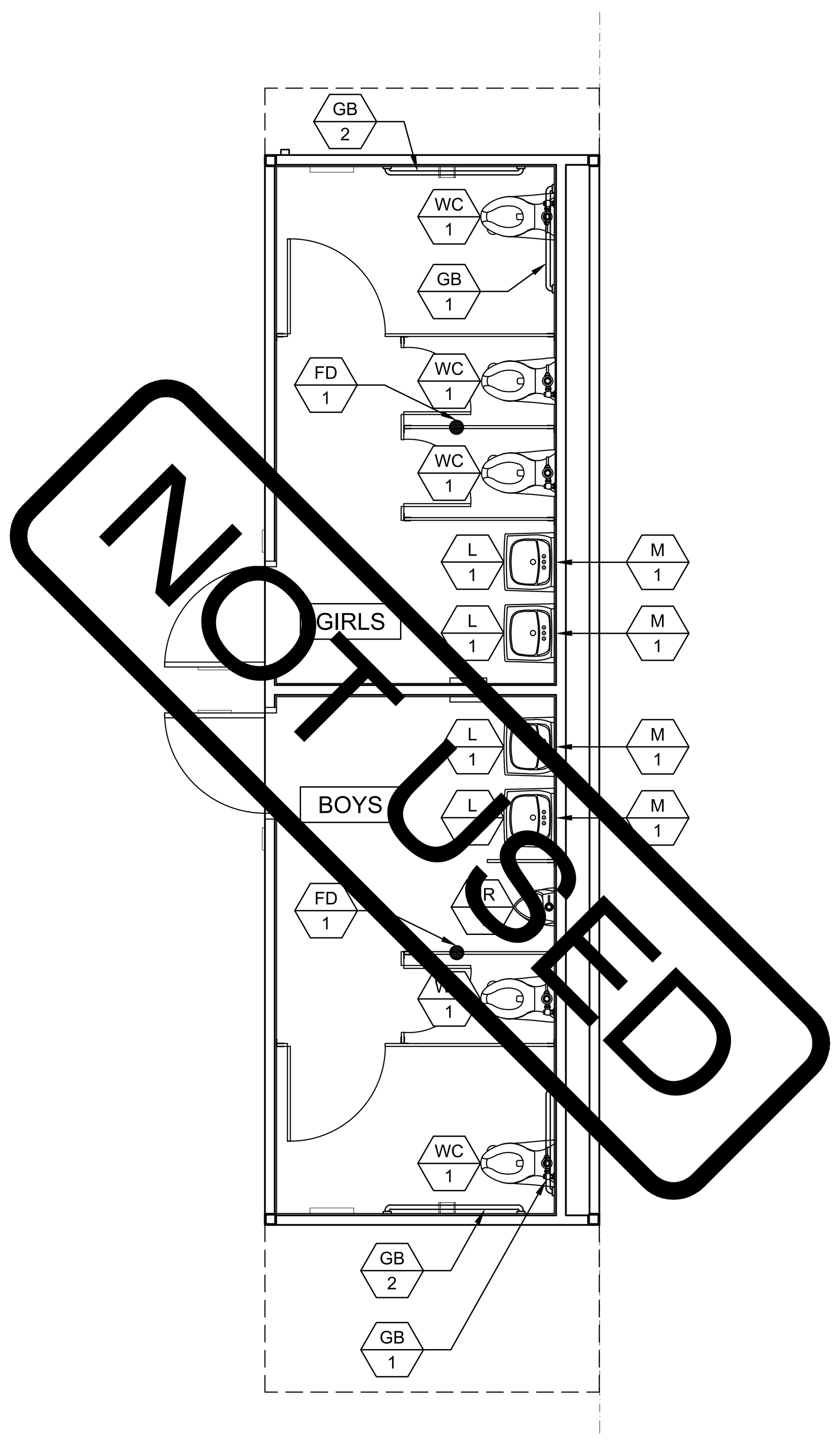

BOYS & GIRLS R.R. PLAN
SCALE : 1/4"=1'-0" 1

MARK	FIXTURE[1]	TYPE AT KINDERGARTEN (AGES 3-4)	TYPE AT ELEMENTARY (AGES 5-8)	TYPE AT MIDDLE SCHOOL (AGES 9-12)	TYPE AT HIGH SCHOOL (AGES 13-ADULT)	REMARKS
WC 1 ACC [2]	WALL MOUNT WATER CLOSET	CANNOT USE	CANNOT USE	KOHLER 'KINGSTON' MODEL K-84325 OR EQUAL. LOWEST AT 16" A.F.F. TO TOP OF SEAT w/BEMIS 1955SSCT TOILET SEAT OR EQUAL	KOHLER 'KINGSTON' MODEL K-84325 OR EQUAL. LOWEST AT 17" A.F.F. TO TOP OF SEAT w/BEMIS 1955SSCT TOILET SEAT OR EQUAL	FLUSH VALVE ZURN MODEL Z6000AV-HET - 1.28 G.P.F OR EQUAL. LOCATE AS SPECIFIED ON FLOOR PLANS. MOUNT ACCESSIBLE FIXTURES PER SCHEDULE 10/P2.0.
WC 2	FLOOR MOUNT TANK TYPE	AMERICAN STANDARD w/BEMIS 1955SSCT OR EQUAL TOILET SET	AMERICAN STANDARD w/2L2050T SEAT (2" THICK) #3128.001 FOR BOWL #4019.228 LEFT TANK #4019.828 RIGHT TANK	KOHLER 'WELLWORTH' MODEL K-3998 OR EQUALw/BEMIS 1955SSCT OR EQUAL TOILET SEAT	KOHLER 'WELLWORTH' MODEL K-3999 OR EQUAL w/BEMIS 1955SSCT OR EQUAL TOILET SEAT	WC/2 FIXTURE MAX FLOW RATE OF 1.28 G.P.F - LOCATE AS SPECIFIED ON FLOOR PLANS. MOUNT ACCESSIBLE FIXTURES PER SCHEDULE 10/P2.0
WC 3 ACC OPTIONAL	FLOOR MOUNT FLUSH VALVE	KOHLER 'PRIMARY' MODEL K-96064 OR EQUAL. w/BEMIS 1955SSCT TOILET SEAT OR EQUAL	KOHLER 'PRIMARY' MODEL K-96064 OR EQUAL w/2L205T (2" THICK) TOILET SEAT OR EQUAL	FLOOR MOUNT FLUSH VALVE TYPE KOHLER 'WELLCOMME ULTRA' MODEL K-96053 OR EQUAL	FLOOR MOUNT FLUSH VALVE TYPE KOHLER 'HIGHCLIFF ULTRA' MODEL K-96057 OR EQUAL	FLUSH VALVE ZURN MODEL Z6000AV-HET - 1.28 G.P.F OR EQUAL. LOCATE AS SPECIFIED ON FLOOR PLANS. MOUNT ACCESSIBLE FIXTURES PER SCHEDULE 10/P2.0.
L 1	BOYS/GIRLS LAVATORY	KOHLER 'KINGSTON' MODEL K-2007-0				BOY/GIRL RESTROOM - ZURN MODEL Z86100-XL-3M - COLD WATER ONLY - SINGLE SPOUT MOUNT AS SPECIFIED IN FLOOR PLANS. MOUNT ACCESSIBLE FIXTURES PER SCHEDULE 10/P2.0 - FLOW RATE OF 0.5 G.P.M. METER FAUCETS SHALL REMAIN OPEN FOR 10 SECONDS MIN.
L 2	ADULT LAVATORY	KOHLER 'KINGSTON' MODEL K-2005-0				ADULT RESTROOM - ZURN MODEL Z7440-XL-FC HOT/COLD WATER - 4" ON CENTER HOLE. MOUNT AS SPECIFIED IN FLOOR PLANS. MOUNT ACCESSIBLE FIXTURES PER SCHEDULE 10/P2.0 - FLOW RATE OF 0.5 G.P.M.
UR 1 ACC	URINAL	WALL MOUNT TYPE KOHLER MODEL DEXTER K-5452-ET-0 OR EQUAL FLOW RATE = 0.125 gpf				FLUSH VALVE ZURN MODEL Z6003-AV (0.125gpf) OR EQUAL. MOUNT AS SPECIFIED IN FLOOR PLANS. MOUNT ACCESSIBLE FIXTURES PER SCHEDULE 10/P2.0
M 1	MIRROR	WALL MOUNT TYPE BOBRICK MODEL B165 18X30 OR EQUAL				MOUNT AS SPECIFIED IN FLOOR PLANS. MOUNT ACCESSIBLE MIRROR PER SCHEDULE 10/P2.0
GB 1	36" GRAB BARS	WALL MOUNT TYPE MOEN MODEL 8736 & 8748 (1 1/4" CONCEALED SCREW 36"& 48") OR EQUAL				18 GA. 304 STAINLESS STEEL SATIN FINISH MOUNT AS SPECIFIED IN FLOOR PLANS AND PER SCHEDULE 10/P2.0. (STRUCTURAL STRENGTH OF GRAB BARS 250# MIN.)
GB 2	48" GRAB BARS					
WH 1	WATER HEATER	RHEEM 20 GALLON ELECTRIC WATER HEATER MODEL PROE20-1-RH-POU 240 VOLT SINGLE PHASE				AVAILABLE IN 6, 10, 20 AND 30 GALLON MODELS (MAX WATER HEATER WEIGHT) PER 6/M1.4 OR 1/P2.0
ITWH 1	INSTANT-TEMP WATER HEATER	CHRONOMITE INSTANT-TEMP WATER HEATER MODEL M20L/240 INSTANT SINGLE PHASE 104°				CHRONOMITE MODEL M20L/208 OR EQUAL SEE DETAIL 7/P2.0
FS 1	CUSTODIAN SINK	FLORESTONE FLOOR SINK MOLDED MOP RECEPTORS MODEL MSR-2424 W/ 3" DRAIN OR EQUAL				ZURN 843-MI-RC OR EQUAL
ULS 1	UTILITY SINK	WALL MOUNT TYPE FLORESTONE FM OR EQUAL				CAITLIN CBK110CP OR EQUAL
FD 1	FLOOR DRAIN	WOOD FLOOR DRAIN SIOUIX CHIEF MODEL MODEL 822-2DNRV OR EQUAL				LOCATE AS SPECIFIED ON FLOOR PLANS. PROVIDE GRATE WITH MAX 1/2" OPENINGS, MEASURED IN BOTH DIRECTIONS
FD 2	FLOOR DRAIN	CONCRETE FLOOR DRAIN ZURN MODEL P415-CC W/ STANDARD GRATE ZURN 33160-002 OR EQUAL				LOCATE AS SPECIFIED ON FLOOR PLANS. (FLOOR DRAIN TO BE USED ON CONCRETE ONLY.) PROVIDE GRATE WITH MAX 1/2" OPENINGS, MEASURED IN BOTH DIRECTIONS
CS 1	CLASSROOM SINK	DAYTON MODEL D12521 25"x21-1/4" SINGLE BOWL SINK OR EQUAL				FAUCET - ZURN MODEL Z2871-B4-XL W/WRIST BLADES. LOCATE AS SPECIFIED ON FLOOR PLANS. MOUNT ACCESSIBLE FIXTURES PER SCHEDULE 10/P2.0
DF 1	DRINKING FOUNTAIN	ELKAY MODEL EDFP217C WALL MOUNT WATER FOUNTAIN OR EQUAL				
HB 1	HOSE BIBB	STANDARD HOSE BIBB ARROWHEAD MODEL 353LKLF OR EQUAL				LOCATE AS SPECIFIED ON FLOOR PLANS.

NOTES:
1. ALL WATER FIXTURES MUST MEET REQUIREMENTS OF CAL-GREEN TITLE 24, PART 11, SECTION 5.303.3 "WATER CONSERVING PLUMBING FIXTURES & FITTINGS".
2. FOR OPTIONAL ACCESSIBLE FLOOR-MOUNT WATER CLOSET, SEE PLUMBING SCHEDULE MARK WC/3 (NOT SHOWN ON PLAN).
3. NOT ALL ITEMS LISTED MAY OCCUR IN THIS PROJECT.
4. THERE SHOULD BE NO SHARP OR ABRASIVE SURFACES UNDER LAVS OR SINKS.
5. REFER TO DETAIL 10/P2.0 FOR SCHEDULE OF ACCESSIBLE HEIGHTS AT FIXTURES.
6. THE FIXTURES SHOWN ON THIS TABLE ARE CBC/ADA COMPLIANT AND WILL BE INSTALLED AT ACCESSIBLE HEIGHTS. SAME FIXTURES ARE USED FOR NON-ACCESSIBLE.

PLUMBING FIXTURE SCHEDULE

PLUMBING NOTE

MODULAR MFR. TO STUB THROUGH FLOOR ALL PLUMBING LINES. BUILDING PERIMETER POC'S SHOWN ARE FOR COORDINATION PURPOSES ONLY. ALL UNDER-FLOOR CONNECTIONS ARE BY SITE CONTRACTOR, U.O.N.

1. DIMENSIONS ARE TO FACE OF FINISH (F.O.F.) UNLESS NOTED OTHERWISE (i.e. F.O.C., ℄)
2. RESTROOM CONFIGURATION MAY VARY PER BUILDING CONFIGURATION.
3. RESTROOM MODULE OCCURS ONLY AT END OF BUILDING. SINGLE RESTROOMS MAY OCCUR IN ANY PART OF A BUILDING.
4. RESTROOM MODULE CANNOT STAND ALONE AND SHALL BE ASSEMBLED TOGETHER WITH AT LEAST TWO OTHER 10'x32' MODULES.
5. INTERIOR WALLS MAY OCCUR THROUGHOUT BUILDING. REFER TO SHEET S8.1 OR S9.1 FOR ATTACHMENTS.
6. REFER TO SCHEDULE 10/P2.0 FOR ACCESSIBLE HEIGHTS AT TOILETS.
7. REFER TO DETAILS 1, 3, & 4, SHEET A7.1 FOR TOILET PARTITION ANCHORAGE BLOCKING.
8. SEWER AND WATER STUB OUTS SHALL BE LOCATED WITHIN THE ALLOWABLE AREA AS SHOWN ON FLOOR PLAN AND CONNECTIONS SHALL BE EASILY ACCESSIBLE FOR FUTURE RELOCATION. STUB OUT HEIGHT SHALL BE COORDINATED BY THE MANUFACTURER.
9. PIPING MATERIAL
   a. WATER: COPPER TYPE "L", 95/5 SOLDER.
   b. WASTE DRAIN AND VENT: ABS.'
10. PLANS SHALL MEET ENERGY CODE 120.3 FOR PIPE INSULATION. ALL WATER HEATERS SHALL HAVE R7.7 ON HOT AND COLD LINES FOR THE FIRST 8 FEET FROM WATER HEATER (TANK TYPE AND INSTANT). SECTION 609.12 REQUIRES HOT WATER PIPING FROM THE WATER HEATER TO THE FIXTURE (CONTROL VALVE) BE INSULATED TO A MINIMUM WALL THICKNESS OF NOT LESS THAN THE DIAMETER OF THE PIPE FOR A PIPE UP TO 2 INCHES (50 MM) IN DIAMETER. INSULATION WALL THICKNESS SHALL BE NOT LESS THAN 2 INCHES (51 MM) FOR A PIPE OF 2 INCHES (50 MM) OR MORE IN DIAMETER.
11. PER PLUMBING CODE 609.12 UPDATE PLANS TO SHOW HOW THE HOT WATER PIPING IS INSULATED FROM THE WATER HEATER TO THE FIXTURE (CONTROL VALVE) TO A MINIMUM WALL THICKNESS OF NOT LESS THAN THE DIAMETER OF THE PIPE.
12. INSTANTANEOUS WATER HEATERS WITH AN INPUT GREATER THAN 6.8 KBTU/H OR 2 KW (ALL INSTANTANEOUS ARE OVER 4KW) SHALL HAVE ISOLATION VALVES ON BOTH THE INCOMING COLD WATER SUPPLY AND THE HOT WATER PIPE LEAVING THE WATER HEATER, TO ASSIST IN THE FLUSHING OF THE HEAT EXCHANGER AND HELP PROLONG THE LIFE THE WATER HEATERS ENERGY CODE 110.3(C).

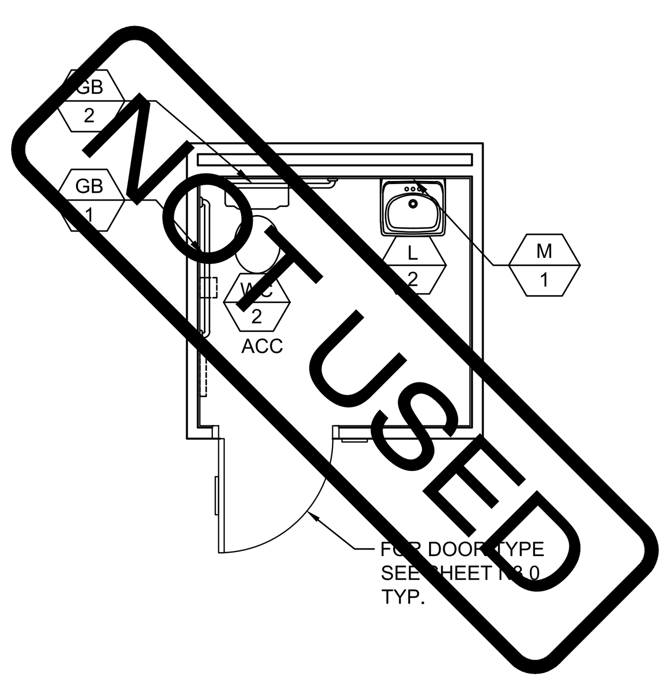

SINGLE TOILET PLAN
FRONT WALL APPROACH
SCALE : 1/4"=1'-0" 3

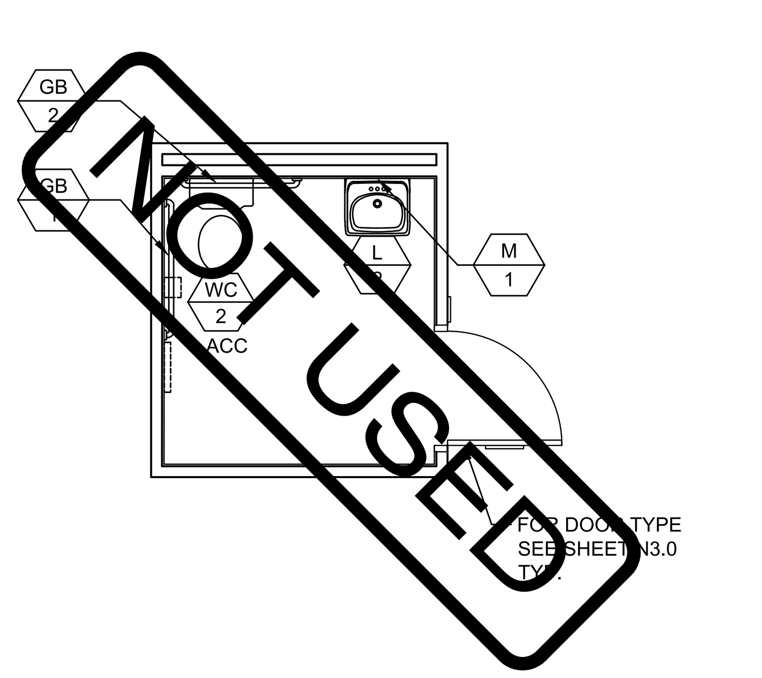

SINGLE TOILET PLAN
SIDE WALL APPROACH
SCALE : 1/4"=1'-0" 4

A 1 = PLUMBING FIXTURE I.D. - SEE SCHEDULE ABOVE

SYMBOLS LEGEND

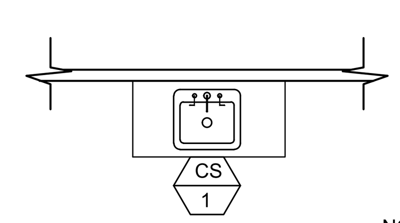

NOTE: SEE DETAIL 8/P2.0 FOR SECTION THROUGH SINK/COUNTER

CLASSROOM SINK PLAN
SCALE : 1/4"=1'-0" 5

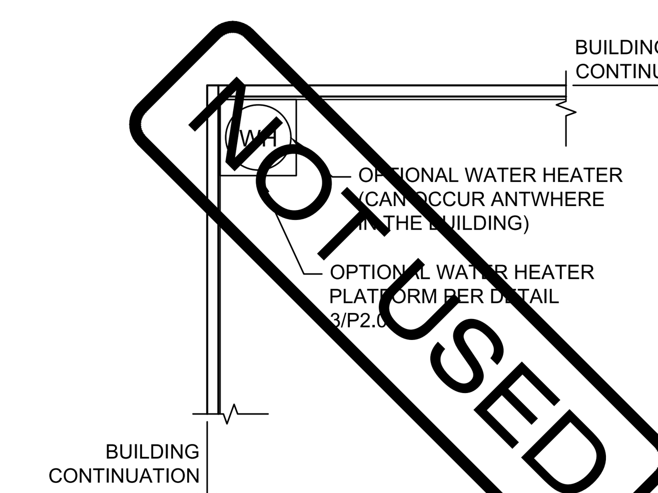

OPTIONAL WATER HEATER
SCALE : 1/4"=1'-0" 6

GENERAL NOTES

IDENTIFICATION STAMP
DIV. OF THE STATE ARCHITECT
APP: 02-122533 INC:
REVIEWED FOR
SS ☑ FLS ☑ ACS ☑
DATE: 05/22/2024

American Modular Systems
787 Spreckels Ave., Manteca, CA 95336
Phone (209) 825-1921 Fax (209) 825-7018
www.americanmodular.com

INTELLECTUAL-PROPERTY & PROPRIETARY RIGHTS STATEMENT
COPYRIGHT © AMERICAN MODULAR SYSTEMS (AMS)
AMS OWNS ALL COPYRIGHT AND OTHER INTELLECTUAL-PROPERTY AND PROPRIETARY RIGHTS IN THESE DRAWINGS, SPECIFICATIONS, AND THE MATERIAL CONTAINED HEREIN. CERTAIN ELEMENTS SHOWN IN THESE DOCUMENTS ARE REGISTERED TRADEMARKS OF AMS. ALL PATENTABLE MATERIALS CONTAINED IN THESE DOCUMENTS AND ORIGINATING WITH AMS WILL REMAIN THE SOLE PROPERTY OF AMS. THESE DRAWING, SPECIFICATIONS, AND THE MATERIAL CONTAINED HEREIN MAY NOT BE REPRODUCED, TRANSMITTED, COPIED, DISTRIBUTED, MODIFIED, OR OTHERWISE DISPOSED OF (DIRECTLY OR INDIRECTLY) AND MAY NOT BE USED (IN WHOLE OR IN PART) TO ASSIST IN THE CONSTRUCTION, DESIGN, OR OTHER MAKING OF, OR FOR THE PURPOSE OF FURNISHING ANY INFORMATION FOR THE CONSTRUCTION, DESIGN, OR OTHER MAKING OF, ANY BUILDINGS (MODULAR OR OTHERWISE), DRAWINGS, SPECIFICATIONS, PRINTS, APPARATUS, OR PARTS THEREOF, EXCEPT AS EXPRESSLY PERMITTED BY WRITTEN CONSENT OF, OR IN A WRITTEN AGREEMENT WITH, AMS. SUBMITTAL OR DISTRIBUTION TO MEET OFFICIAL REGULATORY REQUIREMENTS WILL NOT BE CONSTRUED AS PUBLICATION IN DEROGATION OF AMS'S COPYRIGHT OR OTHER INTELLECTUAL-PROPERTY OR PROPRIETARY RIGHTS.

PRE-CHECKED SET NAME
30' x 32' THRU 60' x 32'
2GO®

SITE SPECIFIC PROJECT NAME
.
.
.

APPROVED
DIV. OF THE STATE ARCHITECT
APP: 04-122041 PC
REVIEWED FOR
SS ☑ FLS ☑ ACS ☑ CG ☑
DATE: 04/05/2024

☐ 2022 CBC PRE-CHECK (PC) DOCUMENT
A SEPARATE PROJECT APPLICATION FOR CONSTRUCTION IS REQUIRED.

MANUFACTURER PROFESSIONAL OF RECORD ON PC

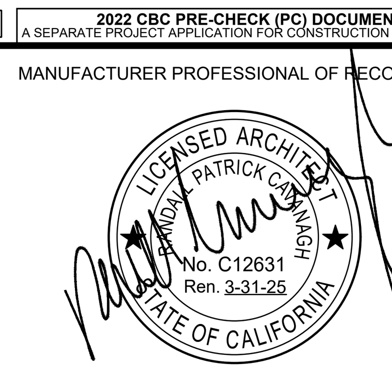

THESE DRAWINGS ARE PRELIMINARY AND NOT FOR CONSTRUCTION UNLESS STAMPED & SIGNED BY THE DESIGN PROFESSIONAL OF RECORD.

REVISIONS
△1
△2
△3
△4

DRAWN BY:	A.A.
SCALE:	AS NOTED
DATE:	DD/MM/YY
PROJECT NO:	XXXX-XX

SHEET TITLE:
RESTROOM OPTION
PLUMBING PLANS
& FIXTURE SCHEDULE

SHEET NUMBER:
P1.0

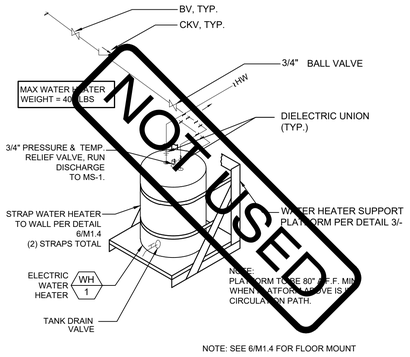

NOTE: SEE 6/M1.4 FOR FLOOR MOUNT

WATER HEATER SUPPORT DETAIL — NOT TO SCALE — 1

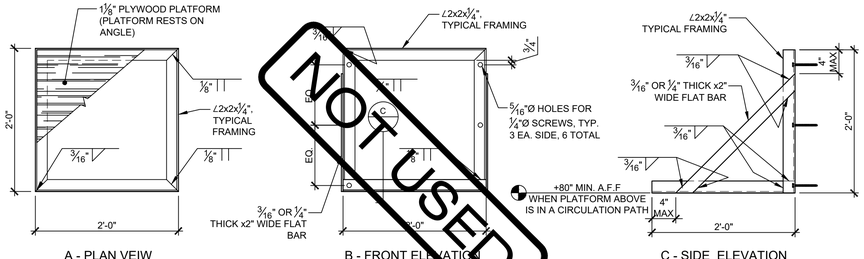

A - PLAN VEIW

B - FRONT ELEVATION

C - SIDE ELEVATION

MAX WATER HEATER WEIGHT = 400 LBS

ATTACHMENT TO WOOD STUD WALL
ATTACH TO (2) 3x FLAT PER 3/S8.1 INTERNAILED w/ 0.131"Ø x3" NAILS @ 12" O.C. STAGGERED w/ (3) ¼"Ø MIN. x4" LAG SCREWS EACH SIDE (2½" MIN. PENETRATION INTO WOOD FRAMING).
CENTER ATTACHMENTS ON ONE OF THE TWO DOUBLE STUDS.
MAY BE ATTACHED TO EXTERIOR WALL OR INTERIOR PARTITION WALL.

ATTACHMENT TO STUD WALL
MAY BE ATTACHED TO EXTERIOR WALL OR INTERIOR PARTITION WALL.
PLATFORM NOT INTENDED TO BE INSTALLED OVER RIGID WALL INSULATION AS DETAILED.

WATER HEATER PLATFORM DETAIL — NOT TO SCALE — 3

HEIGHTS FOR ACCESSIBLE FEATURES IN TOILET FACILITIES

	FIXTURE & MEASUREMENT POINT	PRIMARY USERS				NOTES
		AGES 3-4	AGES 5-8	AGES 9-12	AGES 13 -ADULT	
A	TOILET OFFSET, CENTERLINE FROM FACE OF WALL	12"	12" - 15"	15" - 18"	17" - 18"	
B	TOILET SEAT HEIGHT	11" - 12"	12" - 15"	15" - 17"	17" - 19"	
C	TOILET CONTROLS (TOP OF FLUSH)	36" MAX.	36" MAX.	36" MAX.	44" MAX.	FLUSH CONTROLS SHALL BE LOCATED ON OPEN SIDE OF TOILET.
D	TOP OF GRAB BARS GRIPPING SURFACE	18" - 20"	20" - 25"	25" - 27"	33" - 36"	
E	TOILET PAPER DISPENSER OUTLET (A.F.F., TO CENTERLINE OF OUTLET OR ROLL)	14"	14" - 17"	17" - 19"	19" MIN.	CENTERLINE OF DISPENSER OUTLET SHALL BE BETWEEN 7" TO 9" IN FRONT OF THE TOILET. OUTLET OF DISPENSER MUST BE BELOW GRAB BAR. DISPENSER (INCLUDING FULL TOILET PAPER ROLL) MUST NOT ENCROACH INTO REQ'D GRAB BAR CLEARANCE.
F	TOILET SEAT COVER DISPENSER, HEIGHT TO TOP OF OUTLET	24" - 32"	30" - 32"	32" - 36"	40" MAX.	
G	URINAL HEIGHT (LIP HEIGHT)	12" - 13" SUGGESTED (17" MAX.)	13" - 15" SUGGESTED (17" MAX.)	15" - 17" SUGGESTED (17" MAX.)	17" MAX.	
H	URINAL FLUSH CONTROL HEIGHT	44" MAX.	44" MAX.	44" MAX.	44" MAX.	
I	LAV/SINK RIM HEIGHT OR COUNTER	★★ 24" - 28" SUGGESTED (31 MAX.)	★ 31" MAX.	★ 31" MAX.	34" MAX.	★ NO BUBBLERS SHALL BE PROVIDED IN THESE AGE GROUPS ★★ (IF COUNTER IS HIGHER THAN 27" NO BUBBLERS SHALL BE INSTALLED
J	LAV/SINK KNEE CLEARANCE	SIDE APPROACH	AGE 6-8, 24" MIN. (AGE 5, SIDE APPROACH)	24" MIN.	27" MIN. (29" MIN. AT APRON FOR LAVATORY)	29" MIN TO BOTTOM FRONT EDGE OF LAV; 27" MIN @ 8" DEEP
K	MIRROR (ABOVE LAVATORY, SINK OR COUNTERTOP), LOWEST POINT OF REFLECTIVE SURFACE	24" - 32" SUGGESTED (40" MAX.)	30" - 32" SUGGESTED (40" MAX.)	32" - 36" SUGGESTED (40" MAX.)	40" MAX.	MIRROR NOT LOCATED ABOVE LAVATORY OR COUNTERTOP SHALL BE MOUNTED SO THAT LOWEST EDGE OF REFLECTING SURFACE IS 35" MAX. ABOVE FINISH FLOOR.
L	DISPENSERS, DRYERS, HEIGHT TO TOP OF OUTLET, HANDLE OR OPERATING MECHANISM (WHICHEVER IS HIGHEST)	24" - 32" SUGGESTED (40" MAX.)	30" - 32" SUGGESTED (40" MAX.)	32" - 36" SUGGESTED (40" MAX.)	40" MAX	ACCESSORIES SHALL COMPLY WITH 11B-307.2
M	LO DRINKING FOUNTAIN, HEIGHT TO BUBBLER	30" MAX.*	30" MAX. *	30" MAX. *	36" MAX.	KNEE CLEARANCE 27" H. AT 8" DEEP IS REQ'D IF HIGHER THAN 30" A.F.F.
N	HI DRINKING FOUNTAIN, HEIGHT TO BUBBLER	38" - 43"	38" - 43"	38" - 43"	38" - 43"	

NOTES:
1. THIS TABLE AND RELATED DIAGRAMS ILLUSTRATE THE SPECIFIC REQUIREMENTS OF CALIF. TITLE 24 (2022 C.B.C. SECTION 11B-601) AND IS SHOWN HERE ONLY AS AN AID FOR CONSTRUCTION AND INSTALLATION.
2. ACCESSORIES ARE NOT IN MANUFACTURER'S SCOPE OF WORK.
3. DIMENSIONS GIVEN ARE FROM FACE OF FINISH, UNLESS OTHERWISE NOTED.
4. NOT ALL ITEMS LISTED MAY OCCUR IN THE PROJECT.
5. HEIGHTS CHOSEN FOR CHILDREN'S WATER CLOSETS & ACCESSORIES D & E SHALL BE CONSISTENTLY APPLIED FOR THE AGE GROUP.

M* WHERE A D.F. FOR CHILDREN IS MOUNTED MAXIMUM 30" A.F.F., THE SPOUT SHALL BE MAXIMUM 3-1/2" FROM THE FRONT EDGE OF THE UNIT

ACCESSIBLE HEIGHTS TABLE — 10

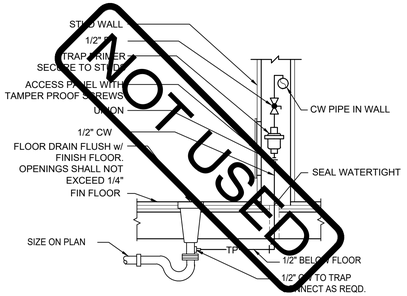

TRAP PRIMER DETAIL — NOT TO SCALE — 6

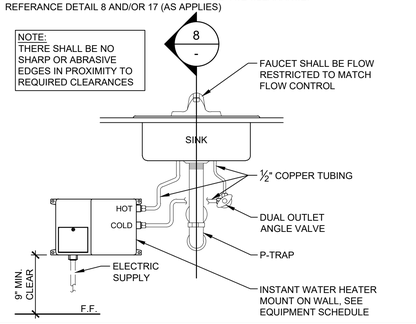

NOTE:
INSULATE WATER SUPPLY AND DRAIN PIPING AT ACCESSIBLE SINKS OR LAVS WITH "TRUEBRO® LAV GUARD 2" OR "TRUEBRO® SOFT GUARD PLUS" SHIELDS
IWH SHALL NOT BE LOCATED IN THE REQUIRED TOE CLEARANCE.
REFERANCE DETAIL 8 AND/OR 17 (AS APPLIES)

NOTE:
THERE SHALL BE NO SHARP OR ABRASIVE EDGES IN PROXIMITY TO REQUIRED CLEARANCES

INSTANT WATER HEATER DETAIL — NOT TO SCALE — 7

DIM 'A'	DIM 'B'	DIM 'C'	DIM 'D'
17"	8"	11"	17"
18"	9"	12"	18"
19"	10"	13"	19"
20"	11"	14"	20"
21"	12"	15"	21"
22"	13"	16"	22"
23"	14"	17"	23"
24"	15"	18"	24"
25"	16"	19"	25"

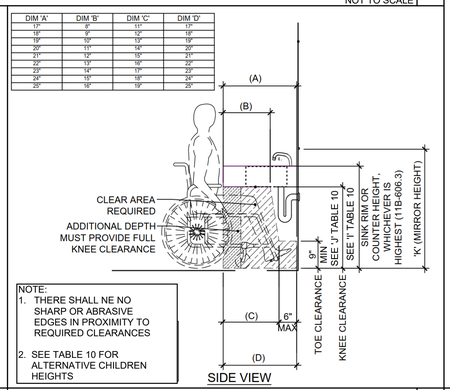

NOTE:
1. THERE SHALL NE NO SHARP OR ABRASIVE EDGES IN PROXIMITY TO REQUIRED CLEARANCES
2. SEE TABLE 10 FOR ALTERNATIVE CHILDREN HEIGHTS

ACCESSIBLE CLASSROOM SINK — NOT TO SCALE — 8

NOTES:
1. ALL DRINKING FOUNTAINS SHALL BE LOCATED COMPLETELY WITHIN ALCOVES, BETWEEN WING WALLS, OR OTHERWISE POSITIONED SO AS NOT TO ENCROACH INTO PEDESTRIAN WAYS (PER C.B.C. SECTION 11B-602.9), AND SHALL BE ACCESSIBLE PER 11B-206.5, SHALL BE APPROACHABLE PER SECTION 11B-305.6 AND HAVE MANEUVERING CLEARANCES PER SECTION 11B-305.7.
2. THE ACCESSIBLE FOUNTAIN SHALL HAVE A 30"X48" CLEAR FLOOR SPACE, WITH KNEE AND TOE CLEARANCE POSITIONED FOR FORWARD APPROACH MIN. 17" UNDER AND CENTERED ON THE UNIT. (11B-602.2, 11B-306.3)
3. SEE PLUMBING NOTES 20/-

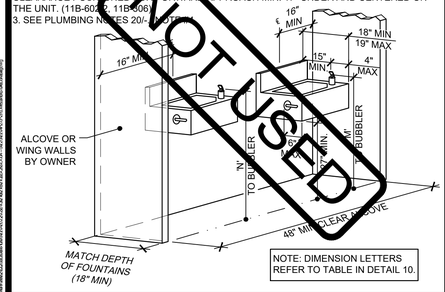

NOTE: DIMENSION LETTERS REFER TO TABLE IN DETAIL 10.

HI-LO DRINKING FOUNTAIN — NOT TO SCALE — 11

NOTES:
1. MODIFY BASE AS SHOWN FOR ADULT WHEELCHAIR ACCESS.
2. CABINET IS FOR ADULT USE ONLY.
3. ALL EXTERIOR SURFACES TO BE PLASTIC LAMINATE.
4. CABINET DOORS ARE NOT ALLOWED @ SINKS.
5. THERE SHALL BE NO SHARP OR ABRASIVE EDGES IN PROXIMITY TO REQUIRED CLEARANCES.

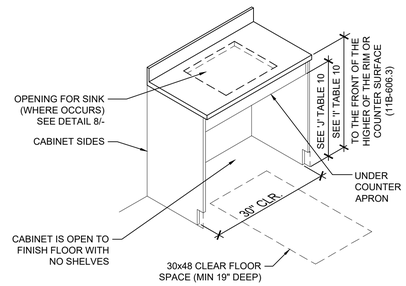

ACCESSIBLE CABINET DETAIL — NOT TO SCALE — 12

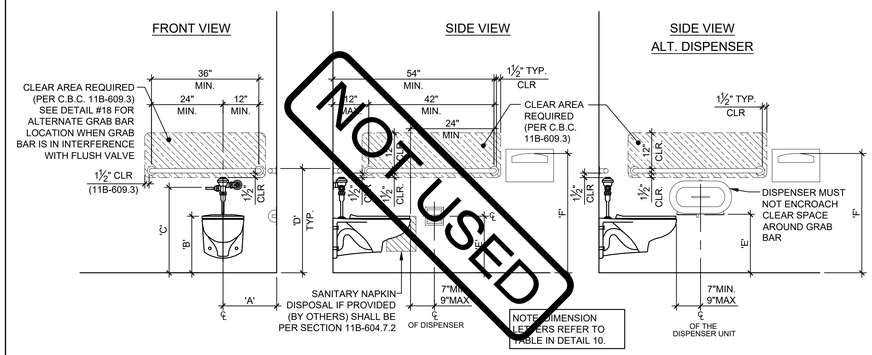

ACCESSIBLE TOILET AND ACCESSORIES — SCALE: 1/2" = 1'-0" — 14

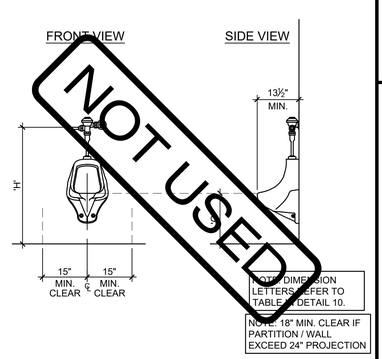

ACCESSIBLE URINAL — SCALE: 1/2" = 1'-0" — 15

1. DWV PIPING SHALL BE ABS PLASTIC
2. COLD WATER SUPPLY SHALL BE TYPE L COPPER
3. MIN SLOPE 1/4" PER FOOT MAY SLOPE 4" CI AT 1/8" PER FOOT VENTS SHALL TERMINATE NOT LESS THAN 10 FEET FROM OR AT LEAST 3 FT. ABOVE ANY WINDOW, DOOR, AIR INTAKE OR VENT SHAFT, NOR LESS THAN 3FT. IN EVERY DIRECTION FROM ANY LOT LINE; ALLEY AND STREET EXCEPTED; EXTEND 6" ABOVE THE ROOF
4. 11B-602.6 WATER FLOW: IF THE SPOUT IS LOCATED LESS THAN 3 INCHES FROM THE FRONT OF THE UNIT, THE ANGLE OF THE STREAM SHALL BE 30 DEGREES MAXIMUM. WHERE LOCATED BETWEEN 3 INCHES AND 5 INCHES FROM THE FRONT OF THE UNIT, THE ANGLE OF THE STREAM SHALL BE 15 DEGREES MAXIMUM RELATIVE TO THE FRONT FACE (ORIENTATION OF WALL SURFACE).

PLUMBING NOTES — 19

DIM 'A'	DIM 'B'	DIM 'C'	DIM 'D'
17"	8"	11"	17"
18"	9"	12"	18"
19"	10"	13"	19"
20"	11"	14"	20"
21"	12"	15"	21"
22"	13"	16"	22"
23"	14"	17"	23"
24"	15"	18"	24"
25"	16"	19"	25"

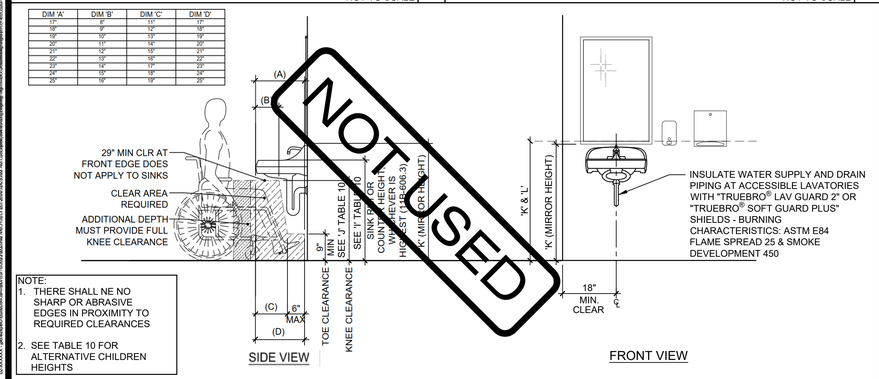

NOTE:
1. THERE SHALL NE NO SHARP OR ABRASIVE EDGES IN PROXIMITY TO REQUIRED CLEARANCES
2. SEE TABLE 10 FOR ALTERNATIVE CHILDREN HEIGHTS

LAVATORY & ACCESSORIES — SCALE: 1/2" = 1'-0" — 17

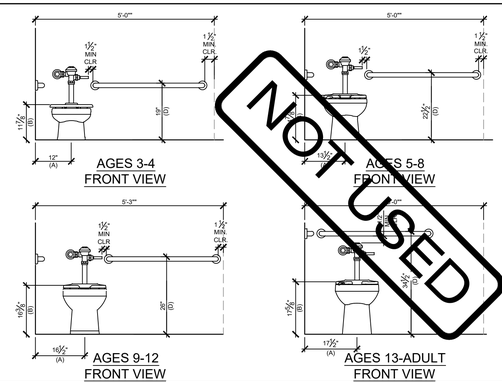

WHERE AN ADMINISTRATIVE AUTHORITY REQUIRES FLUSH CONTROLS FOR FLUSH VALVES TO BE LOCATED IN A POSITION THAT CONFLICTS WITH THE LOCATION OF THE REAR GRAB BAR, THEN THE REAR GRAB BAR SHALL BE PERMITTED TO BE SPLIT OR SHIFTED TO THE OPEN SIDE OF THE TOILET AREA.

(PER CBC 11B-604.5.2 EXCEPTION 2)

NOTES:
1. DIMENSION LETTERS REFER TO TABLE IN DETAIL 10.
2. AT LOCATIONS WHERE GRAB BAR MAY BE LOWER IT MUST CLEAR THE FLUSH VALVE HANDLE AS SHOWN

ALTERNATE GRAB BAR SHIFT DETAIL — SCALE: 1/2" = 1'-0" — 18

IDENTIFICATION STAMP
DIV. OF THE STATE ARCHITECT
APP: 02-122533 INC:
REVIEWED FOR
SS ☑ FLS ☑ ACS ☑
DATE: 05/22/2024

AMS®
American Modular Systems
787 Spreckels Ave., Manteca, CA 95336
Phone (209) 825-1921 Fax (209) 825-7018
www.americanmodular.com

INTELLECTUAL-PROPERTY & PROPRIETARY RIGHTS STATEMENT
COPYRIGHT © AMERICAN MODULAR SYSTEMS (AMS)
AMS OWNS ALL COPYRIGHT AND OTHER INTELLECTUAL-PROPERTY AND PROPRIETARY RIGHTS IN THESE DRAWINGS, SPECIFICATIONS, AND THE MATERIAL CONTAINED HEREIN. CERTAIN ELEMENTS SHOWN IN THESE DOCUMENTS ARE REGISTERED TRADEMARKS OF AMS. ALL PATENTABLE MATERIALS CONTAINED IN THESE DOCUMENTS AND ORIGINATING WITH AMS WILL REMAIN THE SOLE PROPERTY OF AMS. THESE DRAWING, SPECIFICATIONS, AND THE MATERIAL CONTAINED HEREIN MAY NOT BE REPRODUCED, TRANSMITTED, COPIED, DISTRIBUTED, MODIFIED, OR OTHERWISE DISPOSED OF (DIRECTLY OR INDIRECTLY) AND MAY NOT BE USED (IN WHOLE OR IN PART) TO ASSIST IN THE CONSTRUCTION, DESIGN, OR OTHER MAKING OF, OR FOR THE PURPOSE OF FURNISHING ANY INFORMATION FOR THE CONSTRUCTION, DESIGN, OR OTHER MAKING OF, ANY BUILDINGS (MODULAR OR OTHERWISE), DRAWINGS, SPECIFICATIONS, PRINTS, APPARATUS, OR PARTS THEREOF, EXCEPT AS EXPRESSLY PERMITTED BY WRITTEN CONSENT OF, OR IN A WRITTEN AGREEMENT WITH, AMS. SUBMITTAL OR DISTRIBUTION TO MEET OFFICIAL REGULATORY REQUIREMENTS WILL NOT BE CONSTRUED AS PUBLICATION IN DEROGATION OF AMS'S COPYRIGHT OR OTHER INTELLECTUAL-PROPERTY OR PROPRIETARY RIGHTS.

PRE-CHECKED SET NAME

30' x 32' THRU 60' x 32'

2GO®

SITE SPECIFIC PROJECT NAME

APPROVED
DIV. OF THE STATE ARCHITECT
APP: 04-122041 PC
REVIEWED FOR
SS ☑ FLS ☑ ACS ☑ CG ☑
DATE: 04/05/2024

☐ 2022 CBC PRE-CHECK (PC) DOCUMENT
A SEPARATE PROJECT APPLICATION FOR CONSTRUCTION IS REQUIRED.

MANUFACTURER PROFESSIONAL OF RECORD ON PC

LICENSED ARCHITECT — ANDREW PATRICK KNIGHT — No. C12631 — Ren. 3-31-25 — STATE OF CALIFORNIA

THESE DRAWINGS ARE PRELIMINARY AND NOT FOR CONSTRUCTION UNLESS STAMPED & SIGNED BY THE DESIGN PROFESSIONAL OF RECORD.

REVISIONS
1
2
3
4

DRAWN BY:	A.A.
SCALE:	AS NOTED
DATE:	DD/MM/YY
PROJECT NO:	XXXX-XX

SHEET TITLE:

PLUMBING DETAILS & ACCESSIBLE DETAILS

SHEET NUMBER:

P2.0